This is a digital copy of a book that was preserved for generations on library shelves before it was carefully scanned by Google as part of a project to make the world's books discoverable online.

It has survived long enough for the copyright to expire and the book to enter the public domain. A public domain book is one that was never subject to copyright or whose legal copyright term has expired. Whether a book is in the public domain may vary country to country. Public domain books are our gateways to the past, representing a wealth of history, culture and knowledge that's often difficult to discover.

Marks, notations and other marginalia present in the original volume will appear in this file - a reminder of this book's long journey from the publisher to a library and finally to you.

Usage guidelines

Google is proud to partner with libraries to digitize public domain materials and make them widely accessible. Public domain books belong to the public and we are merely their custodians. Nevertheless, this work is expensive, so in order to keep providing this resource, we have taken steps to prevent abuse by commercial parties, including placing technical restrictions on automated querying.

We also ask that you:

+ *Make non-commercial use of the files* We designed Google Book Search for use by individuals, and we request that you use these files for personal, non-commercial purposes.

+ *Refrain from automated querying* Do not send automated queries of any sort to Google's system: If you are conducting research on machine translation, optical character recognition or other areas where access to a large amount of text is helpful, please contact us. We encourage the use of public domain materials for these purposes and may be able to help.

+ *Maintain attribution* The Google "watermark" you see on each file is essential for informing people about this project and helping them find additional materials through Google Book Search. Please do not remove it.

+ *Keep it legal* Whatever your use, remember that you are responsible for ensuring that what you are doing is legal. Do not assume that just because we believe a book is in the public domain for users in the United States, that the work is also in the public domain for users in other countries. Whether a book is still in copyright varies from country to country, and we can't offer guidance on whether any specific use of any specific book is allowed. Please do not assume that a book's appearance in Google Book Search means it can be used in any manner anywhere in the world. Copyright infringement liability can be quite severe.

About Google Book Search

Google's mission is to organize the world's information and to make it universally accessible and useful. Google Book Search helps readers discover the world's books while helping authors and publishers reach new audiences. You can search through the full text of this book on the web at `http://books.google.com/`

LIBRARY OF THE
Leland Stanford Junior University
NOT TO BE TAKEN OUT OF THE LIBRARY

Digitized by Google

Digitized by Google

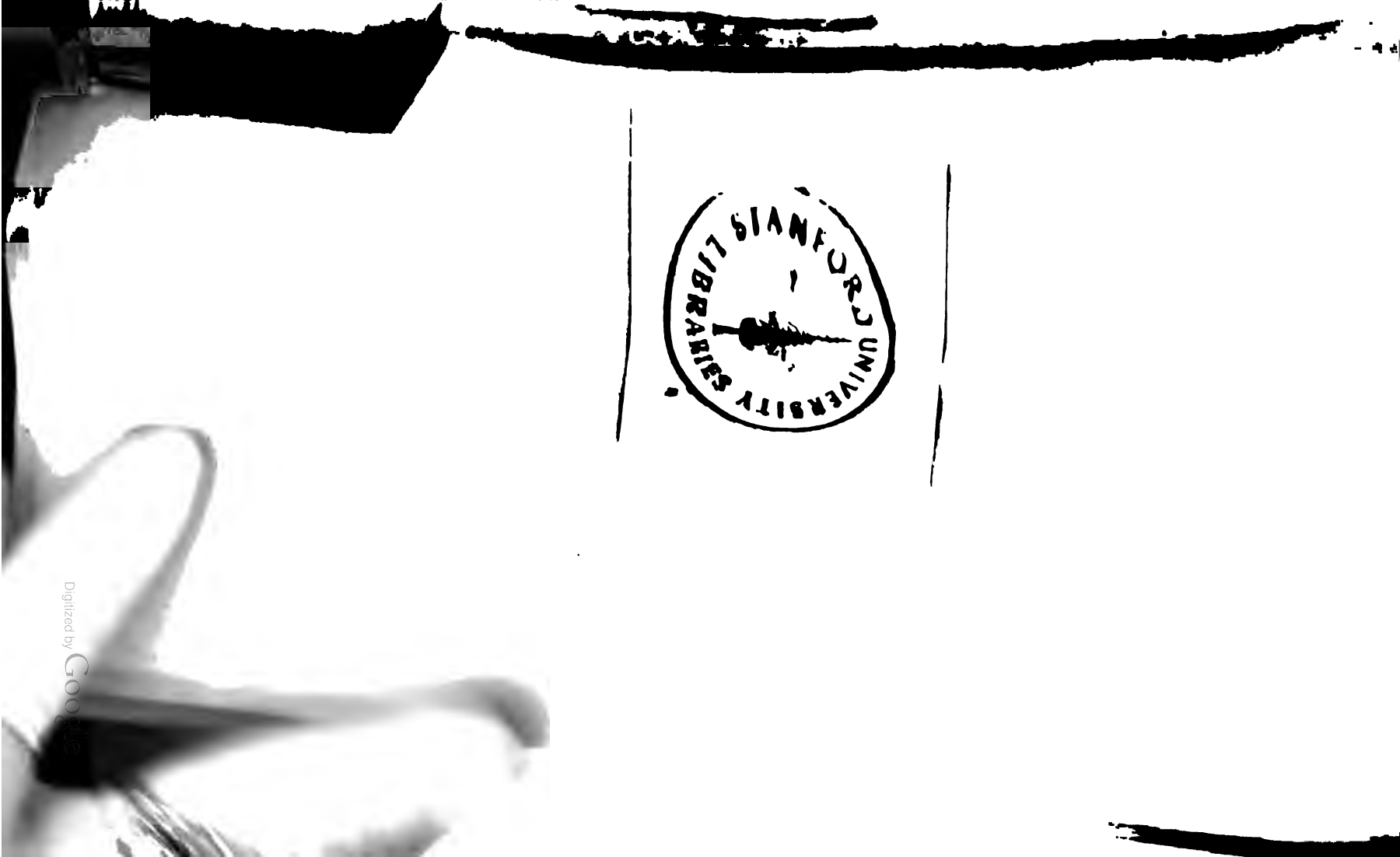
STANFORD UNIVERSITY LIBRARIES
Digitized by Google

Digitized by Google

Digitized by Google

Digitized by Google

Engineering Library
HISTORICAL COLLECTION

TRANSACTIONS

OF THE

AMERICAN SOCIETY

OF

MECHANICAL ENGINEERS.

VOL. XVI.

XXXTH MEETING, NEW YORK, 1894.
XXXIST MEETING, DETROIT, MICH., 1895.

NEW YORK CITY:
PUBLISHED BY THE SOCIETY,
FROM THE LIBRARY BUILDING,
NO. 12 WEST 31ST STREET.
1895.

Digitized by Google

LELAND STANFORD JUNIOR
LIBRARY

Press of J. J. Little & Co.
Astor Place, New York

Digitized by Google

OFFICERS

OF THE

AMERICAN SOCIETY OF MECHANICAL ENGINEERS,

1894–1895,

FORMING THE STATUTORY COUNCIL.

PRESIDENT.

E. F. C. DAVIS*.....Richmond, Va.

VICE-PRESIDENTS.

C. E. BILLINGS.....Hartford, Conn.
PERCIVAL ROBERTS, JR.....Pencoyd, Pa.
H. J. SMALL.....Sacramento, Cal.

Terms expire at Annual Meeting of 1895.

F. H. BALL.....New York City.
JESSE M. SMITH.....Detroit, Mich.
M. L. HOLMAN.....St. Louis, Mo.

Terms expire at Annual Meeting of 1896.

MANAGERS.

CHAS. H. MANNING.....Manchester, N. H.
C. W. PUSEY.....Wilmington, Del.
JOHN THOMPSON.....New York City.

Terms expire at Annual Meeting of 1895.

JOHN B. HERRESHOFF.....Bristol, R. I.
L. B. MILLER.....Elizabeth, N. J.
W. S. RUSSEL.....Detroit, Mich.

Terms expire at Annual Meeting of 1896.

JOHN C. KAFER.....New York City.
CHAS. A. BAUER.....Springfield, O.
ARTHUR C. WALWORTH.....Boston, Mass.

Terms expire at Annual Meeting of 1897.

TREASURER.

WM. H. WILEY.....No. 53 East 10th St., New York City.

SECRETARY.

PROF. F. R. HUTTON.....No. 12 West 31st St., New York City.

---

* Mr. E. F. C. Davis died August 6, 1895.

Digitized by Google

HONORARY COUNCILLORS.

Past Presidents of the Society.

R. H. THURSTON	1880—1882	Ithaca, N. Y.
E. D. LEAVITT	1882—1883	Cambridgeport, Mass.
JOHN E. SWEET	1883—1884	Syracuse, N. Y.
J. F. HOLLOWAY	1884—1885	New York City.
COLEMAN SELLERS	1885—1886	Philadelphia, Pa.
HORACE SEE	1887—1888	New York City.
HENRY R. TOWNE	1888—1889	Stamford, Conn.
OBERLIN SMITH	1889—1890	Bridgeton, N. J.
ROBERT W. HUNT	1890—1891	Chicago, Ill.
CHARLES H. LORING	1891—1892	Brooklyn, N. Y.

[NOTE.—The former Presidents of the Society are members of the Council for life or during their retention of active membership in the Society.]

Digitized by Google

PAST OFFICERS.

(EXECUTIVE.)

R. H. THURSTON.....	*President*.....	April 7th, 1880—Nov. 3d, 1882.
E. D. LEAVITT, JR.....	"	Nov. 3d, 1882—Nov. 3d, 1883.
JOHN E. SWEET.....	"	Nov. 3d, 1883—Nov. 7th, 1884.
J. F. HOLLOWAY..	"	Nov. 7th, 1884—Nov. 13th, 1885.
COLEMAN SELLERS.....	"	Nov. 13th, 1885—Dec. 2d, 1886.
GEO. H. BABCOCK *	"	Dec. 2d, 1886—Dec. 1st, 1887.
HORACE SEE.....	"	Dec. 1st, 1887—Oct. 18th, 1888.
HENRY R. TOWNE.....	"	Oct. 18th, 1888—Nov. 22d, 1889.
OBERLIN SMITH.....	"	Nov. 22d, 1889—Nov. 14th, 1890.
ROBT. W. HUNT	"	Nov. 14th, 1890—Nov. 20th, 1891.
CHAS. H. LORING	"	Nov. 19th, 1891—Nov. 29th, 1892.
ECKLEY B. COXE †.....	"	Nov. 29th, 1892—Dec. 4th, 1894.
LYCURGUS B. MOORE....	*Treasurer*.....	April 7th, 1880—Dec. 2d, 1881.
" " "	*Acting-Sec'y*...	April 7th, 1880—Nov. 4th, 1880.
THOS. WHITESIDE RAE, ‡	*Secretary*.....	Nov. 4th, 1880—March 1st, 1883.
CHAS. W. COPELAND §..	*Treasurer*	Dec. 2d, 1881—Nov. 7th, 1884.

MEMBERS OF PREVIOUS COUNCILS.

VICE-PRESIDENTS.

HENRY R. WORTHINGTON, ‖ COLEMAN SELLERS, ECKLEY B. COXE, † Q. A. GILLMORE, WM. H. SHOCK, ALEX. L. HOLLEY, ¶ F. A. PRATT, W. P. TROWBRIDGE, ** E. D. LEAVITT, JR., CHAS. E. EMERY, JOHN FRITZ, HENRY MORTON, WM. METCALF, S. B. WHITING, A. B. COUCH, W. R. ECKHART, J. V. MERRICK, CHARLES W. COPELAND, § OLIN LANDRETH, HENRY R. TOWNE, C. H. LORING, HORACE SEE, ALLAN STIRLING, JOS. MORGAN, JR., C. T. PORTER, HORACE S. SMITH, W. S. G. BAKER, H. G. MORRIS, C. J. H. WOODBURY, THOS. J. BORDEN, WM. KENT, CHAS. B. RICHARDS, JOEL SHARP, GEO. W. WEEKS, DE VOLSON WOOD, S. W. BALDWIN, JOHN F. PANKHURST, ALEXANDER GORDON, GEO. I. ALDEN, E. F. C. DAVIS, IRVING M. SCOTT, C. W. HUNT, THOS. R. PICKERING, and EDWIN REYNOLDS.

MANAGERS

W. P. TROWBRIDGE, ** T. N. ELY, J. C. HOADLEY, †† WASHINGTON JONES, WM. B. COGSWELL, F. A. PRATT, CHAS. B. RICHARDS, S. B. WHITING, J. F. HOLLOWAY, GEO. W. FISHER, ALLAN STIRLING, GEO. H. BABCOCK, S. W. ROBINSON, JNO. E. SWEET, R. W. HUNT, CHAS. T. PORTER, C. J. H. WOODBURY, W. F. DURFEE, OBERLIN SMITH, C. C. WORTHINGTON, WM. LEE CHURCH. WM. HEWITT, C. H. MORGAN, H. A. HILL, WM. KENT, S. T. WELLMAN, F. G. COGGIN, J. T. HAWKINS, T. R. MORGAN, SR., S. W. BALDWIN, FRED'K GRINNELL, MORRIS SELLERS, FRANK H. BALL, GEO. M. BOND, WM. FORSYTH, JAS. E. DENTON. CARLETON W. NASON, H. H. WESTINGHOUSE, ANDREW FLETCHER, WORCESTER R. WARNER, COLEMAN SELLERS, JR., JAS. M. DODGE, ROBT. FORSYTH, and JESSE M. SMITH.

---

* Died, Dec. 16, 1893. † Died, May 13, 1895. ‡ Died, May 27, 1893.
§ Died, Feb. 7, 1895. ‖ Died, Dec. 17, 1880. ¶ Died, Jan. 29, 1883.
** Died, Aug. 12, 1892. †† Died, Oct. 21, 1886.

Digitized by Google

NOTE.

THE considerable bulk of the annual volume of *Transactions* has induced the Publication Committee to direct that the full list of members of the Society should be omitted from the preliminary matter therein. The list which would have been published here is that which was corrected up to July, 1895, and was issued as a second edition of the Sixteenth Catalogue. The following summary records the number of members in each grade :

Honorary Members	17
Members	1,365
Associate Members	86
Junior Members	275
Total Membership	1,743
Life Members *	62

* These Life Members are included in the total membership above, in the class to which they belong.

Digitized by Google

RULES OF THE AMERICAN SOCIETY OF MECHANICAL ENGINEERS.

ART. 1. The objects of the AMERICAN SOCIETY OF MECHANICAL ENGINEERS are to promote the Arts and Sciences connected with Engineering and Mechanical Construction, by means of meetings for social intercourse and the reading and discussion of professional papers, and to circulate, by means of publication among its members, the information thus obtained.

ART. 2. All persons connected with engineering may be eligible for admission into the Society.

ART. 3. The Society shall consist of Honorary Members, Members, Associates, and Juniors.

ART. 4. Honorary Members, not exceeding twenty-five in number, may be elected. They must be persons of acknowledged professional eminence.

ART. 5. To be eligible as a Member, the candidate must be not less than thirty years of age, and must have been so connected with engineering as to be competent as a designer or as a constructor, or to take responsible charge of work in his department, or he must have served as a teacher of engineering for more than five years.

NOTE.—The Rules of the Society, adopted in 1880, were in force until 1884, when they received a general revision by a careful committee, whose report, distributed by letter ballot, was adopted November 5, 1884. In December, 1894, a similar extensive revision was made under direction of the Council, and the present rules are those of 1894. They include the amendments made in 1889, 1891, and 1893, which were the only changes since the revision of 1884.

Digitized by Google

ART. 6. To be eligible as an Associate, the candidate must be not less than twenty-six years of age, and must have the other qualifications of a member; or he shall have been so connected with engineering as to be competent to take charge of work, and to coöperate with engineers.

ART. 7. To be eligible as a Junior, the candidate must have had such engineering experience as will enable him to fill a responsible position, or he must be a graduate of an engineering school.

ART. 8. All Honorary Members, Members, and Associates shall be equally entitled to the privileges of membership. Juniors shall not be entitled to vote, nor to be officers of the Society.

ART. 9. Nominees for Honorary Membership must be proposed by at least five Members who are not officers of the Society. References shall not be required of a nominee for Honorary Membership, but the grounds upon which the application is made must be fully set forth in writing and signed by the proposers.

ART. 10. A candidate for admission to the Society, as a Member or as an Associate, must make an application on a form to be prepared by the Council, which shall contain a written statement giving a complete account of his engineering experience and an agreement that he will, if elected, conform to the laws, rules, and requirements of the Society. He must refer to at least five Members or Associates personally known to him. A candidate for admission to the Society as a Junior must make an application on the same form and refer to not less than three Members or Associates personally known to him.

ART. 11. The referees for each candidate for admission to the Society shall be requested to make a confidential communication on a form to be prepared by the Council, setting forth in detail such information, personally known by the referee, as shall enable the Council to arrive at a proper estimate of the eligibility of the candidate for admission to the Society. Such confidential communications shall be destroyed by the Secretary as soon as the vote has been officially declared.

ART. 12. All applications for membership must be presented to the Council, and this body shall consider each application, assigning to each, with the applicant's consent, the grade in

Digitized by Google

the Society to which, in its opinion, his qualifications entitle him. The names of those candidates recommended for election by the Society shall be immediately printed on a ballot, and the ballot mailed at once by the Secretary to each voting member of the Society. Persons desiring to change their grade of membership from junior to associate or from associate to member shall make an application in the same manner and on the same form as that required for a new applicant.

ART. 13. A member entitled to vote may leave the name of any candidate on the ballot untouched to vote in favor of the admission of the candidate to the Society, or he may erase the name to vote against it. He shall enclose the ballot so approved by him in a sealed blank envelope, and enclose this envelope in a second envelope, on which he shall write his name, and mail the same to the Secretary of the Society. A ballot without such endorsement shall be rejected as defective. The rejection of a candidate by seven voters shall defeat his election.

ART. 14. The aforesaid envelopes containing the ballots shall be opened by the Council, at any meeting thereof, and the names of those elected shall be announced in the next meeting of the Society. The names of applicants not elected shall not be announced, nor recorded in the proceedings.

ART. 15. Endorsers of any applicant not elected may, within three months after such failure to be elected, lay before the Council written evidence that an error was then made. The Council may then, by a three-fourths vote, order another similar ballot by the Society, in which case thirteen negative votes shall be required to defeat the candidate.

ART. 16. Honorary members shall be elected by the unanimous vote of the Council, through a letter ballot, not less than sixty days subsequent to the proposal, a notice of which proposed election shall have been mailed at once by the Secretary to each member of the Council.

ART. 17. Each person elected, excepting honorary members, must subscribe to the Rules of the Society, and pay the initiation fee before he can receive a certificate entitling him to the rights and privileges of the Society, and to wear the emblem appropriate to his grade. If this payment is not made within six months of the election, the same shall be void, unless the time is extended by the Council. The emblems of each grade

Digitized by Google

of membership shall be worn by those only who belong to that grade.

ART. 18. The initiation fee of a member or an associate shall be twenty-five dollars, and the annual dues shall be fifteen dollars, payable in advance. The initiation fee of a junior shall be fifteen dollars, and his annual dues ten dollars, payable in advance. A junior being promoted to any other grade of membership shall pay an additional initiation fee of ten dollars. Any member or associate may become a Life Member in the same grade, by the payment of two hundred dollars at one time, and shall not be liable thereafter to annual dues.

The Council shall have the power, for special reasons, by unanimous vote, through a letter ballot, to admit to life membership, without the payment of the sum above named, such person as for a long term of years has been a member or an associate, when such a procedure would in its judgment be for the best interests of the Society; provided that notice of such action shall have been given at a previous meeting of the Council.

ART. 19. Any member of the Society in arrears may, at the discretion of the Council, be deprived of the publications of the Society, or, when in arrears for one year, he may be stricken from the list of members. Such person may be restored to the privileges of membership by the Council on payment of all arrears.

ART. 20. The affairs of the Society shall be managed by a Council, consisting of a President, six Vice-Presidents, nine Managers, and a Treasurer, who shall also be the Trustees of the Society.

All past (ex) Presidents of the Society, while they retain their membership therein, shall be known as Honorary Councillors, and shall be entitled to receive notices of all meetings of the Council and may take part in any of its deliberations; they shall be entitled to vote upon all questions except such as affect the legal rights or obligations of the Society or its members.

ART. 21. The members of the Council shall be elected from among the members and associates of the Society at the annual meetings, and shall hold office as follows:

The President and the Treasurer for one year; and no person shall be eligible for immediate re-election as President who shall have held that office for two consecutive years; the Vice-Presidents for two years, and the Managers for three years; and no

Digitized by Google

Vice-President or Manager shall be eligible for immediate re-election to the same office at the expiration of the term for which he was elected.

ART. 22. A Secretary, who shall be a member of the Society, shall be appointed for one year by a majority of the members of the Council at its first meeting after the annual election, or as soon thereafter as the votes of a majority of the members of the Council can be secured for a candidate. The Secretary may be removed by a vote of twelve members of the Council, at any time after one month's notice has been given him by a majority of its members to show cause why he should not be removed, and he has been heard to that effect. The Secretary may take part in any of the deliberations of the Council, but shall not have a vote therein. His salary shall be fixed for the time he is appointed by a majority vote of the Council.

ART. 23. At each annual meeting, a President, three Vice-Presidents, three Managers and a Treasurer shall be elected, and the term of office of each shall continue until the end of the meeting at which their successors are elected.

ART. 24. The duties of all officers shall be such as usually pertain to their offices or may be delegated to them by the Council or by the Society. The Council may, in its discretion, require bonds to be given by the Treasurer.

ART. 25. The Council may, by vote of a majority of all its members, declare the place of any officer vacant, on his failure for one year, from inability or otherwise, to attend the Council meetings, or to perform the duties of his office. All such vacancies and those occurring by death or resignation shall be filled by the appointment of the Council, and any person so appointed shall hold office for the remainder of the term for which his predecessor was elected or appointed; *provided* that the said appointment shall not render him ineligible at the next annual meeting.

ART. 26. Five members of the Council shall constitute a quorum. Members of the Council absent from a meeting may vote by letter upon subjects stated in the call for the meeting, said vote to be deposited with the Secretary.

ART. 27. The President on assuming office shall appoint a Finance Committee and a Publication Committee and a Library Committee of five members each. The appointment of two members of each Committee shall expire at the end of each

Digitized by Google

year. The Secretary shall, *ex officio*, be a member of all three committees.

ART. 28. The Finance Committee shall have power to order all ordinary or current expenditures, and shall audit all bills therefor. No bill shall be paid except upon their audit. When special appropriations are ordered by the Society, they shall not take effect until they have been referred to the Council and Finance Committee in conference.

ART. 29. It shall be the duty of the Publication Committee to receive all papers contributed, and to decide upon which papers or parts of the same shall be presented at the professional meetings of the Society. They shall see that all editorial revisions of the proceedings, papers, discussions, and reports are made; and to decide what parts of the same shall be published in the proceedings of the Society. The Council may at its discretion revise any action of the Publication Committee.

ART. 30. It shall be the duty of the Library Committee to take charge of the collection of all material for the Library of the Society, and to supervise all regulations for its use.

ART. 31. At the regular meeting preceding the annual meeting a nominating committee of five members, not officers of the Society, shall be appointed, and this committee shall, at least thirty days before the annual meeting, send to the Secretary the names of nominees for the offices falling vacant under the rules. In addition to such regularly appointed committee, any other five members or associates, not in arrears, may constitute an independent nominating committee, and may present to the Secretary, at least thirty days before the annual meeting, all the names of such candidates as they may select. All the names of such independent nominees shall be placed upon the ballot list, with nothing to distinguish them from the nominees of the regular committee, and the Secretary shall at once mail the said list of names to each member and associate in the form of a letter ballot, it being understood that the assent of the nominees shall have been secured in all cases.

ART. 32. In the election of Vice-Presidents, each member and associate may cast as many votes as there are Vice-Presidents to be elected. He may give all these votes to one candidate, or distribute them among more, as he chooses. Managers shall be voted for in the same way.

ART. 33. Any member or associate entitled to vote may vote

Digitized by Google

by retaining or changing the names on said list, leaving names not exceeding in number the officers to be elected, and returning the list to the Secretary—such ballot inclosed in two envelopes, the inner one to be blank and the outer one to be indorsed by the voter. No member or associate in arrears since the last annual meeting shall be allowed to vote until said arrears shall have been paid.

ART. 34. The said blank envelopes shall be opened by tellers at the annual meeting, and the person who shall have received the greatest number of votes for the several offices shall be declared elected.

MEETINGS.

ART. 35. The annual meeting of the Society shall be held on the first Tuesday in December of each year, in the City of New York, unless otherwise ordered, at which a report of proceedings and an abstract of the accounts shall be furnished by the Council. The Council may change the place of the annual meeting, and shall, in that case, give timely notice to members and associates.

ART. 36. Other regular meetings of the Society shall be held in each year at such time and place as the Council may appoint. At least thirty days' notice of all meetings shall be mailed by the Secretary to members, honorary members, associates and juniors.

ART. 37. Special meetings may be called whenever the Council may see fit; and the Secretary shall call a special meeting at the written request of twenty or more members. The notices for special meetings shall state the business to be transacted, and no other shall be entertained.

ART. 38. Any member, honorary member or associate may introduce a stranger to any meeting; but the latter shall not take part in the proceedings without the consent of the meeting.

ART. 39. Every question which shall come before the Society shall be decided, unless otherwise provided by these rules, by the votes of a majority of the members and associates present, provided there is a quorum.

ART. 40. At any regular meeting of the Society thirteen or more members and associates shall constitute a quorum.

Digitized by Google

ART. 41. Unless otherwise ordered, papers shall be read in the order in which their text is received by the Secretary. Before any paper appears in the *Transactions* of the Society, a copy of the paper shall be sent to the author, and, so far as possible, a copy of the reported discussion shall be sent to every member who took part in the same, with requests that attention shall be called to any errors therein.

ART. 42. The Society shall claim no exclusive copyright in papers read at its meetings, nor in reports of discussions, except in the matter of official publication with the Society's imprint, as its *Transactions*. The Secretary shall have sole possession of papers between the time of their acceptance by the Publication Committee and their reading, together with the drawings illustrating the same; and at the time of such reading, or as soon thereafter as practicable, he shall cause to be printed, with the authors' consent, copies of such papers, "subject to revision," with such illustrations as are needed for the *Transactions*, for distribution to the members and for the use of technical newspapers, American and foreign, which may desire to reprint them in whole or in part. The policy of the Society in this matter shall be to give papers read before it the widest circulation possible, with the view of making the work of the Society known, encouraging mechanical progress, and extending the professional reputation of its members.

ART. 43. The author of each paper read before the Society shall be entitled to twelve copies, if printed, for his own use, and all members shall have the right to order any number of reprints of papers at a cost to cover paper and printing; *provided*, that said copies are not intended for sale.

ART. 44. The Society is not, as a body, responsible for the statements of fact or opinion advanced in papers or discussions, at its meetings; and it is understood that papers and discussions should not include matters relating to politics or purely to trade.

ART. 45. These rules may be amended, at any annual meeting, by a two-thirds vote of the members present; *provided*, that written notice of the proposed amendment shall have been given at a previous meeting.

Digitized by Google

CONTENTS OF VOLUME XVI.

			PAGE
DCVI		Proceedings, New York, XXXth Meeting	3
DCVII	Dean, F. W	Changing the Suction System of a Pumping Engine	40
DCVIII	Webber, Samuel, Webber, S. S.	Trial of a Vertical Triple-Expansion Condensing Pumping Engine at the Trenton Water Works	49
DCIX	Lanza, Gaetano, Miller, E. F.	Some Tests of the Strength of Spruce Columns	56
DCX	Lanza, Gaetano	The Application of Brakes to the Truck Wheels of a Locomotive.	69
DCXI	Platt, Jos. C	Straightening a Leaning Chimney 100 Feet High	75
DCXII	Peabody, C. H., Miller, E. F.	Tests on the Triple Engine at the Massachusetts Institute of Technology	82
DCXIII	Henderson, G. R.	A Graphical Method of Designing Springs	92
DCXIV	Robinson, A. W.	Drawing-Office Appliances	106
DCXV	Porter, Chas. T.	Comparison of the Action of a Fixed Cut-Off and Throttling Regulation with that of the Automatic Variable Cut-Off, on Compound and Triple-Expansion Engines	111
DCXVI	Porter, Chas. T	Description of a Cam for Actuating the Valves of High-Speed Steam Engines	117
DCXVII	Porter, Chas. T.	Description of an Improved Centrifugal Governor and Valve	184
DCXVIII	Porter, Chas. T.	Description of Improved Forms of Steam Separator, Steam Jacket, and Re-heater	137
DCXIX	Dean, F. W	Trial of the Leavitt Pumping Engine, at Louisville, Ky., Capacity 16,000,000 Gallons in twenty-four hours	169
DCXX	Dean, F. W	Trials of a Recent Compound Engine with a Cylinder Ratio of 7 to 1	179
DCXXI	Lanza, Gaetano	Stresses in the Rims and Rim-Joints of Pulleys and Fly-wheels	208
DCXXII	Sinclair, G. M	Notes on Steel Forgings	228
DCXXIII	Randolph, L. S.	Strength of Railway Car Axles	237

Digitized by Google

			PAGE
DCXXIV	BARNES, D. L.	Rail Pressures of Locomotive Driving Wheels	249
DCXXV	GOSS, W. F. M.	An Experimental Study of the Effect of the Counterbalance in Locomotive Drive-Wheels upon the Pressure between Wheel and Rail	305
DCXXVI	WOOD, M. P.	Rustless Coatings for Iron and Steel.—Galvanizing, Electro-Chemical Treatment, Painting, and other Preservative Methods	350
DCXXVII	BARR, JOHN M.	Experiments on a System of Governing by Compression	430
DCXXVIII	JACOBUS, D. S.	Results of Measurements to Test the Accuracy of Small Throttling Calorimeters	448
DCXXIX	KERR, C. V.	On the Theory of the Moment of Inertia	477
DCXXX	FIELD, C. J.	Present and Prospective Development of Electric Tramways	504
DCXXXI	KEEP, WM. J.	Relative Tests of Cast Iron	542
DCXXXII		Topical Discussions and Interchange of Data	590
DCXXXIII		Proceedings	635
DCXXXIV	GABRIEL, W. A	A T-Square and Its Mountings	651
DCXXXV	FRANCIS, W. H.	A Portable Disinfecting Plant	655
DCXXXVI	GOODALE, A. M.	Description of a New Form of Sterilizer	659
DCXXXVII	WOOD, M. P.	Rustless Coatings for Iron and Steel. Third Paper	663
DCXXXVIII	WOOD, DE VOLSON	Analysis of the Tremont Turbine.	707
DCXXXIX	MORISON, GEO. S.	Expansion Bearings for Bridge Superstructures	724
DCXL	ARMSTRONG, E. J.	A New Shaft Governor	729
DCXLI	WOOD, DE VOLSON	The Strength of Iron as Affected by Tensile Stress while Hot	739
DCXLII	ALLISON, ROBERT	The Old and the New	742
DCXLIII	KNAPP, E. C	A Method of Proportioning Cylinders for Compound Engines	762
DCXLIV	BRYAN, WM. H.	The Down-Draught Furnace for Steam Boilers	773
DCXLV	GOSS, W. F. M.	New Forms of Friction Brakes	806
DCXLVI	BRILL, GEO. M.	Pipe-Covering Tests	827
DCXLVII	TAYLOR, FRED. W.	A Piece-Rate System	859
DCXLVIII	CARPENTER, R. C.	The Effect of Length of Specimen on the Percentage of Ductility.	904
DCXLIX	CARPENTER, R. C.	Tests made on the Experimental Engine of Sibley College, Cornell University	913

Digitized by Google

			PAGE
DCL	DEAN, F. W	The Efficiency of Boilers: A Criticism of the Society's Standard Code of Reporting Boiler Trials	962
DCLI	CARPENTER, R. C	Force Required and Work Performed in Driving and Pulling Cut and Wire Nails	1002
DCLII	JACOBUS, D. S	Tests to Show the Distribution of Moisture in Steam when Flowing through a Horizontal Pipe	1017
DCLIII	CARPENTER, R. C	A New Coal Calorimeter	1040
DCLIV		Report of Committee on Standard Tests and Methods of Testing Materials	1066
DCLV	KEEP, WM. J	Transverse Strength of Cast Iron	1082
DCLVI	KEEP, WM. J	Keep's Cooling Curves: A Study of Molecular Changes in Metals due to Varying Temperatures	1117
DCLVII	JACKSON, D. C., RICHTER, A. W	Tests of a Combined Electric Light and Electric Railway Central Station	1142
DCLVIII	WILLIS, EDWARD J	A Horse-Power Planimeter	1161
DCLIX		Topical Discussions and Interchange of Data	1168
DCLX		Memorial Notice of Mr. E. F. C. Davis	1177
DCLXI		Memorial Notice of Mr. Eckley B. Coxe	1182
DCLXII		General Memorial Notices	1187

Digitized by Google

Digitized by Google

LIST OF ILLUSTRATIONS.

FIG.		PAGE
1.	Suction of a pumping engine, relief valve	41
2.	" " " base of valve	42
3.	" " " arrangement	43
4, 5.	" " " indicator cards	45
6, 7.	" " " " "	46
8, 9.	" " " " "	47
10–12.	Tests of vertical triple pumping engine, indicator cards	53
13.	" " " " " combined "	54
14.	Tests of strength of spruce columns, measuring apparatus	57
15.	Profile of R. R. line for brake tests	70
16.	Straightening a leaning chimney 100 feet high	77
17.	" " " " " "	79
18.	Tests on triple engine, Mass. Inst. Tech	83
19.	" " " " " "	85
20, 21.	Designing springs, scheme of	93
22.	" " diagram for	95
23.	" " " "	96
24.	" " " "	97
25.	" " " "	100
26.	" " " "	101
27.	Drawing-office table	106
28.	" " frame	107
29.	" " blue-printing frame	108
30.	" " illuminated table	109
31.	Comparison of fixed and variable cut-off, diagram	115
32.	" " " " "	116
33.	Cam for valves, diagram showing usual distribution	119
34.	" " side view and details	121
35.	" " front " "	122
36.	" " plan " "	123
37.	" " design, scheme for	124
38.	" " with earlier cut-off	125
39.	Improved governor, section and plan	135
40.	" " " of valve	136
41.	Porter compound engine, front and side view	faces 138
42.	" " " high-pressure cylinder	139
43.	" " " low " "	140
44.	" " " " " "	141
45.	" " " section through valves	142
46.	" " " " " high-pressure cylinder	143
47.	" " " reheater	144
48.	" " " locking-gear for valve	145
49.	Combined triple engine, diagram	157
50–52.	Leavitt Louisville pumping engine, diagrams	171
53–55.	" " " " "	172

Digitized by Google

FIG.		PAGE
56.	Leavitt Louisville pumping engine, combined diagram	176
57.	Compound engine, with cylinder ratio of 7 to 1, diagram	181
58–60.	" " " " " "	182
61.	Stresses in fly-wheels, diagram for	210
62.	" " " "	217
63.	" " " "	220
64, 65.	" " " "	225
66.	Strength of railway car-axles, diagram of	239
67.	Form of car-axle journal	243
68.	" " " fracture	244
69.	" " " "	245
70.	Rail pressures of locomotive driving-wheels	252
71.	" " " "	254
72, 73.	" " " " piston forms	256
74, 75.	" " " " " "	257
76.	" " " " affecting track	258
77.	" " " " applied out of line	260
78, 79.	" " " " forces of	264
80, 81.	" " " " moments of	265
82.	" " " " inertia	266
83.	" " " " moments	267
84.	" " " "	268
85.	" " " "	269
86, 87.	" " " "	273
88.	" " " " diagram	278
89.	" " " " in axle box	279
90, 91.	" " " " " "	281
92.	" " " "	282
93, 94.	" " " "	284
95.	" " " " analysis	290
96, 97.	" " " " "	291
98–101.	" " " " "	292
102, 103.	" " " " "	293
104.	" " " " "	295
105–110.	" " " " "	299
111.	" " " " "	302
112, 113.	Counterbalance in locomotive drive-wheels	307
114.	" " " "	310
115.	" " " "	312
116.	" " " "	313
117.	" " " "	315
118.	" " " " discussion, by Parsons	328
119–121.	Strong's balanced compound engine	336
122, 123.	Rustless coatings for iron and steel	359
124.	" " " " "	360
125.	" " " " "	361
126.	" " " " "	364
127.	" " " " "	366
128.	" " " " "	368
129.	" " " " "	376

Digitized by Google

FIG. PAGE
130. Governing by compression, diagram 433
131. " " " 434
132. " " " 436
133–135. " " " 438
136 " " " 439
137. " " " 440
138. " " " 441
139. " " change of heat of cylinder walls 446
140, 141. " " " " " " 447
142. Cam for locomotive of Winans' design 164
143. Calorimeters, arrangement to test 464
144. " " in piping 467
145. " " " 468
146. " " in detail 470
147. " " " 471
148. " " " 472
149. " " " 473
150. Moment of inertia, diagram for 480
151. " " " " 481
152. " " " " 483
153. " " " " 485
154. " " " " 486
155. " " " " 491
156, 157. Electric tramway conduit 518
158. " " " 530
159. Relative Tests of Cast Iron 558
160. " " " 559
161. " " " 561
162. " " " 567
163. Crystalline structure of cast-iron test-bar 577
164, 165. Modulus of cross-section of cast-iron test-bar 578
166. Calorimeters, tests of 457
167. " " 459
168, 169. Piping of boilers to engines 594
170, 171. " " " 595
172. " " " 596
173, 174. " " " 598
175. " " " 599
176, 177. " " " 600
178. Filing appliances for clippings, etc 610
179, 180. " " " 611
181, 182. " " " 612
183. " " " 614
184–191. T-square and its mountings 652
192–196. " " " 653
197. Portable disinfecting plant 656
198. " " " 657
199. Sterilizer, details of 660
200. " " 661
201. Tremont turbine 708

Digitized by Google

FIG.		PAGE
202–204.	Tremont turbine, details	716
205.	" " "	717
206.	Expansion bearing for bridges	725
207.	" " " detail	727
208.	New shaft governor, diagram	729
209.	" " " "	730
210.	" " " "	731
211.	" " " details	732
212.	" " " differential	734
213, 214.	" " " diagram	736
215.	" " " "	737
216.	Portable boring machine	755
217, 218.	Indicator diagrams, compound engine	768
219.	Down-draught furnace	777
220.	" " "	779
221.	" " " chart	781
222.	" " " "	782
223.	" " "	785
224.	" " "	786
225.	Dynamometer, pendulum absorption	807
226.	" rope "	808
227.	" pipe "	810
228.	" belt driven	812
229.	" Wells	813
230.	"	814
231.	" detail	815
232.	" elevation	816
233.	" detail	818
234.	" rope	820
235.	" Leavitt	821
236.	Pipe-covering test apparatus	828
237.	" " " diagrams	836
238.	" " " "	837
239.	Tests of steel, form of specimen	905
240.	" " results	905
241.	" " "	906
242.	" " form of specimen	906
243.	" " results	907
244, 245.	" "	910
246.	Sibley College engine, perspective	914
247.	" " " brake	915
248, 249.	" " indicator rig	918
250.	" " indicator	920
251.	" " results of test	921
252–270.	" " " "	922–951
271–278.	" " cards	953–955
274, 275.	" " diagrams	956
276.	Stevens Institute experimental boiler	985
277–281.	Force diagrams for pulling nails	1006–1012
282.	Calorimeter determinations, piping for	1020

Digitized by Google

FIG. PAGE
283. Calorimeter determinations, piping for....1030
284, 285. Coal calorimeter, details....1041
286. " " " 1042
287. " " apparatus....1048
288. " " " 1049
289. " " " 1050
290. " " details....1051
291. " " Mahler's....1052
292, 293. " " forms of....1053
294. " " form of....1060
295. " " detail for....1063
296–300. Keep's diagrams of transverse strength....1086–1090
301, 302. Relative transverse strength to stretch of iron....1112, 1113
303. View of crystals of cast iron....1118
304. Machine for observing shrinkage of iron....1120
305. Keep's cooling curves....faces 1122
306. " " " 1122
307. " " " ....faces 1124
308, 309. " " ...." 1126
310. " " " 1127
311. " " " ....faces 1130
312. " " " 1139
313. " " " 1140
314. Combined electric light and power station....1144
315. " " " " " test....1150
316. " " " " " " 1151
317–319. " " " " " " 1152–1154
320. " " " " " 1155
321–326. Horse-power planimeter....1161–1165
327. Portrait of E. F. C. Davis....1178
328. " Eckley B. Coxe....1183

Digitized by Google

Digitized by Google

PAPERS

OF THE

NEW YORK MEETING

(XXXth)

DECEMBER 3d TO 7th, 1894.

BEING ALSO THE FIFTEENTH ANNUAL MEETING OF THE SOCIETY.

Digitized by Google

Digitized by Google

DCVI.

PROCEEDINGS

OF THE

NEW YORK MEETING

(XXXth)

OF THE

AMERICAN SOCIETY OF MECHANICAL ENGINEERS,

December 8d to December 7th, 1894.

THE opening session of the Fifteenth Annual Meeting was made more an opportunity for the assembling members to meet together to renew old acquaintance and to begin new friendships. The rooms of the Society were opened from an early hour on the evening of Monday, December 3d, 1894, but at nine o'clock the president called the Society together in the comfortable auditorium of the Library Association, and announced that there would be discussion on two topics of professional interest. Messrs. Scheffler, Aldrich, Suplee, Warner, Oberlin Smith, Emery, Woolson, Cartwright, and Fry took part in the discussion on the "General Principles Underlying a Judicious Connection of Steam Boilers to the Engines which they were to Drive;" and Messrs. Miller, Chase, Cruikshank, Magruder, Jaques, Oberlin Smith, Halsey, Clark, and Wright discussed the most convenient method of filing clippings and other professional memoranda for convenient reference.

Announcements were made as to the entertainments and other provisions for the comfort of visitors during the convention, and Messrs. J. H. Webster and George W. Weeks were appointed by the president to act as tellers, under Article 35 of the Rules, to

Digitized by Google

count the ballots cast by the membership in the election for officers for the ensuing Society year.

A recess was then taken until the following morning, the members remaining for social opportunity until a late hour.

Second Day.—Tuesday, December 4th.

The regular sessions of the annual meeting began with the session of this morning, at ten o'clock, in the auditorium. The registration of members, even at this early session, showed that the meeting was to be an unusually large one, and the record before the end of the meeting showed that the size and numerical success of the meeting was to be unprecedented. The plan was adopted of numbering the lines on the official register, and providing that the usual button badge worn at the Society's convention should bear a number corresponding to the number on the register. It will be seen that by this expedient every one could immediately ascertain the name of every one else without the embarrassment of a direct question to this end, and the practical result showed that the meeting was one of the most successful on the social side that had ever been held. The register showed the following persons in attendance from the list of members. The total registered, including guests, was four hundred and thirty.

Aborn, Geo. P.
Ackerman, W. S.
Alden, Geo. I.
Aller, A.
Almirall, J. A.
Almond, T. R.
Almy, D.
Anthony, G. C.
Ashley, F. N.
Baker, C. W.
Baldwin, F. L.
Baldwin, F. R.
Baldwin, S. W.
Bang, H. A.
Barnes, A. T.
Barnum, Geo. S.
Barr, Jno. H.
Barr, H. P.
Barratt, E. G.
Barrus, Geo. H.
Batchelor, Chas.
Bauer, C. A.
Beach, Giles.
Beardsley, Arthur.
Billings, C. E.
Binsse, H.
Blackburn, A. H.
Boenig, R. W.
Bole, W. A.
Bond, G. M.
Bourne, S. N.
Boyer, F. H.
Bradley, C. L.
Bradley, W. H.
Brady, Jas.
Brashear, J. A.
Bristol, W. H.
Bulkley, H. W.
Bullock, E. R.
Burnham, Wm.
Butcher, J. J.
Buzby, C. E.
Cadwell, W. D.
Caldwell, A. J.
Camp, Geo. E.
Campbell, Gordon.
Canfield, H.
Carpenter, H. A.
Carter, H. W.
Cartwright, R.
Cary, A. A.
Chase, H. S.
Chase, W. L.
Cheny, W. L.
Childs, A. E.
Christie, W. W.
Clark, S. J.
Clark, T. C.
Clark, Walton.
Cobb, Geo. H.

Digitized by Google

Cogswell, W. B.
Cole, F. J.
Colwell, A. W.
Conover, E. K.
Connell, J. A.
Conrad, H. V.
Coxe, Eckley B., *Pres.*
Cramp, E. S.
Creelman, Frank.
Cremer, J. M.
Cruikshank, B.
Cruikshank, L. B.
Cullingworth, Geo. R.
Curtis, R. E.
Dale, O. G.
Daniels, F. H.
Darling, E. A.
Dashiell, W. W.
Davis, E. F. C.
Davis, L. K.
Dean, F. W.
Deane, Chas. P.
Derbyshire, W. H.
DeSchweinitz, P. B.
Dinkel, Geo.
Doane, W. H.
Dobbins, S. D.
Dripps, W. A.
Durfee, W. F.
Eaton, R. W.
Edwards, L. T.
Egleston, Thos.
Emery, Chas. E.
Engel, L. G.
Estrada, E. D.
Faber DuFaur, A.
Field, B. K.
Field, C. R.
Fisher, Clark.
Fladd, F. C.
Flagg, S. G.
Flather, F. A.
Fleming, W. R.
Forbes, W. B.
Forney, F. N.
Foster, E. H.
Foster, J. D.
Fowler, Geo. L.
Francis, W. H.
Freeman, J. R.
Frevert, H. F.
Frith, A. J.
Fritz, John.
Fry, A. B.
Gale, H. B.
Gantt, H. L.
Gaskin, E. F.
Gilkerson, J. A.
Gill, J. L.
Gillis, H. A.
Glenn, H. F.
Gobeille, J. L.
Goetz, V. J.
Gordon, Alex.
Goubert, A. W.
Gould, W. V.
Graves, E.
Green, S. M.
Greensmith, J. E.
Greenwood, P. F.
Gregory, Wm.
Grimm, P. H.
Grover, L. C.
Guilford, W. M.
Gwilliam, Geo. T.
Hale, R. S.
Halsey, F. A.
Hamilton, J. V.
Hand, S. A.
Hart, C. E.
Hartness, Jas.
Haskins, H. S.
Hawkins, J. T.
Hawkins, W. C.
Hayward, F. H.
Hemenway, F. F.
Henderson, Alex.
Henderson, Geo. R.
Henderson, J. C.
Henning, G. C.
Hershey, M. E.
Hibbard, H. D.
Hibbard, H. W.
Hill, Geo.
Hillard, J. C.
Holloway, J. F.
Hopton, W. E.
Hoppes, J. J.
Horstman, H. J.
Hough, D. L.
Hunt, C. W.
Hunt, W. F.
Hunting, A. A.
Huson, W. S.
Huston, C. L.
Hutchinson, C. T.
Hutton, F. R., *Sec'y.*
Hyde, C. E.
Idell, F. E.
Ingersoll, W.
Jacobi, A. W.
Jacobus, D. S.
Jaques, W. H.
Jenkins, M. C.
Jenks, W. H.
Johnson, A. E.
Jones, F. C.
Jones, Washington.
Kafer, J. C.
Kaven, M. B.
Keep, W. J.
Kent, Wm.
Kerr, C. V.
Kerr, W. C.
King, C. C.
King, W. R.
Kirchhoff, Charles.
Klein, J. S.
Knickerbacker, Jno.
Knight, A. F.
Kruesi, John.
Laforge, F. H.
Lager, C. A.
Lane, H. M.
Lane, J. S.
Langlotz, Chas.
Langlotz, Robert.
Lanza, G.
Larkin, F. A.
Lieb, J. W.
Lockwood, E. H.
Lockwood, J. F.
Logan, W. J.
Longnecker, C. K.
Loring, C. H.
Low, F. R.
Ludlow, W. O.
Lyall, W. L.
McDuffie, C. D.
McElroy, S.
McGeorge, Jno.
Magoun, H. A.
McKee, J. J.

Digitized by Google

McMannis, Wm.
Manning, C. H.
Marx, Henry.
Mason, W. B.
Matlack, D. J.
Matlack, J. R.
Meatz, J. T.
Melvin, D. N.
Messenger, F. M.
Meyer, H. C.
Miller, F. J.
Miller, H. B.
Miller, L. B.
Marble, H. M.
Mayo, J. B.
Monaghan, W. F.
Montgomery, H. M.
Moore, D. G.
Moore, M. F.
Morgan, C. H.
Morgan, P. B.
Morison, G. S.
Morris, H. G.
Morse, C. M.
Moulthrop, Leslie.
Muller, T. H.
Mumford, E. H.
Nason, C. W.
Naylor, E. W.
Newcomb, C. L.
Nicoll, C. H.
Norris, H. McCoy.
Norris, J. H.
Norris, R. V. A.
Owen, Jas.
Painter, Wm.
Palmer, Geo. E.
Parsons, H. DeB.
Partridge, W. E.
Payne, S. F.
Pearson, W. A.
Peek, G. M.
Penney, E.
Pentz, A. D.
Phillips, Franklin.
Pickering, T. R.
Piers, Frank.
Pike, W. A.
Pitkin, S. H.
Platt, Geo. H.
Platt, Jno.
Platt, J. C.
Pollock, Jas.
Pomeroy, L. R.
Porter, C. T.
Porter, Wm.
Quimby, W. E.
Rankin, T. L.
Redwood, I. I.
Rettew, C. E.
Richards, C. R.
Richards, F. H.
Richards, Frank.
Richmond, Geo.
Ridgway, J. T.
Roberts, P.
Roberts, Wm.
Robinson, J. M.
Rockwood, G. I.
Roelker, H. B.
Ross, E. G.
Rowland, A. E.
Rowland, C. B.
Rowland, G.
Rowland, T. F.
Rusby, J. M.
Sague, J. E.
Sahlin, A.
Sargent, J. W.
Scheffler, F. A.
Scholl, J. S.
Schutte, L.
Schwanhausser, Wm.
Seavey, J. F.
Sewall, M. W.
Seymour, J. A.
Shirrell, D.
Simonds, Daniel.
Sinclair, A.
Sinclair, Geo. M.
Smith, A. P.
Smith, Chas. F.
Smith, H. W.
Smith, Oberlin.
Snell, H. I.
Souther, H.
Spies, A.
Spillsbury, E. G.
Stangland, B. F.
Stanley, A. W.
Stanton, John.
Stearns, A.
Stevens, E. A.
Stillman, F. B.
Stockly, G. W
Stuart, R. T.
Stiles, N. C.
Strong, G. S.
Suplee, H. H.
Sweet, J. E.
Taber, Geo. H.
Tabor, H.
Taylor, J. T.
Taylor, W. M.
Thomas, E. G.
Thomas, E. W.
Thomson, John.
Tilden, J. J.
Tolman, J. P.
Torrance, K.
Torrey, H. G.
Towl, F. M.
Towne, H. R.
Trautwine, A. P.
Tucker, W. B.
Upson, L. A.
Vanderhoef, G. N.
Varney, W. W.
Waldron, F. A.
Walworth, A. C.
Ward, W. E.
Ware, J. A.
Warner, W. R.
Warren, B. H.
Webb, J. B.
Webber, S. S.
Webber, W. O.
Webster, J. H.
Webster, W. R.
Weeks, G. W.
Wellman, S. T.
West, T. D.
Wheeler, F. B.
Wheeler, F. M.
Wheeler, Seth.
Wheeler, S. S.
Wheelock, J.
White, H. C.
White, M.
Whitehead, G. B.
Whitney, B. D.
Whitney, W. M.
Whittier, Charles.

Digitized by Google

Wiggin, W. H.	Wood, De V.	Williams, O. L.
Wilcox, J. F.	Wood, M. P.	Wyman, H. W.
Wiley, W. H., *Treas.*	Woodbury, C. J. H.	Yereance, W. B.
Wiley, W. O.	Woolson, O. C.	York, H. W.
Winship, J. G.	Wright, J. Q.	Zehnder, C. H.
Wolff, A. R.	Wright, L. S.	

The first regular order of business was the Report from the Council, read as follows:

ANNUAL REPORT OF THE COUNCIL.

The Council of the American Society of Mechanical Engineers begs leave to report to the membership of the Society, under Article 35 of the Rules, the following business transacted during the Society year ending December 1, 1894.

Six meetings have been held for business, at which the grading of applications for membership and other matters came up for consideration.

Applications have been received from a number of technical institutions, requesting that their libraries might be put upon the list of those who are to receive the volumes of *Transactions* gratuitously, as they are issued each year. These requests have been granted in the cases of institutions which by their charter give to their students a degree in engineering, and, in some cases, to make their series complete, back volumes have been transmitted to such libraries at the usual members' rate of half the price at which they can be purchased by outsiders.

The Council has directed the Treasurer to withdraw from the Bleecker Street Savings Bank and from the Merchants' Clerks' Savings Bank the sum of $2,503.29, which had been held by him in trust on account of contributions for the development of the Society's Library. This sum has been reinvested in bonds of the Mechanical Engineers' Library Association, bearing interest at 5 per cent., the income from such investment to be devoted to the development of the Library, in pursuance of the terms of the original subscription.

Letters of thanks have been received by the Council from various organizations of foreign engineers, expressing in warm terms their appreciation of courtesies extended to members of these societies on the occasion of their visits to this country during the Columbian year and the period of the Chicago Exposition.

Digitized by Google

The Society of Naval Architects and Marine Engineers, the Institute of Electrical Engineers, the American Society of Heating and Ventilating Engineers, and the New York Railroad Club have made arrangements for the holding of their professional sessions in the hall and auditorium of the American Society of Mechanical Engineers. The policy of encouraging the grouping around itself of a number of societies with which it can be in close affiliation is a policy which the Council believes to be calculated to strengthen the position and widen the influence of the Society in the industrial activity of the country.

The Council have received back from the Executive Committee of Engineering Societies who conducted the Engineering Headquarters in Chicago, which was maintained during the period of the Exposition, the sum of $200, being the proportion coming to this Society of the surplus remaining in the hands of that body at the close of the Exposition. The subscribers were notified that if they desired their *pro rata* of this surplus, it would be refunded to them, but an opportunity was given them to contribute this small sum to the very considerable expenditure made by the Society in the redemption of obligations imposed by the presence in this country of so many foreign visitors, and also to meet the heavy extra expenditure for printing, etc., involved in the conduct of the Mechanical Section of the Engineering Congress. It will appear from the report of the Finance Committee that the Society has not been able even yet thoroughly to recover from the strain on its resources entailed by these conditions.

Messrs. W. J. Keep and E. D. Estrada have been added to the Society's Committee on Uniform Standards of Test Specimens and Methods of Testing Materials, and Mr. R. W. Hunt has been appointed in place of Henry R. Towne, resigned.

The Council has expressed itself as of the opinion that it would be of advantage that the committee of this Society on Standard Gauges for Thickness of Metals should coöperate with a similar committee of the American Railway Master Mechanics.

The Canadian Society of Civil Engineers has appointed as a Committee of Conference on this subject Messrs. Herbert Wallis, John Barnett, and G. H. Duggan.

The Council has received from the Society of Civil Engineers of France a most cordially expressed resolution of thanks for courtesies received at the hands of members of this Society representing the party of engineers who went to Europe in 1889, and

Digitized by Google

who endeavored to discharge something of the obligation then incurred, when the French engineers visited America in September and October of 1893. Accompanying this resolution were lithographed souvenirs presenting the portraits of those members of the French Society who were entertained in the Society's house and elsewhere, together with a few medals which had been struck in Paris in commemoration of the visit.

The Council have accepted an invitation to hold the meeting of the spring of 1895 in the city of Detroit, Mich.

Since the last report in December, 1893, the following losses by death are to be chronicled:

Franz Grashof,	George H. Babcock,
E. J. Flach,	John H. Harris,
Seth B. Weaver,	George Selden,
E. B. Wall,	O. A. Lanphear,
W. H. Dodge,	Oren G. Heilmann.

The present membership, including those elected at this meeting and favorably acted on by the voting membership, is 1,690, and is distributed among the grades as follows:

Honorary members	16
Members	1,346
Associates	71
Juniors	257
Total	1,690
Life members	59

The Council would also present the report of its tellers, who have been appointed to count the ballots cast for the election of members since the last meeting of the Society in June, 1894.

REPORT OF THE TELLERS OF ELECTION.

The undersigned were appointed a committee of the Council, to act as Tellers (under Rule 13), to scrutinize and count the ballots cast for and against the candidates proposed for membership in the American Society of Mechanical Engineers, and seeking election before the Thirtieth Meeting, New York, 1894.

They have met upon the designated day, in the office of the Society, and have proceeded to discharge their duty. They would certify, for formal insertion in the records of the Society, to the election of the persons whose names appear on the appended list, to their respective grades.

Digitized by Google

There were 486 votes cast on the blue ballot, of which 15 were thrown out because of informalities (the members voting having neglected to indorse the sealed envelope).

WILLIAM H. WILEY,
C. W. HUNT, } *Tellers of Election.*

AS MEMBERS.

Appleton, Charles B.,	Jones, Charles E.,	Quick, Howard Prescott,
Bunn, Frank Wilson,	Levin, Arvid Michael,	Rettew, Charles E.,
Buzby, Charles Ernest,	Lister, Robt. Ramsbottom,	Rodgers, Mayron Knox,
Collins, Reuben Gilbert,	Loomis, Frederick James,	Schoff, George C.,
Creelman, Frank,	McArthur, Robert,	Taber, George H., Jr.,
Decrow, David Augustus,	Mesta, George,	Thompson, Hugh L.,
Eaton, Russell William,	Mullin, Joseph P.,	Tolman, James P.,
Herreshoff, J. B. F.,	Owen, James,	Wheeler, Seth.
Hutchinson, Cary Talcott,	Pierce, Richard H.,	

AS ASSOCIATES.

Edwards, Odgen Jay,	Richards, Robert Haynes,	Smith, Pemberton.

PROMOTIONS TO FULL MEMBERSHIP.

Hibbard, H. Wade, Mayo, John B.

AS JUNIOR MEMBERS.

Allen, John Robins,	Girvin, Charles Jefferys,	Middleton, Percy Howe,
Armstrong, William M.,	Hall, Thomas,	Mitchell, Benjamin M.,
Ashley, Frank M.,	Hunt, William Floyd,	Planting, Peter,
Brown, Walter S.,	Hurd, Hobart J.,	Slater, Fred'k Raymond,
Bush, Harold Montfort,	King, Walter Grant,	Smith, Harry E.,
Childs, Arthur Edward,	Langlotz, Robert,	Wood, Albert Carroll.
Corey, Fred. Brainard,	Malvern, Lewis Keith,	
Dobbins, Stephen Decatur,	Meyer, Henry Coddington,	

At the close of the report of the Council, the second order of business was the report of the Finance Committee, which was as follows:

ANNUAL REPORT OF THE FINANCE COMMITTEE OF THE AMERICAN SOCIETY OF MECHANICAL ENGINEERS, 1893-1894.

The Finance Committee of the American Society of Mechanical Engineers would respectfully report to the Council the following statement of receipts and disbursements on behalf of the Society, under their direction, during the year from November 1, 1893, to November 1, 1894.

Digitized by Google

Annual Report.

Receipts.

Accounts.	Cash.	Bonds.	Total.
Initiation Fees	$2,295 00	... .	$2,295 00
Current Dues	20,050 43	.....	20,050 43
Past Dues	309 35	.....	309 35
Advance Dues	218 16	.....	218 16
Sales of Publications	1,207 09	.....	1,207 09
Binding	18 00	.....	18 00
Rent of Parlor and Hall	580 00	.....	580 00
Badges	435 00	.....	435 00
Engraving	438 56	.... . .	438 56
Life Memberships	600 00	$400 00	1,000 00
Contingencies	10	.....	10
Postage and Express	2 45	.....	2 45
Interest on Investment	970 50	.....	970 50
Gift	... .	600 00	600 00
House Supplies and Furniture	15 25	.....	15 25
Chicago Headquarters (rebate)	200 00	.....	200 00
Office Expenses	11 35	.....	11 35
Repairs	4 00	.....	4 00
Totals	$27,355 24	$1,000 00	$28,355 24
Library Permanent Fund	2,503 29	.....	2,503 29
Totals	$29,858 53	$1,000 00	$30,858 53
Balance in Treasurer's hands first of year	159 68	.....	159 68
Grand Totals	$30,018 21	$1,000 00	$31,018 21

Disbursements.

General Printing and Stationery	$988 58	.....	$988 58
Reprints and Publications	9,789 98	.....	9,789 98
Postage and Express	1,511 66	.....	1,511 66
Salaries	6,894 14	.....	6,894 14
Office Expenses	285 69	.....	285 69
Engraving	1,454 49	.....	1,454 49
Contingencies	108 60	.....	108 60
Binding	1,539 55	.....	1,539 55
Meetings	350 64	.....	350 64
House Supplies and Furniture	642 43	.....	642 43
Badges and Certificates	729 15	.....	729 15
Travelling	100 00	.....	100 00
Insurance and Safe Deposit	17 00	.....	17 00
Rent, Interest, and Taxes	3,004 16	.....	3,004 16
Investment (bonds received as above)	.....	$600 00	600 00
" " " " "	.....	400 00	400 00

Digitized by Google

Disbursements.—Continued.

Accounts.	Cash.	Bonds.	Tot
Library (book purchase)	$35 75	.....	$3
Chicago Headquarters (subscrip. repaid)	9 10	.....	1
	$27,455 92	$1,000 00	$28,45
Bonds Bought (Library Permanent Fund)	$2,502 08	.....	2,50
	$29,958 00	$1,000 00	$30,95
Balance in Treasurer's hands, Nov., 1894	60 21	.....	6
	$30,018 21	$1,000 00	$31,01

In explanation of and comment on the above report, the co mittee begs to call attention to the following

SUMMARY OF RECEIPTS AND DISBURSEMENTS.

Receipts.

Total Cash receipts 1893-94	$29,858 53	
Less Cash received from Permanent Library Fund	2,503 29	
Total Cash receipts (regular sources)	$27,355 24	
Cash Balance in Treasurer's hands, November, 1893	159 68	
Total Receipts		$27,514 92

Disbursements.

Total Cash disbursements, 1893-94	$29,958 00	
Less amount of Cash from Permanent Library Fund expended for bonds	2,502 08	
Actual Disbursements for Expenses	$27,455 92	
Total Balance in Treasurer's hands November, 1894, as shown in Statement above	$60 21	
Portion of this balance which is unexpended balance of Permanent Library Fund ($2,503.29 less $2,502.08)	1 21	
Balance of regular receipts, 1893-94	$59 00	
Total		$27,514 92

From the above it will be seen that the cash receipts from reg lar sources for the year, with the balance on hand at the first the year, exceed the disbursements made for expenses by $59.

In explanation of the item of $2,503.29, mentioned in the sta ment of receipts above, it should be said that this is the amou which has been reported in previous years as standing to t

Digitized by Google

credit of the Society in Savings Banks. This sum has grown from the subscriptions paid in by members of the Society on a special subscription to a fund for the creation and maintenance of the Society's library, from the years 1884 to 1891. The detail of the subscription was very fully recorded in Volume XII., "Proceedings of the Annual Meeting at Richmond, Va." Since the annual dues were increased, there has been no charge made on account of these old subscriptions, which were considered as cancelled by the increase in the annual payment, and the aggregate has been held by the Treasurer accumulating interest. By instruction of the Council in December, 1893, this sum was drawn from the savings bank January 1, 1894, and was used for the purchase, at par, of five per cent. interest-bearing bonds of the Mechanical Engineers' Library Association. The interest from this investment is to be devoted, in accordance with the terms of the original subscription, to the purchase of books, and for other expenses connected with the development of the library of the Society. These bonds are held by the Treasurer of the Society in trust, and so appear on the books and records of the Society.

Of the actual cash disbursements for 1893-94, the sum of $4,183.26 was for bills belonging to the year 1892–93, which have been received and paid during the year which has just closed. Deducting this amount—which was due to the extra expense entailed in 1892–93 on account of its being the Columbian year, when expenses were greatly increased—from the total cash disbursements for expenses, *i.e.*, $27,455.92 less $4,183.26, we have $23,272.66, which sum is the amount of the disbursements for the year 1893–94, for expenses of that year.

There remain unpaid outstanding bills, at the end of the year 1893–94, for expenses of that year, amounting to $3,526.25, and adding this amount to the amount expended for this purpose, as shown above—*i.e.*, $23,272.66—we have $26,798.91, which sum is the total actual expense for the year 1893–94.

Therefore:

The actual cash receipts from regular sources for 1893–4, as shown above	$27,514 92
Less the actual amount of expenses for that year, as shown above	26,798 91
Shows an excess of receipts over expenses for that year	$716 01

Of the original issue of bonds of the Mechanical Engineers' Library Association, amounting to $32,000, the present holding

Digitized by Google

of the Society is $19,000, which amount of bonds have been acquired from the original holders either through purchase at par, surrender in exchange for life memberships, or gift. Of this amount, $3,500, as shown in statement of receipts and disbursements, have been acquired in the year 1893–4, as follows:

Purchased with Permanent Library Fund, as per instruction of the Council, as mentioned above	$2,500 00
Surrendered by original holders for life memberships in 1893–4	400 00
Gift—Bonds received from Mr. Stephen Wilcox ($300) and Mr. George H. Babcock ($300), which were held in trust by the Society during the life of these gentlemen, the interest on which, as per terms of the gift, was used to pay their annual subscriptions to the Sinking Fund of the Mechanical Engineers' Library Association, but which, at their death, reverted to the Society	600 00
Total Bonds	$3,500 00

This makes an investment of $19,000 belonging to the Society, and bearing interest at five per cent. per annum, and leaves $13,000 worth of the original issue of bonds still in the hands of members of the Society, and secured by mortgage held by the Title Guarantee and Trust Company, as trustees for the bondholders.

At the end of the year the total amount due the Society, and uncollected, is as follows:

Dues, 1893–4, from 151 persons	$2,169 00
Back dues previous to 1893–4, from 56 persons	929 48
Badges, volumes, etc., etc., from 8 persons	127 28
Initiation fees, from 6 persons	180 00
Total uncollected	$3,355 76

It will be noted that this sum which the Finance Committee has as yet been unable to collect, but which is due the Society and which the said committee has every expectation of being able to collect, is about enough to cover all outstanding indebtedness, which amounts to $3,526 25, thus showing that if all that is due the Society at the end of the year which has just closed had been collected, nearly all bills for the year could have been paid, even though we also paid bills for 1892–3 amounting to $4,123.86, belonging to last year.

In view of the depression in all branches of industry during the past year, the committee have been more lenient than usual with delinquents, and instead of drawing sight drafts on all those who

Digitized by Google

were in arrears for dues at the expiration of eleven months, only a few men were drawn on; but to all others personal letters were written, requesting them if possible to remit before the end of the year, or to advise us when we could look for such a remittance, and in every case where a request was made for an extension it was immediately recorded. But no one remains in arrears from neglect who still desires to retain his connection with the Society, and the open accounts are those who, through ill health, misfortune, or other good reason, have requested the extension which the Rules allow.

When it is considered that in such a hard year as the one which has just closed there are only one hundred and fifty-one men in arrears out of a total membership of nearly seventeen hundred, the committee considers it a matter of congratulation as showing the healthy interest taken in the Society by its members.

Respectfully submitted,

By the Finance Committee.

REPORT OF THE LIBRARY AND HOUSE COMMITTEE.

The House Committee of the Society, entrusted with the duties of superintending and providing for the interests of the Society's library, which is maintained by the Mechanical Engineers' Library Association as part of the consideration which passes between the two organizations in their relations as landlord and tenant, beg leave to report:

That the use of the library by students and other readers, as well as by the members of the Society, has steadily increased. A register of those who make use of it shows that its privileges have been enjoyed by between three and four thousand persons during the year, particularly in the evening and upon holidays. The Committee makes a special point of keeping the library open at these times, when the absence of demands of other business makes it possible for those closely engaged to avail themselves of the privileges extended.

During the winter of 1894 a number of members arranged to assemble on stated evenings for professional profit. The topics of papers read at the 1894 evenings were "The Steam Engines of the Columbian Exposition," "Water-tube Boilers in the U. S. Navy," "The Sellers-Emery Testing Machine," and "Machines for Testing Materials." Some of these papers were illustrated by

Digitized by Google

lantern slides, and attracted from sixty to a hundred members, resident and non-resident. These reunions were in no sense meetings of the Society, but only of individual members of it, and their expenses were entirely borne by those in attendance and who looked after their details.

The Mechanical Engineers' Library Association is the owner of the house in which the Society has its rooms, the latter paying to the former a yearly rental in cash and in the form of the right to use its books and periodicals.

The report of the finances of this Association is made to the entire membership of the Mechanical Engineers through the channel of the House and Library Committee, and is appended to this report.

The sleeping apartments upon the upper floors of the Society's house have been abundantly used during the entire year, and in some cases the demand for this accommodation has far exceeded the supply. The plan of having apartments of this sort at the service of non-resident members has been very popular and has been warmly supported, and will be continued as a feature of the Society's life. Those who make use of these facilities find themselves enjoying all home comforts, and the opportunity for meeting their professional brethren in a way which has proved most enjoyable. The income from this source, which passes to the credit of the Library Association, will be seen to reach nearly the sum of $1,600.

LIBRARY ASSOCIATION: ANNUAL REPORT OF THE TRUSTEES OF MECHANICAL ENGINEERS' LIBRARY ASSOCIATION, 1893-1894.

The summary of receipts and disbursements of the Trustees from November 1, 1893, to November 10, 1894, is appended below:

Receipts.

Balance on hand November 1, 1893		$285 54	
Receipts Fellowship Fund	$230 00		
" Sinking Fund	588 00		
" Office Rent	3,900 00		
" Room Rent	1,552 40		
" Contingencies	10 05		
Total Receipts, 1893-1894		6,280 45	
Total Cash			$6,565 99

Digitized by Google

Disbursements.

Interest on Mortgage		$1,485 00	
" on Bonds		1,600 00	
Salaries		840 00	
House Supplies, etc		515 87	
Fuel		267 85	
Lighting. Gas	$212 65		
Lighting. Electric Light	594 39	807 04	
Equipment		363 50	
Laundry		310 00	
Repairs		15 29	
Book Purchase		5 06	
Binding		112 50	
Contingencies		30 00	
Insurance		15 00	
Total Disbursements		$6,366 61	
Cash in Bank to balance		199 38	
			$6,565 99

Assets.

House and lot, 12 W. 31st St., New York City	$65,000 00	
Furniture and equipment	5,000 00	
Books and MSS	10,000 00	
Total	$80,000 00	
Bills Receivable (Office and Room Rent, uncollected)	1,415 79	
" " (Subscriptions to Fellowship Fund, uncollected)	106 00	
" Receivable (Subscriptions to Sinking Fund, uncollected)	464 00	
Total Assets		$81,985 79

Liabilities.

First Mortgage held by N. Y. A. of M	$33,000 00	
Second Mortgage Bonds held by Members of the A. S. M. E	13,000 00	
Second Mortgage Bonds held by Council of A. S. M. E. as an investment	19,000 00	
Total Liabilities		$65,000 00
Excess of Assets over Liabilities		$16,985 79

The tellers appointed to count the ballot for officers presented their report at the conclusion of the foregoing, which had been set up in type and was distributed at the meeting. Their report was as follows:

Digitized by Google

Whole number of ballots cast		544
For President	E. F. C. Davis	540 votes.
" Vice-Presidents	F. H. Ball	554 "
" "	Jesse M. Smith	538 "
" "	M. L. Holman	536 "
" "	Robert Forsyth	1 "
" "	James M. Dodge	3 "
" Treasurer	Wm. H. Wiley	544 "
" Managers	John C. Kafer	547 "
"	Chas. A. Bauer	544 "
"	Arthur C. Walworth	541 "

Twenty ballots were thrown out as informal.

Respectfully submitted, J. H. WEBSTER,
GEO. W. WEEKS.

NEW YORK, *December* 4, 1894.

The next matter of business was the action on certain amendments to the Rules of the Society, of which notice had been given at the Montreal meeting, as required in Art. 45 referring to such amendments. The Chair reported that the amendments as originally proposed had received very careful consideration in the Council, both by the body as a whole and by sub-committees extending over several meetings. He reported to the meeting the unanimous opinion of the Council, that the effect of these amendments will be beneficial to the Society, and that their adoption is recommended. The proposed amendments had been printed side by side with the Rules now in force, and had been distributed in advance of the meeting, to secure their careful consideration by the membership in advance of the session at which they were to be considered. The distribution of the printed amendments by the Secretary at the meeting, and the remarks of the President, were considered as a motion made and seconded that the Society proceed to consider and adopt the proposed amendments. One or two verbal alterations in the proposed Rules were suggested by Mr. Henning, and the motion as amended was put in the form:

Resolved, That the Society proceed to vote on the amendments proposed, such amendments to be subject to slight verbal alterations, which have been suggested and which are to be considered by the Council, and, if approved, incorporated into the accepted amendments.

The Secretary, in presenting the proposed amendments, spoke as follows:

Digitized by Google

The Secretary.—It might be advisable for me to call the attention of the members to the essential changes incorporated into the amendments, which are really very few. Article 2 is to increase the number of persons eligible for membership. The Council, in considering the proposed changes, discovered that there was no provision in the Rules for the eligibility of electrical engineers. The Society is fourteen years old. Its rules were amended ten years ago materially, and the profession of electrical engineering has really grown up during the past ten years, so that the first thing done was to put electrical engineers in among those eligible for membership. And then it was decided to make the article broader, so that we would not need to amend it for the next twenty-five years, for we did not know what new forms of engineering would come up, which leads to the considerable amendment of Article 2, making all persons connected with engineering eligible to admission into the Society. Another thing is to insert in the Rules an age limit, with the idea that probably a man less than thirty years of age, excepting in very remarkable cases, would not have sufficient professional experience to qualify him to be the kind of man we wanted the full members of this Society to be. But there are a great many good men who are not thirty years of age. In order to meet that particular case, the qualifications were widened in Article 6, for a candidate for membership in the associate grade, making them very much higher than for the old associate grade. The junior is practically as it was, that being a grade which has been found very useful. The practical working of these rules will be that a young man coming into the Society as a junior will usually be promoted first to the associate grade, when he has passed the twenty-six-year limit, if he chooses, and from the associate grade he will be then promoted to the full member's grade, when he shall have passed the thirty-year limit. The intent of all this is to enhance the value of membership. All of us who are now members have our membership mean just so much more by the passage of that rule. Then the rest of the amendments following Article 6 are really to put into the Rules practice and procedure which have grown up in the management of the Society's business during the last ten years, and which, while not inconsistent with the Rules, were not definitely specified therein. All the articles following No. 9 really make no practical change in the practice of the Society. Article 8 is a distinct addition, giving to honorary members of the Society the right to

Digitized by Google

vote and to hold office, which they did not have before. It has been thought that any man to whom the title of honorary member could be given was a man on whose judgment we could very properly rely, and who might be an exceedingly valuable officer in the Society; and if that occasion ever arises, then the Rules should not obstruct the practicability of carrying it out.

The President calls my attention to a change in new Article 4, replacing old Article 5. Honorary members, under the old rule, had to be persons of acknowledged professional eminence, who had virtually retired from practice. That cut us out from having some very helpful and excellent honorary members, and a good many of our honorary members have not virtually retired from practice, so that that was simply cut out in order that we might have the benefit of acknowledged professional eminence without decrepitude.

Mr. Jos. C. Platt.—I would like to ask the Secretary one question. He made a statement which rather struck me as indicating that it was the intention that juniors should become associates before becoming members. Is there anything in the rules to make it appear that that is really desired? The word associate in many societies has frequently come to mean people who are akin to its main object and not active in it, and if you say a man is an associate member of this Society, you think he might perhaps be a stock-holder in a manufacturing establishment. He would be an associate, but he might not know anything about the manufacturing, except paying his assessments or getting his dividends. Yet he could properly be said to be associated with mechanical engineers. I ask the question whether it is really expected that a junior shall become an associate before he become a member.

The Secretary.—New Article 6 really provides for two distinct classes of men. To be eligible as an associate the candidate must be not less than twenty-six years of age, and must have the other qualifications of a member. You will see that that puts into the associate grade men who are not less than twenty-six years of age, and have all the other qualifications of membership except the age of thirty years. So that that type of associate is a man who is eligible to promotion to full membership as soon as he passes the thirty-year limit. Then following the word "or" is the other class of associates, which is the one to which Mr. Platt has referred—an associate who is the type of man in bu

Digitized by Google

ness relations with engineers. The council and committee in charge, in considering that question, faced this alternative: either to take in these fairly competent fellows who are between twenty-six and thirty into a fourth grade of membership, or to include them in one of the present grades. It was thought that the associate grade might be made inclusive of these two classes. The man who has the qualifications of membership is eligible to promotion to member after passing thirty years of age; the other is not, no matter how old he is.

As to Mr. Platt's second question, that is covered in Article 12, "Persons desiring to change their grade of membership from junior to associate, or from associate to member, shall make an application in the same manner and on the same form as that required for a new applicant." That is to say, the usual and expected procedure for a junior who passes the twenty-six-year limit will be his promotion into the associate grade, and on passing the thirty-year limit he will be eligible for further promotion. But it is not the intent to compel this double change unless the junior desires it. He can remain a junior till he has passed the age limit, and then seek promotion to full membership at one step. It is expected the double step will be the most usual, as the associate has a vote for officers and members, and the junior has not.

The text of the amendments, which were then before the Society for action, as amended by vote of the Council, with respect to the minor verbal infelicities, was as follows:

ART. 2. All persons connected with engineering may be eligible for admission into the Society.

ART. 3. The Society shall consist of Honorary members, Members, Associates, and Juniors.

ART. 4. Honorary members, not exceeding twenty-five in number, may be elected. They must be persons of acknowledged professional eminence.

ART. 5. To be eligible as a member, the candidate must be not less than thirty years of age, and must have been so connected with engineering as to be competent as a designer, or as a constructor, or to take responsible charge of work in his department, or he must have served as a teacher of engineering for more than five years.

ART. 6. To be eligible as an associate, the candidate must be not less than twenty-six years of age, and must have the other qualifications of a member; or he shall have been so connected with engineering as to be competent to take charge of work and to coöperate with engineers.

ART. 7. To be eligible as a junior, the candidate must have had such engineering experience as will enable him to fill a responsible position, or he must be a graduate of an engineering school.

Digitized by Google

ART. 8. All honorary members, members, and associates shall be equally entitled to the privileges of membership. Juniors shall not be entitled to vote, nor to be officers of the Society.

ART. 9. Nominees for honorary membership must be proposed by at least five members who are not officers of the Society. References shall not be required of a nominee for honorary membership, but the grounds upon which the application is made must be fully set forth in writing and signed by the proposers.

ART. 10. A candidate for admission to the Society, as a member or as an associate, must make an application on a form to be prepared by the Council, which shall contain a written statement giving a complete account of his engineering experience, and an agreement that he will, if elected, conform to the laws, rules, and requirements of the Society. He must refer to at least five members or associates personally known to him. A candidate for admission to the Society as a junior must make an application on the same form, and refer to not less than three members or associates personally known to him.

ART. 11. The referees for each candidate for admission to the Society shall be requested to make a confidential communication on a form to be prepared by the Council, setting forth in detail such information, personally known by the referee, as shall enable the Council to arrive at a proper estimate of the eligibility of the candidate for admission to the Society. Such confidential communications shall be destroyed by the secretary as soon as the vote has been officially declared.

ART. 12. All applications for membership must be presented to the Council and this body shall consider each application, assigning to each, with the applicant's consent, the grade in the Society to which, in its opinion, his qualifications entitle him. The names of those candidates recommended by the Council for election by the Society shall be immediately printed on a ballot, and the ballot mailed at once by the secretary to each voting member of the Society. Persons desiring to change their grade of membership from junior to associate, or from associate to member, shall make an application in the same manner and on the same form as that required for a new applicant.

ART. 13. A member entitled to vote may leave the name of any candidate on the ballot untouched to vote in favor of the admission of the candidate to the Society, or he may erase the name to vote against it. He shall enclose the ballots so approved by him in a sealed blank envelope, and enclose this envelope in a second envelope, on which he shall write his name and mail the same to the secretary of the Society. A ballot without such indorsement shall be rejected as defective. The rejection of a candidate by seven voters shall defeat his election.

ART. 14. The aforesaid envelopes containing the ballots shall be opened by the Council, at any meeting thereof, and the names of those elected shall be announced in the next meeting of the Society. The names of applicants not elected shall not be announced, nor recorded in the proceedings.

ART. 15. Endorsers of any applicant not elected may, within three months after such failure to be elected, lay before the Council written evidence that error was then made. The Council may then, by a three-fourths vote, order another similar ballot by the Society, in which case thirteen negative votes shall be required to defeat the candidate.

ART. 16. Honorary members shall be elected by the unanimous vote of the Council, through a letter ballot, not less than sixty days subsequent to the proposal, a notice of which proposed election shall have been mailed at once by the secretary to each member of the Council.

Digitized by Google

ART. 17. Each person elected, excepting honorary members, must subscribe to the rules of the Society, and pay the initiation fee before he can receive a certificate entitling him to the rights and privileges of the Society, and to wear the emblem appropriate to his grade. If this payment is not made within six months of the election, the same shall be void, unless the time is extended by the Council. The emblems of each grade of membership shall be worn by those only who belong to that grade.

ART. 18. The initiation fee of a member or an associate shall be twenty-five dollars, and the annual dues shall be fifteen dollars, payable in advance. The initiation fee of a junior shall be fifteen dollars, and his annual dues ten dollars, payable in advance. A junior being promoted to any other grade of membership shall pay an additional initiation fee of ten dollars. Any member or associate may become a life member in the same grade, by the payment of two hundred dollars at one time, and shall not be liable thereafter to annual dues.

The Council shall have the power, for special reasons, by unanimous vote, through a letter ballot, to admit to life membership, without the payment of the sum above named, such person as for a long term of years has been a member or an associate, when such a procedure would, in its judgment, be for the best interests of the Society; provided that notice of such action shall have been given at a previous meeting of the Council.

ART. 19. Any member of the Society in arrears may, at the discretion of the Council, be deprived of the publications of the Society; or, when in arrears for one year, he may be stricken from the list of members. Such persons may be restored to the privileges of membership by the Council on payment of all arrears.

ART. 26. Five members of the Council shall constitute a quorum. Members of the Council absent from a meeting may vote by letter upon subjects stated in the call for the meeting, said vote to be deposited with the Secretary.

ART. 29. It shall be the duty of the Publication Committee to receive all papers contributed, and to decide upon which papers, or parts of the same, shall be presented at the professional meetings of the Society. They shall see that all editorial revisions of the proceedings, papers, discussions, and reports are made, and to decide what parts of the same shall be published in the proceedings of the Society. The Council may, at its discretion, revise any action of the Publication Committee.

ART. 35. The annual meeting of the Society shall be held on the first Tuesday of December of each year, in the City of New York, unless otherwise ordered; at which a report of proceedings and an abstract of the accounts shall be furnished by the Council. The Council may change the place of the annual meeting, and shall, in that case, give timely notice to members and associates.

Mr. George Hill.—It seems to me that the new Article 3 of the proposed rules raises a question which has been before the minds of the members, not only of this Society, but of the other great technical societies of the world. The solution which is preferred by the Institution of Civil Engineers of Great Britain, and by the American Society of Civil Engineers, is one which everybody understands, and which has had a meaning well fixed upon it by usage. In these societies the man who lacks only age as a qualifi-

Digitized by Google

cation for membership, is labelled an associate member, although the term is open to criticism as not being good English. Similarly, the term "associate" has been used to designate the non-professional man, and it seems to me that this Society is likely to make a mistake by proposing a solution so totally at variance from that adopted by the other societies, and giving to the word "associate" not only a double significance, but one which is at variance with the accepted designation. I would propose that there be created five grades, instead of four, to be known as Honorary Members, Members, Associate Members, Associates, and Juniors. If, now, this Society adopts an entirely different definition for the term "associate," or rather a dual definition which will not be clear except to the initiated, I feel sure that confusion will be the result From what we have just been told, the associate, under the proposed rules, may mean either a first-class mechanical engineer less than thirty years of age and more than twenty-six, or it may mean a manufacturer, or a financial officer of some manufacturing company; and when from a business man's card or letter head we read the words "Associate A. S. M. E." no one will be able from that designation to determine his professional status. We may have two men side by side, one gray-haired, with his spurs won by his successful ability as a manufacturer, and the other may be a newly elected treasurer or salesman, who seeks to secure coöperation with engineers.

But this is not the principal change which I suggest. I myself have been a sufferer on account of lapses in rules, which I would endeavor to correct, and which I have here reduced to writing, in the form of amendments to the proposed amendments. These depend upon three principles, which in my judgment should be considered together or not at all; and if it is inconvenient to give them prolonged discussion and adequate consideration at this time, I would prefer not to put myself in the position of offering any amendments, as such, at this time, but would withdraw them for the present, and bring them up as new propositions at a later date.

I am heartily in favor of the proposed amendments as an advance over our present rules, and gladly become a seconder to the proposition to adopt them as they stand, with the minor corrections suggested to be incorporated by the Council. At the same time I give notice of my intention, under Article 45, in reference to amendments, to present for consideration what I conside

Digitized by Google

provements in Articles 3, 6, 8, 10, 11, 12, 13, 15, 18, and that I propose to insert a new Article 26, covering a method for the severance of relations to the Society, and new Articles 36 and 37, in reference to the holding of meetings in various cities, and the publication of the Society's *Transactions* in monthly issues, together with the necessary renumbering of articles which these amendments will involve.

Mr. Oberlin Smith.—There is some logic in what Mr. Hill has said about a man having a dual existence, and your not knowing what he is when you see his card. But it seems to me the question is whether it is simpler to have four grades or five grades. We do not want to multiply them. We do not want the names "associate" and "associate member," which sound too nearly alike. Furthermore, if a junior member does not want to go through the grade of associate, and thus be suspected of being a rich, financial man, the logical way is for him to wait until he is thirty, and be a junior meantime. Let the associates be, as they have been, a *doubtful* class, whom we must not trust to be first-rate engineers, for fear they may turn out to be only millionnaires, who are sometimes useful in their place. If any junior wants to go into that grade for four years and then come out of it, it does no harm, only he must risk the loss of reputation he may suffer by being in that grade, and being considered merely rich.

The motion on the adoption of the rules, subject to the slight verbal modifications above referred to, was then put by the President, and passed unanimously.

The Committee on Uniform Methods of Tests and Testing Materials presented through its reporter, Mr. G. C. Henning, a report of progress; and, in connection with that report, a monograph by Mr. W. J. Keep of Detroit was presented, under the title of Relative Tests of Cast Iron. Mr. Keep's monograph received discussion by Messrs. Estrada, West, Mumford, Fritz, and Cartwright, and is published as one of the papers of the meeting hereafter. The report of the Committee was as follows:

PRELIMINARY REPORT OF COMMITTEE ON TESTS AND METHODS OF TESTING MATERIALS.

The Committee during the past summer has gone into the matter of investigating methods and shapes of test-pieces appropriate to determine the true qualities and characteristics of cast iron.

Digitized by Google

The work covered numerous series of tests made on multiple pieces of all the different shapes of bars heretofore used by engineers, builders, founders, and others, both in this country and abroad.

Such test-bars were all prepared in a precisely identical manner, in order to eliminate accidental variations as much as possible. Moreover, two kinds of material were used, and the silicon was varied in a regular manner to determine whether quality and composition would affect results of methods as of shapes. It is intended to make further series of tests with two or three other kinds of pig metal in order to cover all ordinary grades in common use. This work has been very voluminous, and hence could not be completed, but it is so far advanced that the committee feel warranted in promising a complete report for the summer meeting, 1895. It is the plan of the Committee to prepare all of its investigations complete, at once, in order that the members of your Committee can each for himself write monographs on certain points which the tests and investigation may develop, the same as has been done by Mr. W. J. Keep, who will present his conclusions this morning. In this paper the effect of silicon, temperature, and size of test-bar are discussed without relation to actual strength, which will be taken up later. When the great mass of information thus obtained has been thoroughly studied, the Committee will be in a position to draw up a report.

However, as the Committee is without funds, we feel it necessary to ask for voluntary assistance in our work in two directions. The Committee will furnish patterns and flasks, but is in need of test-bars cast from them of gun iron, chill roll, and heavy machinery grades; and as finished bars must also be investigated, we desire to ask for volunteers who will kindly finish a number of these test-bars.

Gus. C. Henning,
Chas. H. Morgan,
W. J. Keep,
E. D. Estrada.

The other paper of the morning session was by Geo. M. Sinclair, entitled "Notes on Steel Forgings," discussed by Mr. Kent.

On motion, adjourned until evening, and the members were invited to a luncheon served at the close of the session in the lower room of the house.

Digitized by Google

Tuesday afternoon, like the succeeding afternoons, was left without definite assignment. Excursion parties could be made up to visit points in or around New York, of which a list was furnished, or the time spent in social and professional interchange at the Society's house, in its library or smoking-rooms. The luncheon in the house was specially designed to keep as many as possible centred around the headquarters to give others a chance to meet them and get to know them. It was desired thus both to give all guests the chance to do what pleased them best, and avoid making a restless hospitality burdensome to those who were to enjoy it. Resident members acted as guides to places of interest, or the time could be utilized for business or other appointments.

THIRD SESSION.—TUESDAY EVENING, DECEMBER 4TH.

On the reassembling of the Society in the Convention Hall at 8.15 in the evening, Mr. Forney spoke as follows, in presenting a series of resolutions:

Mr. M. N. Forney.—If new business is now in order, I desire to bring up the question of the advisability of holding monthly meetings of members of the Association in New York, for the discussion of such technical subjects as we are all or should all be interested in. During the past winter a series of such meetings were held in this room, which it was thought by at least some of those who attended them were sufficiently successful to warrant their continuance. In order, therefore, to bring the subject up for discussion I will offer the following resolution:

Resolved, That the Council be hereby requested to appoint a committee of five members to arrange for a series of monthly meetings, to be held in this room during the following year; that the Committee be authorized to select and appoint a chairman to preside, to fix dates for holding, and to issue calls for such meetings; select subjects for consideration, and speakers to present and discuss them; arrange the order of proceedings, and make all necessary rules for the conduct of such meetings; solicit subscriptions to defray the expenses thereof, and audit and pay all bills incurred for such expenses, and fill vacancies which may occur during the period named.

The motion being seconded, Mr. Forney proceeded to state:

Mr. Forney.—My object in presenting the resolution is to get a full expression of opinion of members, especially the non-residents, with reference to the advisability of holding such meetings. The discussion and consideration of technical subjects is the first and most important object for which we are organized. This

Digitized by Google

Society is not intended to be a social club nor a trade union. It is, or should be, an association of skilful, scientific, and practical engineers, who, when they meet together, should contribute the results of their ripest experience, most profound knowledge and observation, to the conferences which are held here. Every other object, it is believed, should be subordinated to making the discussions which are held under the auspices of this Association interesting and profitable. The aim should be to make such occasions dignified meetings for scientific discussion, and not occasions for jollification and social enjoyment alone, excepting so far as those who attend them may derive pleasure from receiving and imparting knowledge. The meetings should be of such a character that we would all feel proud to bring any distinguished persons to attend them; and whenever any eminent mechanical engineer should visit New York, he should, as a matter of course be invited to attend them. In this way they would become interchanges of engineering experience, which would bring to us here the results of the labors of engineers in all parts of not only the country, but the world over.

It has been argued against the advisability of holding such meetings as are contemplated, which could be attended by only a small proportion of the non-resident members, that they would give the Society a local character, and take from it the broad national scope which it is intended to have, and that dissatisfaction would result if the resident members derived advantages from such meetings which the non-residents could not share. If this feeling exists to any considerable extent, it may be a reason for not meeting together here once a month to discuss subjects for the consideration of which we are organized into a Society, and we would then have the curious anomaly that the members of a mechanical engineers' association are not to have the privilege of doing exactly what they are organized for, excepting under restrictions which in a great measure would defeat the purpose for which they are so organized.

In another association of which I have the privilege of membership, the monthly meetings, which are held in this room, are occasions of many pleasant reunions of resident and non-resident members. Those who have not the inestimable privilege of living under the benign government of Tammany Hall, make it a practice to arrange their business so as to be in New York at the times of the monthly meetings referred to, and it is believed

Digitized by Google

the usefulness of the parent organization—the Master Car Builders' Association—which meets annually, is very much promoted by the monthly meetings, which are held not only in New York, but in Boston, Buffalo, and Chicago as well. A similar result, I confidently believe, will follow the holding of local monthly meetings of members of this Society here, and, perhaps, in other cities as well.

Mr. J. F. Holloway.—Not being among the class of non-resident members, I have waited for some non-resident member to speak on this matter, and what I may say in regard to it will certainly not apply to myself as being a non-resident member. I wish to say in advance that the meetings of last winter were exceedingly pleasant, and, I think, of very considerable benefit; and I wish also to say that a great deal of credit belongs to Mr. Forney for having gotten them up. Now I think that it will be found that the constitution and by-laws of this Society provide for all the meetings which it can properly hold as a society, and that if additional meetings are to be held during the winter, or any other time, the basis on which the Society is organized should be changed to a certain extent. I feel that this is a society that extends broadly all over the United States, having members, I think, in almost every State, and who contribute equally towards its support. Those living in the far West pay for its support as much as we do in New York, and I have the feeling that if meetings are held here under the auspices of the Society every two weeks or so, during the winter, that a man who lived in Ohio, Michigan, or California might very properly feel that the New York members were getting a good deal more out of the Society than he was. Now, this is a national society, and I think the aim of this Society is, that every man, wherever he lives, should have an equal interest in the Society in every way, and an equal right to participate in all its benefits; and I think that if we should adopt the resolutions offered by Mr. Forney it will prove that we who are in New York, and who can avail ourselves of these extra meetings, are really getting a good deal more out of the Society than anybody else can. One of the things that are fundamental to this Society, as I said before, is the fact that we are all equal. We are equal in participating in its benefits, and we are equal in paying the expense. I am heartily in favor of the meetings, and would be very glad, indeed, to have meetings held here, but I think they should be under some other auspices than those of the Society. I

Digitized by Google

think that a club or an association of gentlemen may get together and have meetings here, receive their benefits, and pay the expenses of them, and I am sure that no man, wherever he lives, would object. But they should not be meetings of the Society. They should be meetings of members of the Society, and other gentlemen as well, who would be interested in them. I think this is a subject that ought to be very carefully considered before this innovation in the workings of the Society is adopted. What I have said in the matter I have said in behalf of the out-of-town members, and of what I believe to be for the best interests of all the members.

Mr. Gantt.—It seems to me that Mr. Holloway has voiced the sentiment of a great many of the out-of-town members, and for my part, I am willing to support that idea entirely.

Mr. Newcomb.—I am an out-of-town member, and probably do not get here very often either. I do not agree with Mr. Holloway. I cannot see any objection to this association having its meetings here once in two weeks if they want to, or oftener. We can get the benefit in the papers. I do not want to shut anybody else off from having a good time because I cannot be there myself.

Mr. Francis H. Richards.—This is a matter about which I have been thinking, and in the line of the remarks of the last speaker. It is really a good thing to have these occasional meetings, although as an out-of-town member I can attend only a few of them. At the same time there is some ground for what Mr. Holloway has said. It seems to me the matter of expenses, etc., can be arranged by subscription or otherwise. These winter meetings are more informal than the regular sessions of the Society, and therefore will be an opportunity for those who would not take part in the regular meetings, and who would not present papers to the Society. The Society will get a great deal of material which otherwise would be withheld. Abstracts of the proceedings of these meetings could be edited by the Publication Committee and incorporated in the annual reports, subject to the committee's approval; and the contributions will naturally furnish suggestions for other papers by the same and other contributors. During the past year I remember especially one or two of these meetings which I had the pleasure of attending. The one on the subject of "Testing Machines," I think, was second in interest and value to none that has been held by this Society anywhere. I should be glad if the g

Digitized by Google

work that was done last winter could be continued this winter. But I think that in view of the advantages afforded the local membership by these meetings held in the home of the Society, the proceedings should be reported in full, and the volumes added to the Society's library, and that a suitable committee should make an abstract of that report as a contribution to our *Transactions*. In this way any visiting member may have access to the complete report, and the entire membership will have directly a share in the benefits.

Mr. C. E. Hart.—I heartily agree with the sentiment just expressed by Mr. Richards. It seems to me that as non-resident members, we should not seek in the slightest degree to deprive those of any benefits who happen to be residents here, and who contribute so much to the success of these annual New York meetings. And further than that, it seems to me that the fact that there are meetings held every month here, and that professional questions are discussed, will make this Society's home a point of very great interest and value to each and every member of the association whether he has the opportunity to be present at those meetings or not. He can, as has been suggested, have an opportunity to read an abstract of the report of the meeting, and can get some benefit; and even if he does not, the fact that this association is constantly, during the entire year, contributing to mechanical knowledge by these discussions, it seems to me, is valuable to each and every member whether he is able to be present or not. I heartily favor the project as an out-of-town member.

Mr. W. R. Warner.—I live out among the buffaloes and Indians of Ohio, and I know that several of our members out there, in arranging to come to this little village, look forward and plan to have their visits timed to occur when these meetings are to be held. I have heard several say, "Now I will be present at that engineers' meeting;" and I believe that while it is very generous on the part of this Gothamite who emigrated from Ohio to bring up these objections in his modest way, I think that the out-of-town members would most heartily endorse the other view, and favor the plan of monthly meetings. We want to come down here once in a while, and as there is not much going on in New York, we want something to do of an evening. I most heartily join with Mr. Richards and the other gentlemen who favor this view, and I hope these meetings will be held so that we can have some

Digitized by Google

entertainment when we come down to New York. Another point—these New York fellows occasionally have bright ideas, and we want to get hold of them, and they cannot keep them until the next annual or semi-annual meeting. Let them express themselves here, and send us the report of their doings.

Mr. Forney's resolution was then put and carried.

The technical papers of the evening were then presented and discussed. That of the Messrs. Webber, reporting "Tests of a Vertical, Triple-Expansion Condensing Pumping-Engine," at the Trenton water-works, being discussed by Dr. C. E. Emery; the joint paper of Professors Peabody and Miller, on "Tests of the Triple-Expansion Engine" at the Massachusetts Institute of Technology, was discussed by Professor Jacobus.

The report of the Society's committee on "Standard Gauges for Thickness of Wire and Metal," presented its report of progress through its Chairman, Professor Egleston. The report was as follows:

To the American Society of Mechanical Engineers:

Gentlemen: The Committee on Gauges respectfully report that during the past year they have corresponded with a number of American Societies, but that only one has taken any definite action. On November 7th they met by appointment in Philadelphia a committee of the American Railway Master Mechanics' Association. At this meeting the following resolutions were passed:

"*Resolved*, That we, the members of the Joint Committee of the American Society of Mechanical Engineers and the American Railway Master Mechanics' Association, earnestly deprecate the use of any of the numerous wire and sheet metal or other trade gauges now in vogue, and strongly urge the use of thousandths of an inch for all kinds and classes of small measurements.

"In practice we recommend the use of micrometer calipers or notched gauges, the latter with notches of dimensions suited to the convenience of the different industries, and, where necessary, different selections of sizes in thousandths of an inch, suited to each trade, being incorporated in their working-gauges; provided, however, that these are always dimensioned in thousandths of an inch, and marked in terms thereof, the number of thousandths being marked opposite each gauge notch, thus, .001.

"We further recommend that the members of the various engineering societies assist the introduction and general adoption of this system by using it in their own work."

Your Committee during the year have corresponded with seven societies in England, two in France, one in Belgium, one in Ger-

Digitized by Google

many, one in Austria, and two in Canada, and with influential gentlemen and prominent government officials in most of these countries. The result of the correspondence has been that the authorities in England, as individuals, have already declared themselves in favor of the adoption of the principle of giving the measurement of diameters and thicknesses in a decimal system, and of the abolition of the present gauge system. They have unhesitatingly said that they not only preferred, but would advocate, a decimal system, and that they would prefer the 100th of a millimetre as a measure, though they did not think it wise to advocate it at the present time, but that they were unequivocally in favor of abolishing the whole system of arbitrary gauges.

Owing to loss of letters by mail, the German Society has taken no action, but is expected to do so within a short time, though prominent individuals in Germany have declared the system proposed of recording diameters and thicknesses in a decimal system to be the most convenient form of measurement, and have expressed themselves decidedly in favor of abolishing the system of arbitrary gauges.

The societies and authorities of Austria have not been heard from.

The French government has abolished the arbitrary gauge system absolutely, and has made the legal measurement to be the 100th of a millimetre.

The action, therefore, seems likely to be unanimous in favor of the abolition of arbitrary gauges, and of adopting a decimal system for diameters and thicknesses.

The authorities in some of these countries have been anxious that their governments should be solicited to abolish the gauge, and have pointed out to the committee the way of doing it.

The Canadian Society of Civil Engineers have appointed a Committee to coöperate with your Committee.

The only decisive action of the year has been the abolishing of the arbitrary gauge system by the French government, which is a decided progress.

The Committee therefore propose that this Society recommend to its members and other societies in the United States to abandon the system of arbitrary gauges, and to use a decimal system giving the actual thicknesses and diameters of the pieces.

Your Committee, therefore, propose the following resolution:

Digitized by Google

Resolved, That the American Society of Mechanical Engineers recommend to their members, and urge upon all persons using a gauge system, to abandon the use of arbitrary gauges, and to give the actual thicknesses and diameters in a decimal system.

The Committee ask to be continued.

[Signed] THOS. EGLESTON,
G. T. WELLMAN,
OBERLIN SMITH,
GEO. M. BOND,
SCHUYLER S. WHEELER.

On motion, the report of the Committee was accepted, and the Committee continued.

Professor Egleston.—I move the adoption of the resolution appended to the report.

Dr. Emery.—I will second that motion, Mr. Chairman, and in connection with it say a word. The system of measuring in thousandths of an inch is already pretty well established, and among electrical people, at least, a thousandth of an inch is known as a "mil." It is suggested that this term should be understood generally by all the branches of the kindred profession, as it is certainly very useful. Some call that system the Edison system, because in his early work Mr. Edison found it very difficult to keep track of the various gauges, and he had them all put into thousandths of an inch. In the wire tables of manufacturers the sizes are designated by mils as well as gauge numbers, and I think that both will be continued in spite of all resolutions.

Professor Egleston's motion was carried.

Mr. Oberlin Smith.—Is it in order for me to make a slight correction? Dr. Emery's remarks unintentionally might lead some of us to think that in what is known as the Edison system the number of mils involved in measurement was expressed in the gauge number. That is not so. The so-called Edison gauge has a set of numbers of its own, based on the area of the cross-section of the wires, entirely different from the Whitworth gauge, which does have the actual number of mils expressed in its number.

Dr. Emery.—I have only heard of the Edison gauge incidentally. From Mr. Smith's remarks, it appears that the "mil" as now accepted is not the same as that of Edison. It is now accepted as measuring one-thousandth of a linear inch, besides which there are square mils and circular mils, and the three make the system pretty nearly perfect.

Digitized by Google

Dr. S. S. Wheeler.—I think Dr. Emery's suggestion of using the word "mil" is a valuable one, because "mil" is shorter than "thousandths of an inch," and I think that the length of the latter expression was perhaps one of the most important objections to this proposed system. As to the Edison gauge, I have served in the Edison Company myself some time in the early days, and handled a great many of their conductors. They generally use the word "mil," or "circular mil," in reference to the *area* of the conductor, and as the measure is so small they have to use them in thousandths; so that an Edison two hundred and fifty conductor means a round bar having an area of two hundred and fifty thousand circular mils.

Mr. F. W. Dean presented three papers under the following titles: "Trial of a Leavitt Pumping Engine," "Trials of a Recent Compound Engine with a Cylinder Ratio of 7.1," "Changing the Suction System of a Pumping Engine," and in the discussion Messrs. Rockwood, Platt, Emery, Kent, Hale, and Towl took part. Professor Lanza's paper on "Tests of the Strength of Spruce Columns" closed the session.

FOURTH SESSION.—WEDNESDAY, DECEMBER 5TH.

This session was convened at 10.30 A.M. for professional papers. Prof. C. V. Kerr read a paper on the "Theory of the Moment of Inertia;" discussed by Professors De Volson Wood and Lanza.

Mr. Chas. T. Porter presented, under four separate titles, the features of a new design of engine, as follows: "Comparison of the Action of a Fixed Cut-off and Throttling Regulation, with that of the Automatic Variable Cut-off on Compound and Triple Expansion Engines," "Description of a Cam for Actuating the Valves of High-Speed Steam Engines," "Description of an Improved Steam Separator and an Improved Steam Jacket," "Description of an Improved Centrifugal Governor and Valve."

The debate was participated in by Messrs. Richards, Rockwood, Thurston, Oberlin Smith, Kent, Binsse, Dean, Forney, and Hutton.

Professor Lanza presented his two papers on "Stresses in the Rims and Rim-Joints of Pulleys and Fly-Wheels" and on "The Application of Brakes to the Truck-Wheels of a Locomotive." Mr. Kent took part in the discussion.

The final paper of the session was that by Prof. W. F. M.

Digitized by Google

Goss, reporting an "Experimental Study of the Action of the Counter-Balance in Locomotive Drive Wheels upon the Pressure of Contact between Wheel and Rail." In the interesting debate on this paper, Messrs. Forney, Morison, Webb, Strong, Dean, Lanza, Porter, McGeorge, and Oberlin Smith took part.

The meeting then adjourned.

The afternoon, after luncheon served in the banquet-room, was left free for social opportunity in the house, for excursions to points of interest, and for the individual business of the members. A large number remained every afternoon in the parlors for the opportunities of attendance which this arrangement permitted.

The evening of Wednesday was devoted to a reception and social reunion, held in the smaller ballroom at Sherry's, Fifth Avenue and Thirty-seventh Street. The members, with their ladies, were received on entering, and were introduced to the retiring president and the president-elect, and a little after nine o'clock the retiring president delivered his address, selecting as his topic, for presentation in a less formal way, the relations which the ladies represented in the membership might bear with profit to the organization. Supper was served at the close of the address, and dancing was enjoyed until a late hour. Over 420 persons were present.

Fifth Session.—Thursday, December 6th.

In the absence of President E. B. Coxe the chair was, on motion, taken by ex-President John Sweet.

The first paper was by Mr. C. J. Field, on "Present and Prospective Development of Electric Tramways," and received discussion by Messrs. Henning, Oberlin Smith, Partridge, Perry, Hale, Scheffler, Childs, J. C. Platt, John Platt, and Rockwood. The paper by M. P. Wood, in continuation of the first paper read at Montreal in June, 1894, on "Rustless Coatings for Iron and Steel," was discussed by Messrs. Henning, Boyer, Cartwright, Durfee, Roelker, John Platt, Kent, Davis, McElroy, Hawkins, Wellman, and Holloway. The paper by Prof. D. S. Jacobus, entitled "Results of Experiments to Test the Accuracy of Small Throttling Calorimeters," was discussed by Messrs. Carpenter and Kent.

Pursuant to announcement, an informal session was arranged for the afternoon of Thursday, after luncheon, to give an opportunity for further discussion on certain questions relating to cast

Digitized by Google

iron. The discussion touched also the monograph of W. J. Keep on "Testing Cast Iron," and elicited reports of practical experience from a number of the members. Professor Sweet was requested to take the chair, and Messrs. Keep, Holloway, Davis, Fritz, West, Henning, Kent, Cartwright, Hawkins, Durfee, Hutton, Wood, John Platt, and Sweet took part in the discussion. The remarks, which recorded experience of value, will be incorporated into the record of the meeting, under a suitable heading. Mr. Holloway presented a specimen of iron coming from a cylinder casting which had been through the conflagration of a building in which the engine had stood, and this subject was also made a matter of comment and experience.

In the evening of Thursday no assignment of regular session was made, but the evening was left free to be used in visits to central electric light and power stations and other points, where the evening presented the best time for inspection, and others used the evening for visits to theatres and other engagements.

Sixth Session.—Friday, December 7th.

In the continued absence of President E. B. Coxe, the chair was, on motion, taken by Mr. E. F. C. Davis, president-elect.

The first paper was by Prof. J. H. Barr, entitled "Experiments on a System of Governing by Compression," discussed by Professors Thurston and Jacobus. The paper by J. C. Platt, entitled "Straightening a Leaning Chimney One Hundred Feet High," was succeeded by that of Mr. A. W. Robinson, on "Drawing Office Appliances." This was supplemented by Messrs. Woodbury and Henderson.

The paper by L. S. Randolph, "Strength of Railway Car Axles," was discussed by Messrs. Henderson, Durfee, Gillis, Estrada, Pomeroy, Parsons, Henning, Hibbard, and Wood. Mr. Henderson's paper on "A Graphical Method of Designing Springs" was discussed by Messrs. Randolph and Kent, and was succeeded by the concluding paper of the session, by Mr. D. L. Barnes, entitled "Rail Pressures of Locomotive Driving-Wheels." This was discussed by Messrs. Goss, Parsons, Kent, Barr, Henderson, Morison, and Strong.

At the conclusion of the regular business the Secretary was instructed to tender, on behalf of the meeting, the sincere thanks of the members to those persons or firms whose courtesy had con-

Digitized by Google

tributed opportunities for the making of visits of professional interest during the meeting.

Up to the hour of adjournment the time was devoted to the discussion of the best telephone system for connecting departments of a large works with each other and with the central office, by Mr. Woodbury, and to a presentation of the new carbide of calcium product for making illuminating gas. The principles of the manufacture and the qualities of the product were presented by Mr. Wood, and commented on by Messrs. Kent, Durfee, and Gillis.

The chairman then declared the Convention adjourned, and that the next meeting might be expected in the summer of 1895, in the city of Detroit, Mich.

It was the generally expressed opinion that this New York meeting, while up to date the largest numerically, was also one of the most enjoyable and successful meetings that the Society had ever held.

The afternoons of the days upon which the sessions were held were left without assignment, for the members visiting New York to attend to personal business affairs, or to make such visits as their inclination and interest might dictate. This policy replaced the usual one prevailing elsewhere, of providing official excursions for the party as a whole.

The policy inaugurated in 1892, of having a light luncheon served in the banquet-room at the close of the professional sessions of each morning, was maintained this year also with marked success. It added to the pleasure of the members attending the meetings, and was the means of keeping together those who had assembled for the discussion of papers. Many of the members remained at the house for conversation and social intercourse during the afternoons.

The list of places available for members to visit in New York was as follows:

I. Morgan & Quintard Iron Works.
II. North River Iron Works.
III. Pond Machine Tool Works.
IV. Stevens Institute of Technology.
V. Columbia College, School of Arts, Law, Mines.
VI. Columbia College, School of Medicine (College of Physicians and Surgeons).
VII. Pratt Institute.
VIII. Washington Bridge.

Digitized by Google

IX. Shipyards and Works; S. L. Moore & Sons Co.
X. World Building; Equitable Building.
XI. Metropolitan Museum of Art.
XII. Museum of Natural History.
XIII. East River Gas Works.
XIV. Ball & Wood Engine Co.
XV. Power Houses, Broadway Cable Road.
XVI. Power House, 125th Street Cable Road.
XVII. The Brooklyn Navy Yard.
XVIII. The Gas Engine and Power Co.

Digitized by Google

DCVII.*

CHANGING THE SUCTION SYSTEM OF A PUMPING ENGINE.

BY F. W. DEAN, BOSTON, MASS.

(Member of the Society.)

RECENTLY the city of Taunton, Mass., brought water from the Lakeville ponds, some seven miles distant, to their water works pumping engines, through a 30-inch main, and under a head of 30 pounds pressure at the engines. Before this was done the engines had raised water 21 feet, by suction, from a basin fed by springs along the edge of the Taunton River.

As the new supply came into town under a head, it was decided to connect the new main directly to the suction-pipe of the Gaskill engine, and thus secure an obvious economy in pumping water. Accordingly the writer was asked by Mr. Desmond Fitzgerald, member A. S. C. E., consulting engineer to the city of Taunton, to prepare a design for the new suction system, and to arrange it so that the engine could either take the water as before from the old basin, or under a head from the new supply. As the case is one of interest and possessing some novelty, it is now presented to the Society.

In preparing the design, the obvious possible difficulty of using the same pump-valves without additional springs or weights to seat them promptly under the new conditions presented itself, as well as the importance of effectively absorbing the inertia of a 30-inch column of water several miles long.

When the change was completed and the engine started under the head, to the surprise of everybody it worked as quietly as under the old system, and has so continued, without any change in the valves. The engine makes from 7 to 15 revolutions per minute under domestic pressure, and under fire pressure (the direct supply system being used) 10 to 25 revolutions per min-

* Presented at the New York meeting (December, 1894) of the American Society of Mechanical Engineers, and forming part of Vol. XVI. of the *Transactions*.

Digitized by Google

ute, and to this slow speed is doubtless due the success of the valves in both systems.

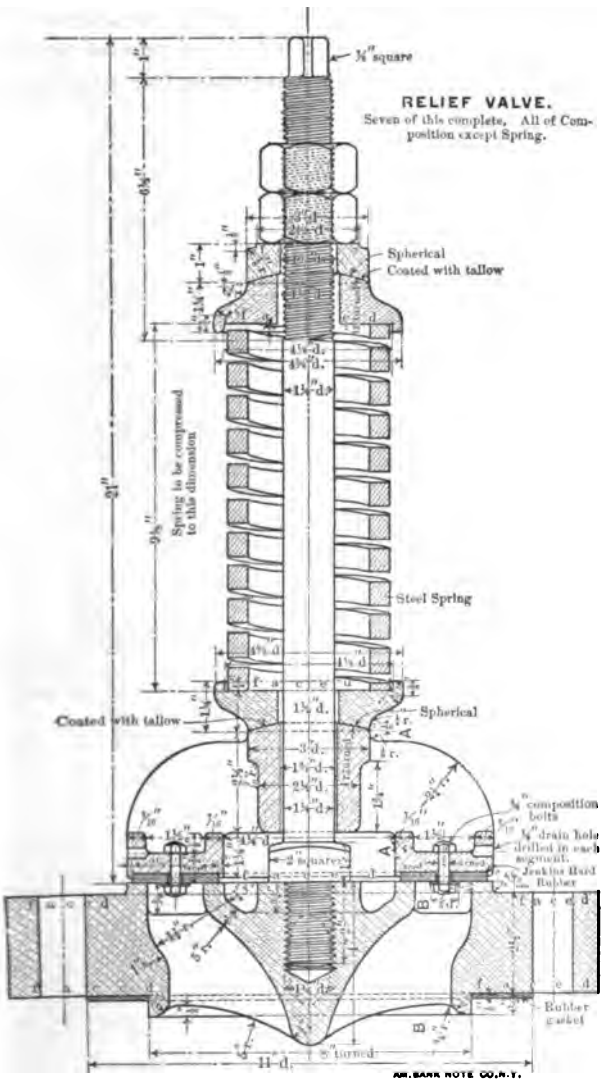

FIG. 1.

The methods of absorbing the inertia of the surge of the 30-inch column of water were two in number. There is an air chamber 4 feet in diameter and some 15 feet high placed over

Digitized by Google

the extreme end of the supply main, which was considered ample in size to meet any fluctuation in pressure, provided it was kept properly supplied with air. In order, however, to avoid any rupture or dislodgment of parts when the air chamber is improperly filled, seven 6-inch spring relief valves were designed to allow the water to escape to waste when the pressure reached

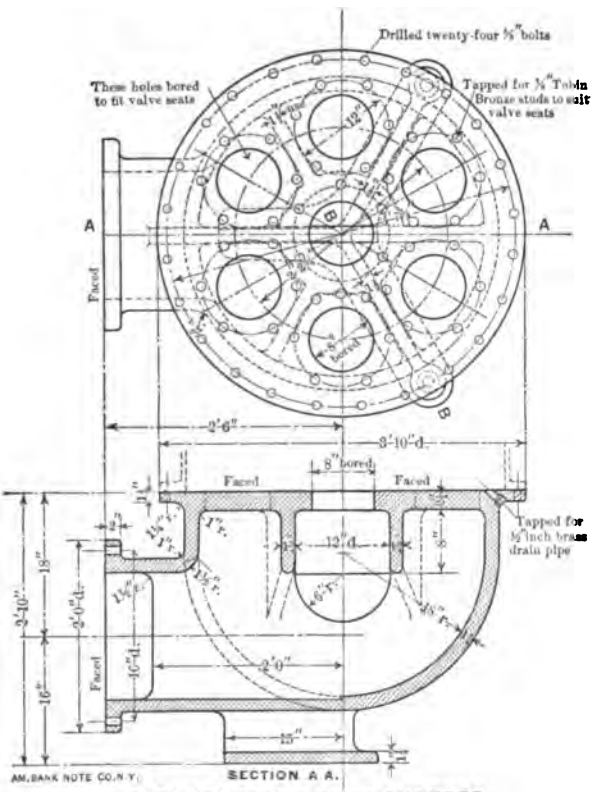

BASE FOR RELIEF-VALVE CHAMBER.
One of this Cast iron.
Scale ½ inch = 1 foot.

FIG. 2.

a prescribed maximum (Fig. 1). While these valves cannot provide the elasticity which is desirable in handling water, and which the air chamber amply supplies, they limit the pressure to which this water can rise when any unusual surge occurs. The occasions of such occurrences are sometimes when reducing the speed of the engine from fire to domestic service. The

Digitized by Google

valves are set to lift at 40 pounds per square inch, and they successfully limit the water pressure to that amount.

The relief valves are made with a spherical jointed spindle

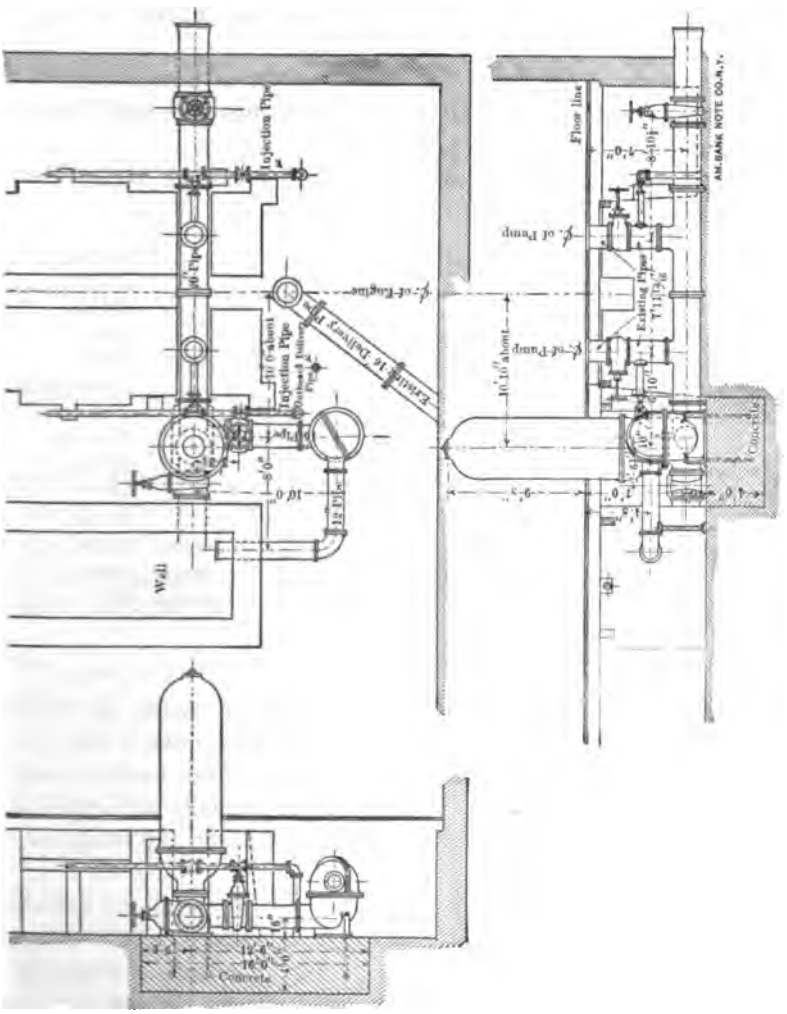

FIG. 3.

and nut, as shown in the engraving, in order to allow them to seat squarely if the springs should tend to incline them. They are grouped on a bowl-shaped casting covered by a light cast-iron cover, from which the waste pipe passes (Fig. 2).

There is an arrangement of gates in the suction piping, such

Digitized by Google

that the engine can draw water from the basin or receive it from the new supply, as before mentioned, and a gate for shutting the water from the group of relief valves when desired for any purpose. When the old system is used, the air-chamber becomes a vacuum chamber, and takes the place of one furnished originally (Fig. 3).

The waste water from the relief valves is conducted to the old pump well, and the fall of the water into the well forms an audible tell-tale of their operation.

The engine is of the usual Gaskill form, of the following general sizes:

Diameter, high-pressure cylinder	16 in.
" low-pressure "	32 in.
" pump plungers	18 in.
Stroke of each piston	28 in.
" " plunger	28 in.
Rated capacity in 24 hours	4,000,000 gals.
Number of revolutions per minute, domestic pressure	7 to 15.
" " " fire "	10 to 25.
Suction lift, old system	21 ft.
Suction head, new system	69 ft.
Steam pressure by gauge	75 lbs.
Coal used in 24 hours, old system	about 2,600 lbs.
" 24 " new "	about 1,900 lbs.
Saving in coal	about 27%.

DISCUSSION.

Mr. Forrest M. Towl.—For a number of years the stations pumping petroleum through the different pipe lines in the United States have been accustomed to take the oil from tanks at various heights above the pumps. These tanks are usually so located as to give a pressure of from two to fifty pounds on the intake of the pumps.

When the Southern Pipe Line was built it was found expedient to locate the relay pumping stations in valleys where coal and water could be easily obtained. This location necessitated a change either in the system of connecting up the lines or a considerable loss of power. It was at first decided to locate the relay tanks on the top of the controlling hill, but as that would divide the working force of the stations, it was decided to allow a station to take its supply from the incoming main. The station at State Line, Pa., may be taken as a typical, though extreme, example. State Line receives its supply from Watson, 33.32 miles distant,

Digitized by Google

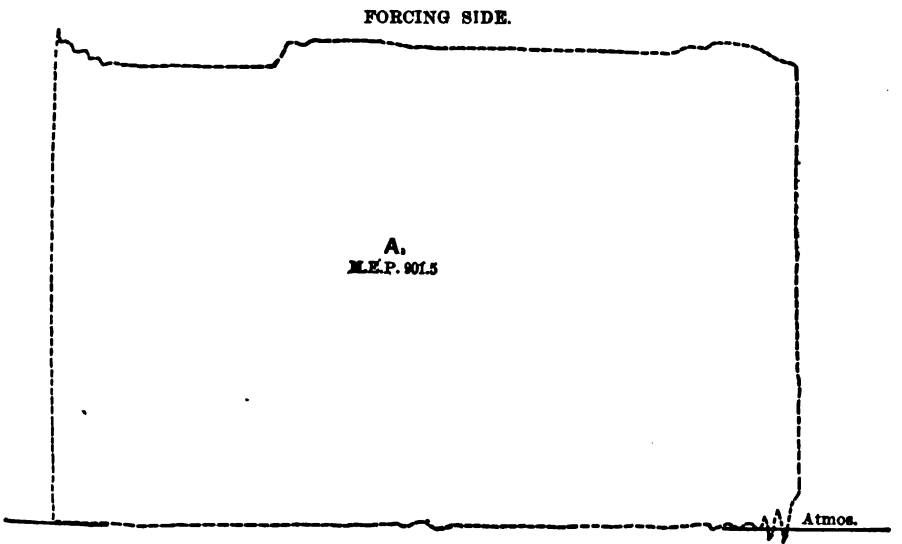

FIG. 4.

and the point which controls the pumping of Watson is located 8.12 miles west of, and 2,148 feet above, the pumps at State Line. When both stations are running at their average speed, State Line can have a pressure of 400 pounds on its intake, at which point it begins to interfere with the pumpings from Watson. The ordi-

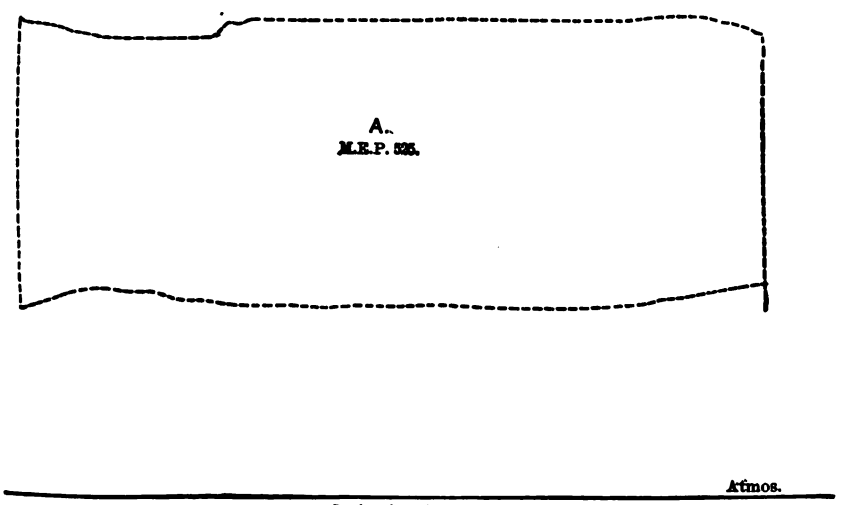

FIG. 5.

Digitized by Google

FORCING SIDE.

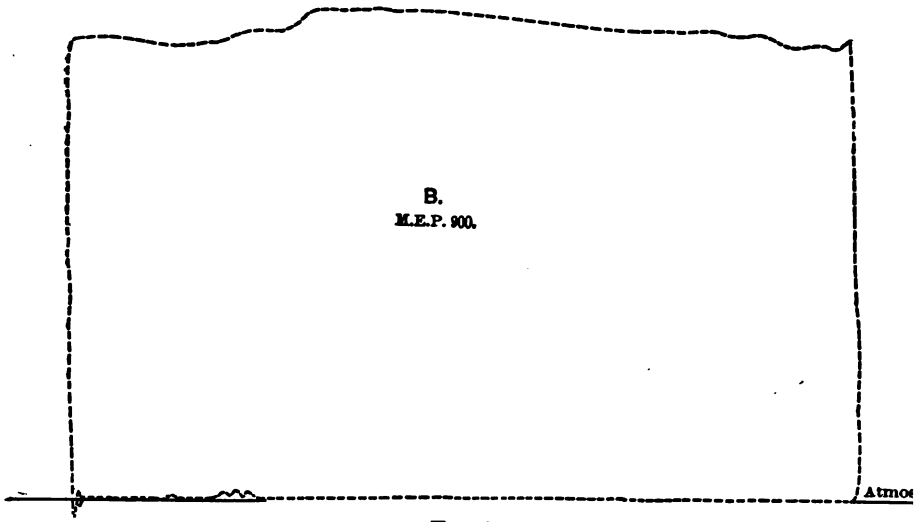

FIG. 6.

nary working pressure at State Line is 375 pounds on the intake, and 900 pounds on the discharge.

The only changes made in the connections to allow of the using of this pressure on the intake are the insertion of a relief valve, which will allow the incoming stream to pass into a tank in case

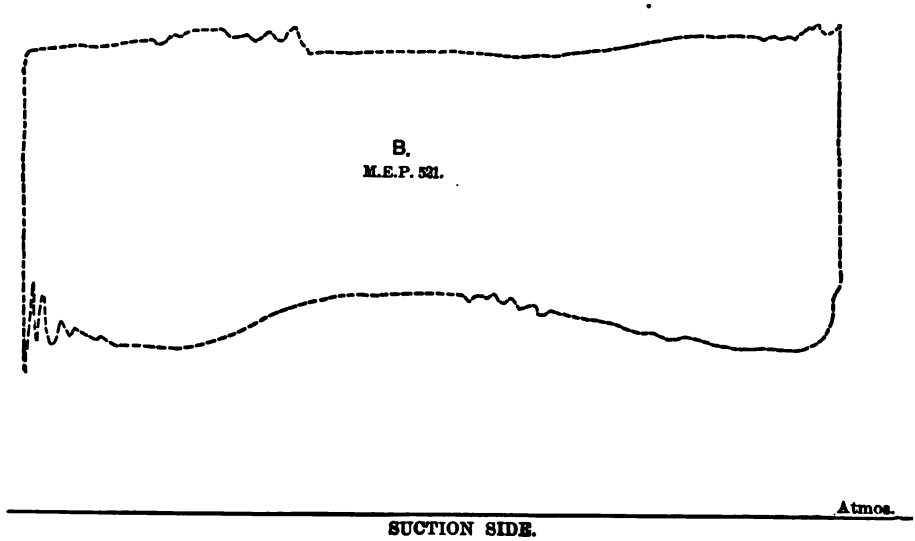

SUCTION SIDE.

FIG. 7.

Digitized by Google

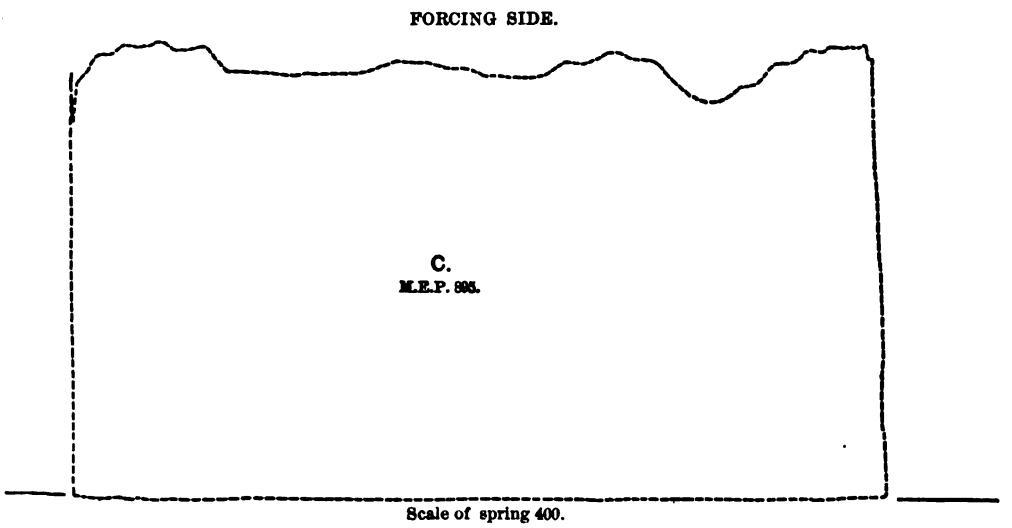

FIG. 8.

it becomes necessary to shut down without first notifying Watson, and the insertion of a check valve, which allows State Line to take its supply from the tank when it has reduced the head in the line to that of the tank. The valve springs are the same which are used under two pounds intake pressure at other stations. No air chamber has been introduced, and none seems to be necessary.

The pumps work better with the pressure on the intake, and

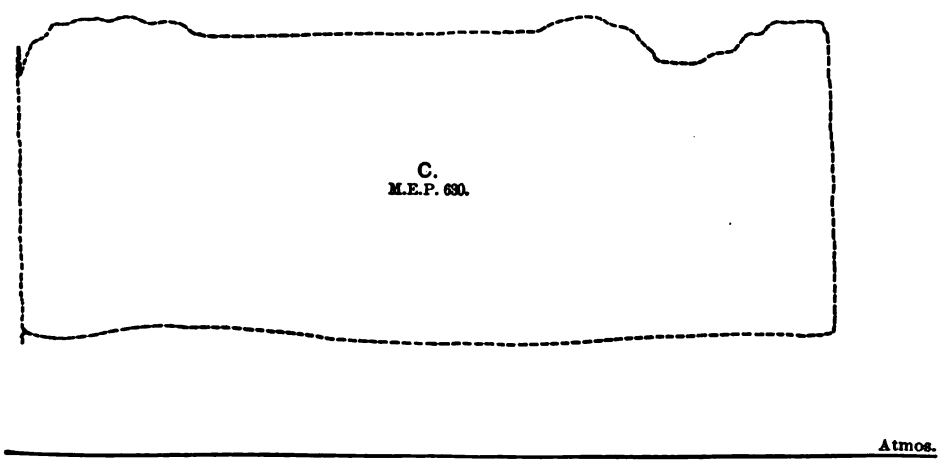

FIG. 9.

Digitized by Google

the speed of the pump at State Line is regulated, to a considerable extent, by the pressure on the intake.

At a test recently made at State Line, it was found that, after allowing for the friction of the pumps, the saving was practically in proportion to the differences between the intake and discharge pressures. The cards herewith were taken from the oil cylinders of the pumps at State Line; set *A* (Figs. 4 and 5), from a triple-expansion engine built by the National Transit Company, and having six oil plungers, and set *B* (Figs. 6 and 7), taken from a Worthington engine having four oil plungers. The variation in the pressure on the intake of the six-plunger pump was about 60 pounds, while that on the four-plunger pump was about 120 pounds. The slip of the pumps was 1.86 and 3.09 per cent. respectively, with 375 pounds intake pressure, and 2.35 and 4.15 per cent. with two pounds on the intake.

On the oil pipe lines, there are ten stations operated in the same manner as State Line. The pressures on the intake vary from 100 to 375 pounds. In one instance, the oil does not go into a tank until it has passed through four relay stations. Very little trouble is experienced in regulating the speed of the stations.

Cards C (Figs. 8 and 9) were taken from a four-plunger Worthington engine at Cameron Mills, N. Y. This engine has not the high duty attachment, and the intake pressure is nearer constant. This is probably due to the more regular piston speed during the stroke.

Digitized by Google

DCVIII.*

TRIAL OF A VERTICAL TRIPLE-EXPANSION CONDENSING PUMPING ENGINE, AT THE TRENTON WATER-WORKS.

BY SAMUEL WEBBER, CHARLESTOWN, N. H., AND S. S. WEBBER, TRENTON, N. J.

(Members of the Society.)

In reporting to the American Society of Mechanical Engineers the results of this trial, we desire to state that it was not undertaken as a complete duty test, to include the performance of both engine and boilers, nor was it desired to obtain all the data respecting the economical working of the engine. The Board of Public Works of the city of Trenton, N. J., only desired to have proved that the terms of the contract made by them and the Edward P. Allis Company, of Milwaukee, the builders of the pumping-engine, had been complied with.

The capacity and duty guaranteed by this contract were that the pumping-engine should be capable of delivering into the reservoir against a head of 120 feet 10,000,000 U. S. gallons every twenty-four hours, and to do this at a speed of thirty revolutions per minute, and show a duty of 125,000,000 foot-pounds for every 1,000 pounds of feed-water pumped into the boilers; steam to be supplied to the engine at a pressure of 110 pounds per square inch. No account was to be taken of the fuel consumption; it was, however, decided, for the sake of information, and from a desire to obtain as full data respecting the trial as could be had without special and elaborate preparation, to weigh all fuel used during the test, indicate the engine, take a record of steam temperature and pressure, and test the quality of the steam by calorimeter; and, so far as this was undertaken, we believe the figures obtained are correct.

Before beginning the trial it was agreed between the parties

---

*Presented at the New York meeting (December, 1894) of the American Society of Mechanical Engineers, and forming part of Vol. XVI. of the *Transactions*.

Digitized by Google

in interest to accept the theoretical plunger displacement for the measure of water pumped, making no allowance for slip or leak of valves. The plungers being outside packed, all leakage at that point was easily prevented, and during the trial amounted to so little as not to be worth reckoning. The indicators used were in perfect order, and the springs had all been accurately calibrated and adjusted. All feed-water pumped to boilers was actually measured and weighed by using two tanks, filling the measuring tank to an overflow pipe set vertically, with sharp edges at orifice, and after the water had settled to an exact level the outlet valve was opened, and the water run entirely out into the second tank, from which it was pumped to boilers. No heater was used. The engine ran with remarkable steadiness and smoothness during the trial, and every condition prevailed to insure accuracy.

The quality of the steam was tested by a calorimeter at three intervals during the trial, and gave precisely the same readings, the result showing a percentage of moisture in the steam of 1.25 per cent. It is the writer's opinion that this determination is of no especial consequence as affecting the economical performance of the engine. The small amount of moisture present in the steam must have the same temperature, and as this is much higher than that of the steam as it leaves the engine, the difference must have been available and capable of doing work, and the weight of this moisture should not be wholly deducted from the steam charged against the engine.

All the cylinders and receivers are steam jacketed, the high-pressure cylinder jacket receiving steam from the main steam-pipe; from the high-pressure jacket the steam passes to the first receiver jacket, thence to the intermediate cylinder jacket, thence to the second receiver jacket, and finally to the low-pressure cylinder jacket, whence it is connected to a steam trap discharging into the hot well. The drainage from the several jackets is likewise piped to the hot well. The amount of steam condensed in jackets was not measured, hence no expression of the value of these jackets can be given from the trial. It would seem, however, from the high duty obtained, that the jackets were a factor of economy.

The valve-gear is of the usual Corliss type, with Reynolds improvements. In general design, though of less capacity, the engine is similar to those built by the Allis Company for Chicago

Digitized by Google

and Milwaukee. These engines are so fully illustrated and described in Dr. Thurston's paper, "On the Maximum Contemporary Economy of the High-Pressure Multiple-Expansion Steam-engine," read before the American Society of Mechanical Engineers at the New York meeting in 1893, and printed in Volume XV. of the *Transactions*, that nearly every one interested is, no doubt, quite familiar with the design and operation of this type of engine; hence it is not again necessary to describe the details of construction.

TABLE OF DIMENSIONS OF ENGINE AND PUMPS.

Number of steam cylinders	3
Diameter of steam cylinders	20½, 36, 52 ins.
Stroke of pistons and plungers	36 ins.
Diameter of piston-rods (two at one end each piston)	2⅝ ins.
Area " " " " " " " " "	4.43 sq. ins.
Net area steam cylinders:	
High-pressure	325.63 sq. ins.
Intermediate-pressure	1,013.44 sq. ins.
Low-pressure	2,119.29 sq. ins.
Ratio of cylinders:	
High-pressure	1
Intermediate-pressure	3.083
Low-pressure	6.484
Cylinder clearances:	
High-pressure	2.05%
Intermediate-pressure	1.97%
Low-pressure	1.90%
Number of water plungers (single acting)	3
Diameter " " "	25½ ins.
Area " " "	500.74 ins.
Displacement of each plunger per stroke	18,026.64 cu. ins.
Total displacement of all plungers per stroke	234.11 gallons.

TABLE OF PRESSURES, TEMPERATURES, AND QUANTITIES.

Temperature of water pumped	59° Fahr.
" " " fed to boilers	59° Fahr.
Average pressure steam in boilers as per gauge	112.27 lbs.
" " " " main at engine gauge	112.27 lbs.
" " " " first receiver gauge	23.18 lbs.
" " " " second receiver gauge	— 1.75 lbs.
" vacuum in pounds as per gauge	12.00 lbs.
" total head of water pumped against	119.62 ft.
Duration of trial	8 hours.
Average number of revolutions per minute	30.71
Total number of single plunger strokes	14,741

Digitized by Google

Total weight water fed to boilers in 8 hours		25,295.00 lbs.
Percentage of moisture in steam as per calorimeter		1.25%
Average M. E. P. in high-pressure cylinder		45.15 lbs.
" " " intermediate-pressure cylinder		12.75 lbs.
" " " low-pressure cylinder		6.95 lbs.
Average H.P. developed in high-pressure cylinder	82.03	
" " " " intermediate-pressure cylinder.	72.08	
" " " " low-pressure cylinder	81.59	
Total H.P. developed in all cylinders		235.70

TABLE OF PRINCIPAL RESULTS.

Total foot-pounds of work done in 8 hours	8,442,879,215
Total number gallons pumped in 8 hours	8,451,015
Equivalent number gallons lifted 119.62 feet per 24 hours	10,353,040
Foot-pounds duty per 1,000 lbs. feed-water	136,233,000
" " " " 100 lbs. coal burned	129,090,000
" " " " 1,000,000 B. T. U.	117,800,000
Pounds feed-water used per indicated H.P. per hour	13.41
Total indicated H.P. of engine	235.70
Value in H.P. of water pumped	217.35
Friction loss of engine and pumps in H.P.	18.35
Percentage of useful effect	92.3%
Gallons pumped per 24 hours (in terms of contract)	10,113,680
Foot-pounds duty per 1,000 lbs. feed-water (in terms of contract)	133,856,000
" " " over and above terms of contract	8,856,000

BOILER DIMENSIONS.

Kind of Boilers: Horizontal Tubular.

Number of boilers	3
Diameter of shell	54 ins.
Length of shell	15 ft.
Number of tubes	48
Diameter of tubes	3½ ins.
Heating surface each boiler	779.10 sq. ft.
Grate area each boiler (54 ins. x 54 ins.)	20.25 sq. ft.
Ratio grate area to heating surface	34.17
Kind of grate: "Tupper," set 28 inches below boiler.	
Smoke flue for three boilers	36 ins. x 36 ins.

QUANTITIES AND TEMPERATURES.

Average temperature of flue during test	350° Fahr.
Total coal consumed	2,667 lbs.
Total refuse and ashes	163 lbs.
Net amount of combustible	2,504 lbs.
Per cent. ashes	.06
Kind of coal, "Lehigh Egg."	

Coal was burned by natural draught from an iron stack eighty feet high.

Digitized by Google

RESULTS.

Actual evaporation per pound of coal, feed-water at 59° Fahr.....	9.48 lbs.
Equivalent evaporation, from and at 212°.....	11.05 lbs.
" " per pound of combustible, from and at 212°.	11.67 lbs.
Coal burned per hour per sq. ft. grate surface	4.71 lbs.
" " " " " indicated H.P.....	1.42 lbs.
Water evaporated per hour per sq. ft. grate surface.....	44.69 lbs.
" " " " " " " heating surface.....	1.293 lbs.

The results show a very high efficiency for a triple engine working with so low an initial pressure as 112 pounds of steam; and had the vacuum obtained been better the results would have

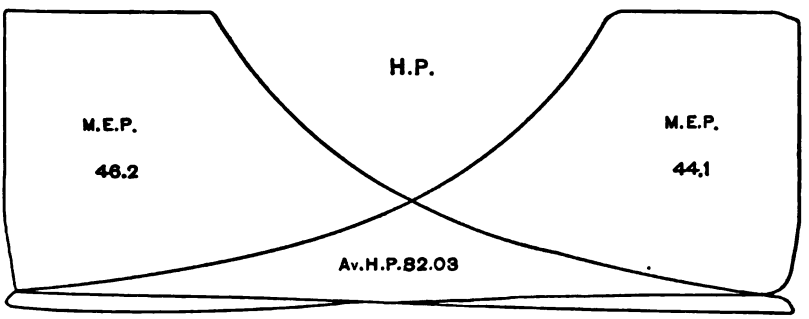

FIG. 10.

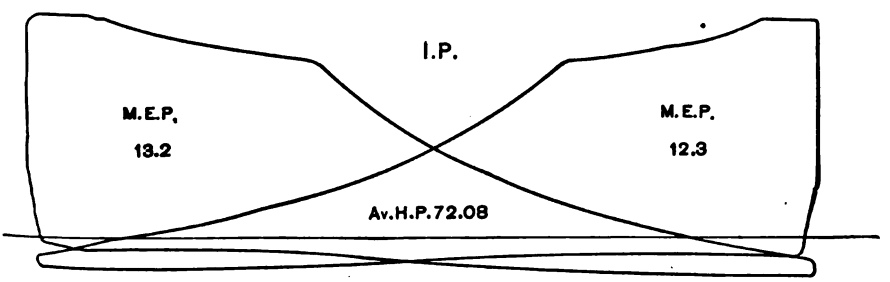

FIG. 11.

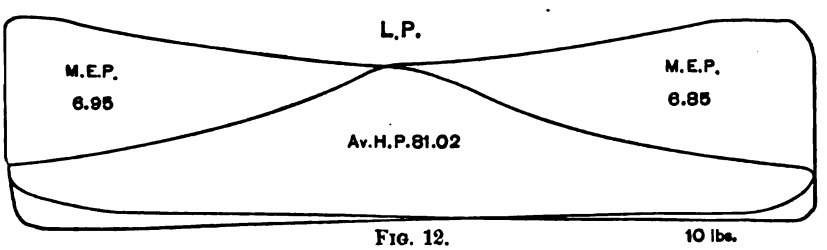

FIG. 12.

Digitized by Google

been correspondingly increased. For some cause, which at the time of trial could not be ascertained, the vacuum did not go below 12.5 pounds, and the average throughout the trial was 12 pounds; it should have been 13.5 pounds at least for an average. The indicator cards (Figs. 10–12) show a fairly even distribution of power; the intermediate cylinder not showing its proportionate share of the work as compared with that of the high

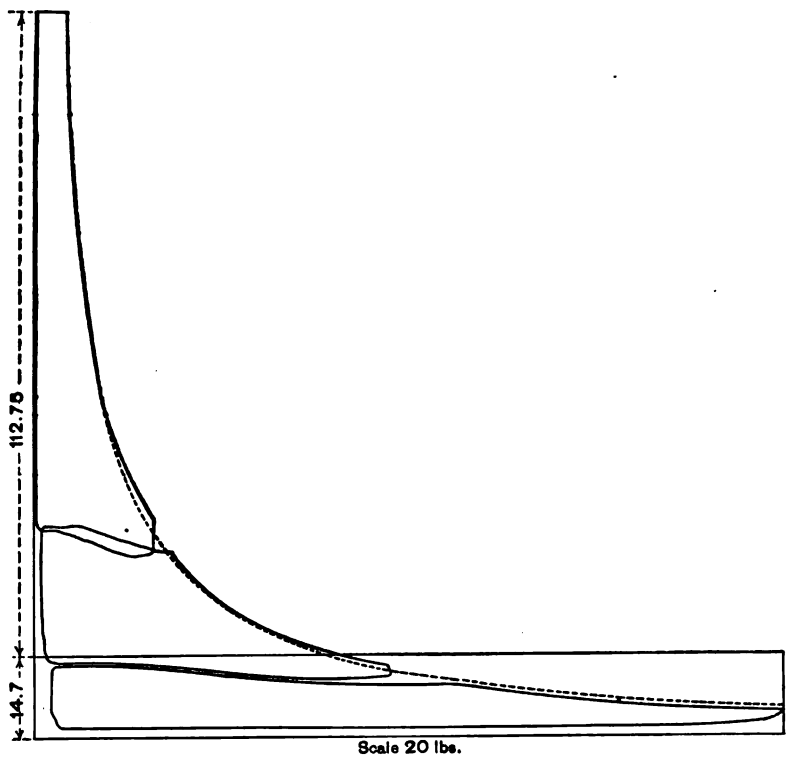

FIG. 18.

or low-pressure cylinders. The combined diagram (Fig. 13) shows a close agreement in the expansion lines with the hyperbolic curve. The clearances are small, due to placing the Corliss valves in the cylinder heads instead of at the ends of the cylinder castings, as is the usual practice. If the initial pressure had been 125 pounds, as in the case of the engines at Chicago and Milwaukee, and a more perfect vacuum been obtained, the efficiency of the engine at Trenton would, no doubt, quite equal that recorded for the engines above men-

Digitized by Google

tioned; possibly the higher head, under which these engines pumped, contributed to very high duty shown by them as compared with that given in this report. All things considered, the Allis engine at Trenton is certainly one of the best examples of the modern high-duty pumping-engine.

The E. P. Allis Company was represented during the trial by its mechanical engineer, Mr. John H. Lewis; and the city of Trenton by the writers of this paper.

DISCUSSION.

Dr. Charles E. Emery.—As there will be several papers here this evening relative to the subject of engine economy, and particularly two which refer to the economy of compound engines, it is well enough to examine the results of this test, and in a sense forecast what the result should be for the others. By looking at the indicator diagrams on page 53, we find that the low pressure diagram is entirely below the atmospheric line, and altogether of too small an area to give maximum economy, and that if the work done in the intermediate cylinder were transferred to the large cylinder, it would undoubtedly give better service. The ratio between the intermediate and low pressure cylinders is about 1 to 2.1, as will be seen on the first page. The mean pressure in the intermediate cylinder is 12.3 pounds, equivalent to about six pounds in the low pressure cylinder, which, added to the 6.9 pounds already there, would give less than 13 pounds, which is not extraordinary for a low-pressure cylinder, and should, in fact, give better results than a lower mean pressure. It is therefore evident from the diagrams that a compound engine should do as well as a triple compound proportioned like the one described.

*Mr. Samuel Webber.**—I fully agree with Dr. Emery, that under the pressure of the test a double compound engine would probably have given equally satisfactory results. We noticed the deficient vacuum in the last cylinder, and so state, by which we lost 1.5 pounds pressure; but we had no time to remedy the matter, as the legal existence of the "Board of Trade," for whom the tests were made, expired on Monday, the test having been made on Saturday, and the report was required to be in their hands before Monday night.

With 160 pounds steam, and the hot well completed, so that we could use the condenser water, we should have undoubtedly obtained a higher result.

* Author's closure, under the Rules.

Digitized by Google

DCIX.*

SOME TESTS OF THE STRENGTH OF SPRUCE COLUMNS.

BY GAETANO LANZA AND EDWARD F. MILLER, BOSTON, MASS.

(Members of the Society.)

THERE are, available to the engineer, the following published results of reliable tests of the strength of full-size American timber columns.

1. A large number of tests of yellow pine and of white pine columns, made on the Emery testing-machine at Watertown Arsenal by Mr. Howard.

2. A certain number of tests of yellow pine and of oak columns, made on the same machine, under the direction of G. Lanza, some of the oak being green, and some very thoroughly seasoned.

3. Some tests of spruce columns, made on the same machine, under the direction of Mr. J. R. Freeman, all but three of which were tested with the load eccentric, showing crushing strengths of 4,088, 6,225, and 4,900 pounds per square inch respectively, and which Mr. Freeman says were of "well-seasoned spruce of excellent quality." Hence, it would seem desirable to obtain some more results of tests of the strength of spruce columns of ordinary average quality, such as is in common use.

In this paper we have to present to the Society the results of thirteen tests of spruce columns, made on the Emery testing machine, in the laboratory of applied mechanics of the Massachusetts Institute of Technology, in the course of the regular laboratory work.

The spruce was purchased at Boston lumber yards, and was of fair average quality, just such as is ordinarily sold for building purposes, all being fairly well seasoned.

---

* Presented at the New York meeting (December, 1894) of the American Society of Mechanical Engineers, and forming part of Vol. XVI. of the *Transactions*.

Digitized by Google

The decrease in a gauged length of either 50 or 100 inches, under different loads, was measured on two opposite sides, and averaged.

The apparatus used for this purpose is shown (on the forward side) in Fig. 14; all of it being fastened to the column, except the micrometer, which is held in the hand of the observer.

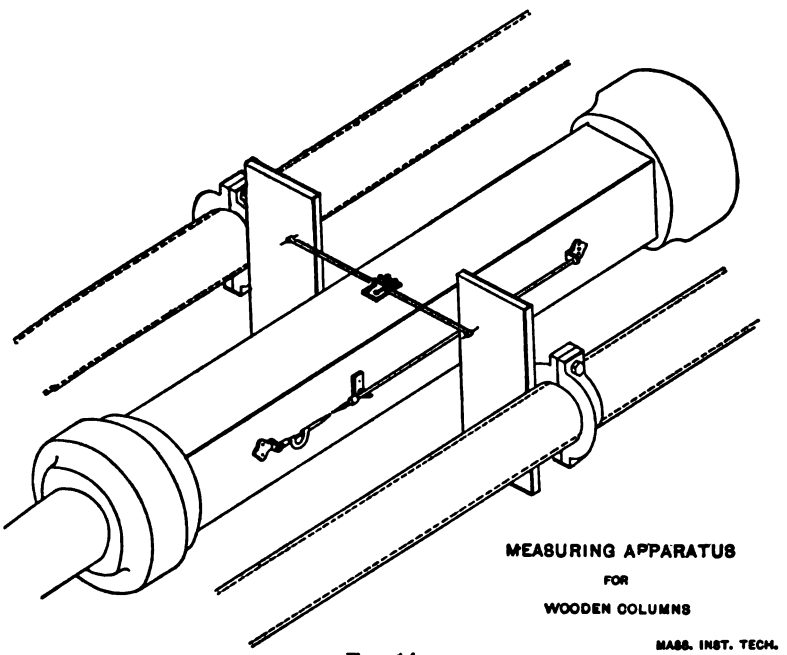

FIG. 14.

The cut also exhibits the means employed to observe the deflection of the column at the middle of its length.

For this purpose a small metal bar, provided at each end with a needle point, was attached at the middle of its length to the middle of the upper side of the column; the needle points being used to mark the amounts of horizontal and vertical deflections on pieces of cross-section paper tacked on two boards fastened on rings which are attached to the main screws of the machine.

The results from the two pieces of cross-section paper are averaged to obtain the actual horizontal and vertical deflections.

The object of averaging the results from the two pieces of cross-section paper is to make up for any possible twisting of the column. The summary table will be given first, and then the details of the individual tests will follow.

Digitized by Google

COMPRESSION OF SPRUCE COLUMNS.

No. of Test.	Date.	Weight.	Gauge length.	Size of Column.			Sectional area.	Ratio of length to least side.	Ultimate Strength.		Ratio of stress to strain, commonly called modulus of elasticity.	Remarks.
				Length.		Width.	Depth.			Actual.	Lbs. per sq. in.		
	1894.	Lbs.	In.	Ft.	In.	In.	In.	Sq. in.					
1	Mar. 19	226	100	17	.0	8.00	8.00	64.00	25.50	155,000	2422	1,297,800	Deflected diagonally.
2	" 20	276	"	18	.0	8.25	8.06	66.52	26.79	140,000	2105	1,385,600	" "
3	" 21	357	"	16	.0	10.00	10.00	100.00	23.00	274,000	2745	1,656,300	" " Crushed 5 ft. from platform.
4	" 23	337	"	15	.0	10.00	10.00	100.00	18.00	261,300	2613	1,552,800	" downward. " at centre.
5	Apr. 3	162	"	11	1.00	8.13	8.13	66.02	16.37	180,000	2727	1,405,200	" diagonally. " 4½ ft. from platform.
6	" 4	188	"	9	10.75	8.00	12.13	97.00	14.84	191,000	1969	1,009,200	" horizontally. " 1′ 3″ from resp'c't ends.
7	" 6	182	"	9	7.88	7.88	12.00	94.50	14.71	188,500	1995	982,540	" downward. " at knot 18″ from end.
8	" 26	126	50	9	0.13	8.13	8.13	66.02	13.31	191,500	2901	1,439,900	Crushed 1′ from platform.
9	" "	100	"	7	6.00	8.13	8.13	66.02	11.07	170,800	2507	1,442,700	" 6″ " "
10	" "	133	"	9	6.38	8.13	8.13	66.02	14.45	175,700	2662	1,357,800	" 8′ " "
11	" "	66	"	7	8.38	7.75	7.75	60.06	8.82	191,900	3195	1,222,400	" 1.5′ " "
12	" "	66.5	"	5	9.75	7.88	7.88	61.03	9.00	156,000	2556	884,270	" " " "
13	" "	104	"	7	11.00	8.25	8.25	67.03	11.69	175,400	2617	857,380	" " " "

Digitized by Google

TESTS OF WOODEN COLUMNS.

Specimen spruce: Dimensions—Width, 8 in.; depth, 8 in.; length, 17 ft. Date, March 19, 1894.

1	2	3	4	5	6	7	8	9	10	11	12	13	14	15
North Side.						South Side.								
Loads, pounds.	Micrometer readings.	Average reading.	Diff. between average.	Deflection.		Loads, pounds.	Micrometer readings.	Average reading.	Diff. between average.	Deflection.		Mean of columns 4 and 10.	Mean of columns 5 and 11.	Mean of columns 6 and 12.
				Ordinates.	Abcisse.					Ordinates.	Abcisse.			
10,000	.8930	.....	.....	...	...	10,000	.8774	.....	.....	....	...	.....	...	...
.....	.8931	.8931	.....	.16	.36	.....	.8774	.8774	.....	1.06	.16	.....	.71	.26
20,000	.8778	.....	.....	...	...	20,000	.8660	.....	.....	....	...	.....	...	...
.....	.8780	.8779	.0152	.16	.39	.....	.8661	.8661	.0118	1.01	.18	.0133	.59	.29
30,000	.8664	.....	.....	...	...	30,000	.8555	.....	.....	....	...	.....	...	...
.....	.8663	.8664	.0115	.22	.43	.....	.8556	.8556	.0105	.89	.20	.0110	.56	.32
40,000	.8533	.....	.....	...	...	40,000	.8434	.....	.....	....	...	.....	...	...
.....	.8535	.8534	.0130	.28	.47	.....	.8436	.8435	.0121	.76	.23	.0126	.52	.35
50,000	.8420	.....	.....	...	...	50,000	.8330	.....	.....	....	...	.....	...	...
.....	.8422	.8421	.0113	.28	.48	.....	.8330	.8330	.0105	.72	.24	.0109	.50	.36
60,000	.8287	.....	.....	...	...	60,000	.8211	.....	.....	....	...	.....	...	...
.....	.8291	.8289	.0132	.29	.50	.....	.8213	.8212	.0118	.65	.25	.0125	.47	.38
100,000	.....	.....	.....	.43	.68	100,000	.....	.....	.....	.16	.35	.....	.29	.52

Compression measured in a length of 100 inches.
Weight of column, 226 lbs.
Maximum load, 155,000 lbs.

Maximum load per sq. in. sectional area, 2,421.9 lbs.
Ratio of stress to strain from 10,000 to 60,000 lbs. = 127,800.
Manner of breaking, deflected diagonally.

Digitized by Google

TESTS OF WOODEN COLUMNS.

Specimen spruce: Dimensions—Width, 8¼ in.; depth, 8 1/16 in.; length, 18 ft. Date, March 20, 1894.

1	2	3	4	5	6	7	8	9	10	11	12	13	14	15
North Side.						South Side.								
Loads, pounds.	Micrometer readings.	Average reading.	Diff. between average.	Deflection.		Loads, pounds.	Micrometer readings.	Average reading.	Diff. between averages.	Deflection.		Mean of columns 4 and 10.	Mean of columns 5 and 11.	Mean of columns 6 and 12.
				Ordinates.	Abscisse.					Ordinates.	Abscisse.			
10,000	.7283	.....	.....	...	...	10,000	.8895	.....	.....	...	...	.....	...	...
.....	.7285	.7284	.....	.51	.47	.....	.8896	.8896	.....	.34	.50	.....	.43	.49
20,000	.7195	.....	.....	...	...	20,000	.8776	.....	.....	..	...	.....	...	...
.....	.7193	.7194	.0090	.45	.46	.....	.8775	.8776	.0120	.17	.49	.0105	.31	.48
30,000	.7098	.....	.....	...	...	30,000	.8655	.....	.....	...	...	.....	...	...
.....	.7097	.7098	.0104	.25	.46	.....	.8656	.8656	.0120	.06	.47	.0112	.16	.47
40,000	.6984	.....	.....	...	...	40,000	.8553	.....	.....	...	...	.....	...	...
.....	.6986	.6985	.0113	.21	.41	.....	.8554	.8554	.0102	.03	.48	.0107	.12	.45
50,000	.6878	.....	.....	...	..	50,000	.8445	.....	.....	...	...	.....	...	...
.....	.6877	.6878	.0107	.20	.42	.....	.8447	.8446	.0108	.01	.48	.0108	.11	.45
60,000	.6767	.....	.....	...	...	60,000	.8327	.....	.....	...	...	.....	...	...
.....	.6767	.6767	.0111	.15	.42	.....	.8328	.8328	.0118	—.01	.48	.0115	.07	.45
100,000	.....	.....	.....	.03	.45	100,000	.....	.....	.....	—.11	.48	.....	—.04	.47

Compression measured in a length of 100 in.
Weight of column, 276 lbs.
Maximum load, 140,000 lbs.

Maximum load per sq. in. sectional area = 2,104.8 lbs.
Ratio of stress to strain between 10,000 and 60,000 lbs. = 1,385,600.
Manner of breaking, deflected diagonally.

Digitized by Google

TESTS OF WOODEN COLUMNS.

Specimen spruce: Dimensions—Width, 10 in.; depth, 10 in.; length, 16 ft. Date, March 21, 1894.

1	2	3	4	5	6	7	8	9	10	11	12	13	14	15
North Side.						South Side.								
				Deflection.						Deflection.				
Loads, pounds.	Micrometer readings.	Average reading.	Diff. between average.	Ordinates.	Abcissæ.	Loads, pounds.	Micrometer readings.	Average reading.	Diff. between average.	Ordinates.	Abcissæ.	Mean of columns 4 and 10.	Mean of columns 5 and 11.	Mean of columns 6 and 12.
10,000	.9823	....	.....	....	...	10,000	.7726	.....	.....	...	...	.....	...	...
.....	.9825	.9824	.....	.78	.10	.....	.7723	.7724	.....	.80	.15	.....	.79	.13
20,000	.9766	.....	.....	....	...	20,000	.7648	.....	.....	...	...	.....	...	...
.....	.9767	.9766	.0058	.85	.09	....	.7651	.7649	.0075	.82	.12	.0067	.84	.11
30,000	.9737	.....	.....	....	...	30,000	.7578	.....	.....	...	...	.....	...	...
.....	.9737	.9737	.0029	.97	.11	.....	.7576	.7577	.0072	.77	.15	.0051	.87	.13
40,000	.9680	.....	.....	....	...	40,000	.7518	.....	.....	...	...	.....	...	...
.....	.9678	.9679	.0058	1.01	.11	.....	.7518	.7518	.0059	.77	.15	.0059	.89	.13
50,000	.9612	.....	.....	....	...	50,000	.7452	.....	.....	...	...	.....	...	...
.....	.9614	.9613	.0066	1.05	.12	.....	.7452	.7452	.0066	.77	.15	.0066	.91	.14
60,000	.9534	.....	.....	....	...	60,000	.7385	.....	.....	...	...	.....	...	...
.....	.9537	.9535	.0078	1.13	.14	.....	.7388	.7386	.0066	.78	.16	.0072	.96	.15
100,000	.....	.....	.....	1.35	.20	100,000	.....	.....	.....	.70	.20	.....	1.03	.20

Compression measured in a length of 100 in.
Weight of column, 357 lbs.
Maximum load, 274,500 lbs.

Maximum load per sq. in. sectional area = 2,745 lbs.
Ratio of stress to strain from 10,000 to 50,000 lbs. = 1,656,300.
Manner of breaking, diagonal deflection, crushed 5 feet from platform.

Digitized by Google

TESTS OF WOODEN COLUMNS.

Specimen spruce: Dimensions—Width, 10 in.; depth, 10 in.; length, 15 ft. Date, March 23, 1894.

1	2	3	4	5	6	7	8	9	10	11	12	13	14	15
North Side.						South Side.								
				Deflection.						Deflection.				
Loads, pounds.	Micrometer readings.	Average reading.	Diff. between average.	Ordinates.	Abcisse.	Loads, pounds.	Micrometer readings.	Average reading.	Diff. between average.	Ordinates.	Abcisse.	Mean of columns 4 and 10.	Mean of columns 5 and 11.	Mean of columns 6 and 12.
10,000	.7226	.....	.....	...	...	10,000	.9688	.....	.....	...	...	.....	...	...
.....	.7226	.7226	.....	.90	.60	.....	.9688	.9688	.....	.58	.18	.....	.74	.44
20,000	.7130	.....	.....	...	...	20,000	.9664	.....	.....	...	...	.....	...	...
.....	.7132	.7131	.0095	.77	.63	.....	.9665	.9665	.0023	.52	.20	.0059	.65	.42
30,000	.7026	.....	.....	...	...	30,000	.9630	.....	.....	...	...	.....	...	...
.....	.7028	.7027	.0104	.61	.61	.....	.9632	.9631	.0034	.58	.19	.0069	.57	.40
40,000	.6938	.....	.....	...	...	40,000	.9598	.....	.....	...	...	.....	...	...
.....	.6938	.6938	.0089	.58	.59	.....	.9596	.9597	.0034	.52	.20	.0062	.55	.40
50,000	.6856	.....	.....	...	...	50,000	.9545	.....	.....	...	...	.....	...	...
.....	.6857	.6857	.0081	.53	.57	.....	.9545	.9545	.0052	.51	.22	.0067	.52	.40
60,000	.6778	.....	.....	...	...	60,000	.9493	.....	.....	...	...	.....	...	...
.....	.6776	.6777	.0080	.49	.55	.....	.9494	.9493	.0052	.52	.22	.0066	.51	.39
100,000	.....	.....	.....	.26	.57	100,000	.....	. ...	.....	.59	.19	.....	.43	.38
200,000	.....	.....	.....	−.43	.70	200,000	.....	....	.....	.90	.14	.....	.24	.42

Compression measured in a length of 100 in.
Weight of column, 337 lbs.
Maximum load, 261,300 lbs.

Maximum load per sq. in. sectional area, 2,613 lbs.
Ratio of stress to strain between 10,000 to 60,000 lbs. = 1,552,800.
Manner of breaking, deflected downward, crushed at centre.

Digitized by Google

TESTS OF WOODEN COLUMNS.

Specimen spruce: Dimensions—Width, 8¼ in.; depth, 8¼ in.; length, 11 ft. 1 in. Date, April 8, 1894.

1	2	3	4	5	6	7	8	9	10	11	12	13	14	15
North Side.				Deflection.		South Side.				Deflection.				
Loads, pounds.	Micrometer readings.	Average reading.	Diff. between average.	Ordinates.	Abcisse.	Loads, pounds.	Micrometer readings.	Average reading.	Diff. between average.	Ordinates.	Abcisse.	Mean of columns 4 and 10.	Mean of columns 5 and 11.	Mean of columns 6 and 12.
10,000	.7600	.....	.....	..	...	10,000	.7576	.....	.....	...	...	....	...	...
.....	.7601	.7601	.....	.12	.10	.....	.7575	.7576	. ...	.30	.25	.....	.21	.18
20,000	.7424	.....	.....	...	...	20,000	.7551	.....	.....	...	...	.....	...	...
.....	.7424	.7424	.0176	.11	.15	.....	.7552	.7552	.0024	.29	.30	.0100	.20	.23
30,000	.7241	.....	.....	...	...	30,000	.7512	.....	.....	...	...	.....	...	...
.....	.7243	.7242	.0182	.10	.18	.....	.7512	.7512	.0040	.28	.33	.0111	.19	.26
40,000	.7008	.....	.....	...	...	40,000	.7475	. ....	.....	...	...	.....	...	...
.....	.7008	.7008	.0234	.09	.22	.....	.7473	.7474	.0038	.27	.36	.0136	.18	.29
50,000	.6875	.....	.....	...	...	50,000	.7444	.....	.....	...	...	. ....	...	...
.....	.6876	.6876	.0132	.07	.26	.....	.7441	.7442	.0032	.26	.40	.0082	.17	.33
60,000	.6698	.....	.....	...	...	60,000	.7398	.....	.....	...	...	.....	...	...
.....	.6698	.6698	.1078	.06	.29	.....	.7400	.7399	.0043	.25	.43	.0111	.16	.36
100,000	.....	.....	.....	.02	.38	100,000	.....	.....	.....	.27	.50	.....	.15	.44

Compression measured in a length of 100 inches.
Weight of column, 162 lbs.
Maximum load, 180,000 lbs.

Maximum load per sq. in. sectional area, 2,727 lbs.
Ratio of stress to strain from 10,000 to 60,000 lbs. = 1,405,200.
Manner of breaking, deflected diagonally, crushed 4½ ft. from platform.

Digitized by Google

TESTS OF WOODEN COLUMNS.

Specimen spruce: Dimensions—Width, 8 in.; breadth, 12½ in.; depth, 9-10¼ in. Date, April 4, 1894.

1	2	3	4	5	6	7	8	9	10	11	12	13	14	15
			North Side.						South Side.					
				Deflection.						Deflection.				
Loads, pounds.	Micrometer readings.	Average reading.	Diff. between average.	Ordinates.	Abscisse.	Loads, pounds.	Micrometer reading.	Average reading.	Diff. between average.	Ordinates.	Abscisse.	Mean of columns 4 and 10.	Mean of columns 5 and 11.	Mean of columns 6 and 12.
10,000	.7250	.....	.....	...	...	10,000	.8083	....	.....	...	...	.....	...	...
.....	.7252	.7251	.....	.52	.35	.....	.8083	.8083	.....	.26	.19	.....	.39	.27
20,000	.7093	.....	.....	...	...	20,000	.8038	.....	.....	...	...	.....	...	...
.....	.7093	.7093	.0158	.53	.37	.....	.8039	.8039	.0045	.24	.22	.0102	.39	.30
30,000	.6936	.....	.....	...	...	30,000	.7992	.....	.....	...	...	.....	...	...
.....	.6935	.6936	.0158	.53	.40	.....	.7990	.7991	.0048	.23	.23	.0103	.38	.32
40,000	.6800	.....	.....	...	...	40,000	.7926	.....	.....	...	...	.....	...	...
.....	.6799	.6800	.0136	.54	.41	.....	.7925	.7926	.0065	.22	.24	.0101	.38	.33
50,000	.6662	.....	....	...	..	50,000	.7850	.....	.....	...	...	.....	...	...
.....	.6663	.6663	.0137	.54	.42	... ..	.7852	.7851	.0075	.21	.25	.0106	.38	.34
60,000	.6540	.....	....	...	...	60,000	.7778	.....	.....	...	...	.....	...	...
.....	.6589	.6540	.0123	.55	.43	.....	.7778	.7778	.0078	.20	.26	.0101	.38	.35
100,000	.....	.....	.....	.57	.47	100,000	.....	.....	.....	.18	.30	.....	.38	.39

Compression measured in a length of 100 inches.
Weight of column, 188 lbs.
Maximum load, 191,000 lbs.

Maximum load per sq. in., sectional area=1969 lbs.
Ratio of stress to strain from 10,000 to 60,000 lbs. 1,009,200.
Manner of breaking, deflected horizontally, crushed 1½ inches from ends.

Digitized by Google

TESTS OF WOODEN COLUMNS.

Specimen spruce: Dimensions—Width, 7⅞ in.; depth, 12 in.; length, 9 ft. 7⅞ in. Date, April 6, 1894.

1	2	3	4	5	6	7	8	9	10	11	12	13	14	15
North Side.						South Side.								
Loads, pounds.	Micrometer readings.	Average reading.	Diff. between average.	Deflection. Ordinates.	Deflection. Abcisse.	Loads, pounds.	Micrometer readings.	Average reading.	Diff. between average.	Deflection. Ordinates.	Deflection. Abcisse.	Mean of columns 4 and 10.	Mean of columns 5 and 11.	Mean of columns 6 and 12.
10,000	.9380	.....	....	...	..	10,000	.7712	.....	....	...	...	....	...	...
.....	.9382	.9381	....	.57	.03	.....	.7710	.7711	....	.48	.97	....	.53	.50
60,000	.8900	.....	....	...	...	60,000	.7125	.....	....	...	...	....	...	...
.....	.8900	.8900	.048	.62	.04	.....	.7124	.7125	.059	.44	.94	.054	.53	.49
100,000	.....	.....	....	.69	.02	100,000	.....	.....	....	.42	.95	....	.56	.49

Compression measured in a length of 100 in.
Weight of columns, 182 lbs.
Maximum load, 188,500 lbs.

Maximum load per sq. in., sectional area = 1,995 lbs.
Ratio of stress to strain from 10,000 to 60,000 lbs. 982,540.
Manner of breaking, deflected downward, crushed at knot 18 in. from end.

Digitized by Google

TESTS OF WOODEN COLUMNS.

Specimen spruce: Dimensions—Width, 8¼ in.; depth, 8¼ in.; length, 9 ft. ¼ in. Date, April 26, 1894.

1	2	3	4	5	6	7	8	9
North Side.				South Side.				
Loads, pounds.	Micrometer readings.	Average reading.	Diff. between averages.	Loads, pounds.	Micrometer readings.	Average reading.	Diff. between average.	Mean of columns 4 and 10.
10,000	....	.4383	.....	10,000	.....	.6098	.....	....
60,000	....	.4395	.0488	60,000	.....	.6060	.0038	.0263

Compression measured in length of 50 inches.
Weight of column, 126 lbs.
Maximum load, 191,500 lbs.
Maximum load per sq. in., sectional area = 2.901 lbs.
Ratio of stress to strain from 10,000 to 60,000 lbs. = 1,439,900.
Manner of breaking, crushed 1 ft. from platform.

TESTS OF WOODEN COLUMNS.

Specimen spruce: Dimensions—Width, 8¼ in.; depth, 8¼ in.; length, 7 ft. 6 in. Date, April 26, 1894.

1	2	3	4	5	6	7	8	9
North Side.				South Side.				
Loads, pounds.	Micrometer readings.	Average reading.	Diff. between average.	Loads, pounds.	Micrometer readings.	Average reading.	Diff. between average.	Mean of columns 4 and 10.
10,000	... .	.8645	.....	10,000	.....	.8120	.....	.....
60,000	.....	.8515	.0130	60,000	.....	.7725	.0395	.0263

Compression measured in a length of 50 in.
Weight of column, 100 lbs.
Maximum load, 170,800 lbs.
Maximum load per sq. in. sectional area, 2.587 lbs.
Ratio of stress to strain, from 10,000 to 60,000 lbs. = 1,442,700.
Manner of breaking, crushed 6 in. from platform.

Digitized by Google

TESTS OF WOODEN COLUMNS.

Specimen spruce: Dimensions—Width, $8\frac{1}{8}$ in.; depth, $8\frac{1}{8}$ in.; length, 9ft. $6\frac{3}{8}$ in.
Date, April 26, 1894.

1	2	3	4	5	6	7	8	9
North Side.				South Side.				
Loads, pounds.	Micrometer readings.	Average reading.	Diff. between average.	Loads, pounds.	Micrometer readings.	Average reading.	Diff. between average.	Mean of columns 4 and 10.
10,000	.....	.6812	.....	10,000	.....	.6978	.....	.....
60,000	.....	.6609	.0203	60,000	.....	.6623	.0355	.0279

Compression measured in a length of 50 inches.
Weight of column, 133 lbs.
Maximum load, 175,700 lbs.
Maximum load per sq. in. sectional area = 2,662 lbs.
Ratio of stress to strain between 10,000 and 60,000 lbs. = 1,357,300.
Manner of breaking, crushed 3 ft. from platform.

TESTS OF WOODEN COLUMNS.

Specimen spruce: Dimensions—Width, $7\frac{3}{4}$ in.; depth, $7\frac{3}{4}$ in.; length, 5 ft. $8\frac{3}{8}$ in.
Date, April 26, 1894.

1	2	3	4	5	6	7	8	9
North Side.				South Side.				
Loads, pounds.	Micrometer readings.	Average reading.	Diff. between average.	Loads, pounds.	Micrometer readings.	Average reading.	Diff. between average.	Mean of columns 4 and 10.
10,000	.....	.6530	.....	10,000	.....	.7205	.....	.....
60,000	.....	.6232	.0298	60,000	.....	.6822	.0383	.0341

Compression measured in a length of 50 inches.
Weight of column, 66 lbs.
Maximum load, 191,900 lbs.
Maximum load per sq. in. sectional area = 3,195 lbs.
Ratio of stress to strain from 10,000 to 60,000 lbs. = 1,222,400.
Manner of breaking, crushed 1.5 ft. from platform.

Digitized by Google

TESTS OF WOODEN COLUMNS.

Specimen spruce: Dimensions—Width, 7⅞ in.; depth, 7⅞ in.; length, 5 ft. 9¾ in.
Date, April 26, 1894.

1	2	3	4	5	6	7	8	9
	North Side.				South Side.			
Loads, pounds.	Micrometer readings.	Average reading.	Diff. between average.	Loads, pounds.	Micrometer readings.	Average reading.	Diff. between average.	Mean of columns 4 and 10.
10,000	.....	.8392	.....	10,000	.....	.5482	.....	.....
60,000	.....	.7612	.0780	60,000	.....	.5280	.0202	.0491

Compression measured in a length of 50 in.
Weight of column, 66.5 lbs.
Maximum load, 156,000 lbs.
Maximum load per sq. in. sectional area, 2,556 lbs.
Ratio of stress to strain from 10,000 to 60,000 lbs. = 834,270.
Manner of breaking, crushed 1.5 ft. from platform.

TESTS OF WOODEN COLUMNS.

Specimen spruce: Dimensions—Width, 8¼ in.; depth, 8¼ in.; length, 7 ft. 11 in.
Date, April 26, 1894.

1	2	3	4	5	6	7	8	9
	North Side.				South Side.			
Loads, pounds.	Micrometer readings.	Average reading.	Diff. between average.	Loads, pounds.	Micrometer readings.	Average reading.	Diff. between average.	Mean of columns 4 and 10.
10,000	.....	.5405	.....	10,000	.....	.8615	.....	.....
60,000	.....	.5180	.0225	60,000	.....	.8170	.0645	.0435

Compression measured in a length of 50 in.
Weight of column, 104 lbs.
Maximum load, 175,400 lbs.
Maximum load per sq. in. sectional area, 2,617 lbs.
Ratio of stress to strain from 10,000 to 60,000 lbs. = 857,380.
Manner of breaking, crushed 1.5 ft. from platform.

Digitized by Google

DCX.*

THE APPLICATION OF BRAKES TO THE TRUCK WHEELS OF A LOCOMOTIVE.

BY GAETANO LANZA, BOSTON, MASS.
(Member of the Society.)

On the 9th and 16th of April, 1893, some experiments were made upon the effect of employing brakes upon the truck wheels of a locomotive, the results of which, it is believed, are of sufficient interest to be presented to the Society.

The trains drawn were composed of different numbers of cars, and were run at speeds corresponding, as nearly as possible, with those found in express-train service. The experiments were made by Messrs. Fred H. Keyes and John W. Logan, at that time students of the Massachusetts Institute of Technology, working under such supervision as was necessary to ensure the reliability of the results.

Through the courtesy of Mr. James N. Lauder, then Superintendent of the Old Colony Railroad, the experiments were made on the "third track" of the Providence division of that road, between Forest Hills and Hyde Park stations; the locomotive employed being No. 229, of the eight wheel, or American, type, the following being some of its principal dimensions:

Diameter of drivers	66 in.
Cylinders	18 in. × 24 in.
Weight on drivers	63,000 lbs.
Weight on truck	35,000 "
Total weight of engine	98,000 "
Weight of tender loaded	64,000 "

The cars used were fifty feet passenger cars, having an average weight of 43,000 pounds.

---

* Presented at the New York meeting (December, 1894) of the American Society of Mechanical Engineers, and forming part of Vol. XVI. of the *Transactions*.

Digitized by Google

The objects of the experiments were to determine (1) the distance in which the train could be stopped with the truck brakes applied, as compared with that in which it could be stopped when the truck brakes were not applied, every wheel in the train having brakes acting on it. (2) The distance in which the train could be stopped with all brakes applied, the throttle being closed, as compared with that in which it could be stopped when all brakes were applied and the throttle was left open.

The stops were all made with the train running south, the brakes being applied by the engineer, as nearly as possible, when the forward end of the engine was opposite a flag at the north end of Hazelwood station platform.

Stakes were driven alongside the track every fifty feet for two thousand feet beyond the flag.

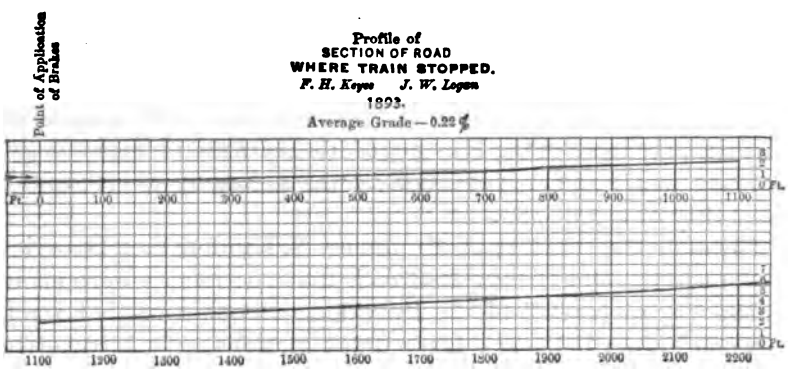

FIG. 15.

This part of the road is perfectly straight, and has an ascending grade of only 0.22 per cent., as shown in the accompanying profile (Fig. 15), determined within a week of the tests.

The observations taken were:

(1) Speed, just before the application of the brakes.

(2) Length of stop.

(3) Train pipe pressure, just before the application.

(4) Time of stop.

The speed was determined by averaging the results obtained from the readings of two revolution counters, one of which was connected with the cross-head, and hence gave the number of

Digitized by Google

revolutions of the drivers, while the other showed the number of revolutions of the truck wheels.

The length of the stop was obtained by observing the distance from the nearest stake to the forward truck wheel.

The train pipe pressure was determined by reading the gauge in the cab just before the application of the brakes.

The time from the application of the brakes till the train came to a full stop, was determined by an observer in the cab by means of a stop-watch.

The results are given in the following tables:

Number of Stop.	Speed per hour, Truck. Miles.	Speed per hour, Driver. Miles.	Average Speed per hour. Miles.	Train Pipe Pressure. Lbs. per sq. in.	Time of Stop. Seconds.	Length of Stop. Feet.	Number of Cars.	Truck Brake. In or out.	Remarks.
1	45.4	45.3	45.4	72	32.2	1287	None.	Out.	
2	42.8	42.9	42.8	71	32.8	1287	"	"	
3	.....	41.8	41.8	71	26.6	1068	"	In.	
4	44.8	45.3	45.0	71	31.4	1037	"	"	
5	.....	46.5	46.5	70	28.0	1057	"	"	
6	47.0	47.7	47.3	70	27.0	1075	"	"	
7	48.1	48.9	48.5	71	33.0	1458	"	"	
8	62.6	.....	62.6	70	36.6	1751	"	"	
9	58.9	59.7	59.3	70	36.0	1665	"	"	
10	59.9	59.7	59.8	70	44.8	2152	"	Out.	
11	57.2	56.1	56.6	70	41.6	1897	"	"	
12	51.3	50.1	50.7	71	29.2	1171	One.	"	
13	44.3	45.3	44.8	74	25.2	926	"	"	
14	45.9	46.5	46.2	71	23.0	853	"	In.	
15	43.2	43.0	43.1	72	20.6	793	"	"	
16	54.0	53.7	53.9	70	26.6	1128	"	"	
17	54.0	53.7	53.9	70	27.0	1200	"	"	
18	57.2	57.3	57.2	71	33.6	1542	"	Out.	
19	59.4	57.3	58.4	70	34.2	1600	"	"	
20	52.4	53.7	53.0	70	30.2	1375	Two.	"	
21	58.9	57.3	58.1	70	30.0	1468	"	"	
22	62.6	63.2	62.9	70	31.8	1518	"	"	
23	61.3	62.5	61.9	70	28.8	1321	"	In.	
24	60.5	62.0	61.2	71	28.2	1366	"	"	
25	61.6	63.2	62.4	70	28.0	1343	"	"	
26	44.3	46.5	45.4	71	21.2	853	"	"	
27	43.8	46.9	43.8	71	21.2	868	"	"	Drivers slipped.
28	45.9	46.5	46.2	71	23.4	890	"	Out.	
29	45.4	46.5	45.9	71	24.6	964	"	"	
30	50.8	50.1	50.4	71	24.0	918	"	"	
31	64.8	64.4	64.6	71	27.8	1314	Three.	"	
32	57.2	58.5	57.8	71	27.2	1242	"	"	
33	58.9	59.7	59.3	71	25.2	1147	"	In.	
34	59.4	58.5	58.9	70	24.4	1159	"	"	
35	42.1	43.0	42.5	70	20.2	748	"	"	
36	53.5	52.5	53.0	70	19.8	803	"	"	
37	48.6	48.9	48.7	70	21.4	834	"	Out.	
38	47.0	47.7	47.3	70	20.0	808	"	"	
39	.....	.....	.....	70	25.5	873	"	"	
40	48.1	48.9	48.5	71	29.0	1170	"	"	This test was thrown out.
41	47.0	47.7	47.3	70	29.5	1146	Four.	In.	Throttle open.
42	43.2	43.0	43.1	70	26.5	944	"	"	" "
43	45.4	45.3	45.4	70	24.5	843	"	"	
44	47.0	46.5	46.8	71	22.0	860	"	"	

Digitized by Google

Number of Stop.	Speed per hour, Truck. Miles.	Speed per hour, Driver. Miles.	Average Speed per hour. Miles.	Train Pipe Pressure. Lbs. per sq. in.	Time of Stop. Seconds.	Length of Stop. Feet.	Number of Cars.	Truck Brake. In or out.	Remarks.
45	47.5	46.5	47.0	71	24.0	900	Four.	Out.	
46	47.0	47.7	47.3	70	24.5	978	"	"	
47	54.0	56.1	55.0	70	30.0	1339	"	"	
48	56.8	58.5	58.4	70	29.0	1414	"	"	
49	57.2	57.3	57.2	70	28.0	1322	"	In.	
50	58.9	58.5	58.7	70	28.5	1390	"	"	
51	60.5	59.7	60.1	70	35.5	1685	"	"	Throttle open.
52	48.6	50.1	49.3	70	20.5	846	Five.	"	
53	44.3	44.2	44.3	70	20.0	744	"	Out.	
54	49.1	48.9	49.0	70	21.0	837	"	"	
55	51.3	51.3	51.3	70	25.0	1017	Six.	"	
56	46.4	47.7	47.0	71	22.0	884	"	"	
57	48.1	47.7	47.9	71	21.0	823	"	In.	
58	46.4	46.5	46.4	72	.....	769	"	"	
59	55.1	54.9	55.0	69	24.0	1006	"	"	
60	51.3	46.5	.....	70	24.5	1033	"	"	
61	53.5	53.7	53.6	70	24.0	1000	"	"	
62	52.9	53.7	53.3	70	24.0	991	"	Out.	
63	54.5	53.7	54.1	70	25.0	1013	"	"	
64	48.1	47.7	47.9	70	23.0	906	"	In.	Throttle open.
65	48.6	47.7	48.1	71	23.5	917	"	"	" "

In the following comparative table a selection has been made of tests in which the speed was quite near sixty or forty-five miles per hour, and the equivalent length of stop with a train pressure of seventy pounds, and the two above-stated speeds, respectively, were calculated in each case by means of the formula

$$S_r = S_1 \frac{P_1 V^2}{70 V_1^2}$$

where

S_r = length, in feet, of equivalent stop, from speed V with a train pipe pressure of 70 pounds per square inch.

S_1 = length, in feet, of actual stop.

P_1 = actual train pipe pressure in pounds per square inch.

V = speed, in miles per hour, at which the equivalent stop is desired (60 or 45 miles).

V_1 = actual speed in miles per hour.

This formula, although it is only approximate, cannot be far from correct, when the actual speeds and train pipe pressures do not differ greatly from those corresponding to which the equivalent length of stop is desired.

Whether the selection of individual tests to be used in the following comparative table has been wisely chosen or not, the reader can determine for himself, since he has all the necessary data in the preceding general table.

Digitized by Google

Number of Stop.	Speed per hour. Miles.	Number of Cars.	Truck Brake. In or out.	Length of Reduced Stop. Feet.	Average Length. Feet.	Gain in Feet.	Gain in Per-cent.
8.....	60	None.	In.	1609			
9.....	60	"	"	1705	1657		
10.....	60	"	Out.	2166			
11.....	60	"	"	2132	2149	492	23
4.....	45	"	In.	1052			
5.....	45	"	"	990			
6.....	45	"	"	978	1005		
1.....	45	"	Out.	1301			
2.....	45	"	"	1282	1292	287	22
16.....	60	One.	In	1398			
17.....	60	"	"	1487	1443		
18.....	60	"	Out.	1721			
19.....	60	"	"	1689	1705	262	15
14.....	45	"	In.	821			
15.....	45	"	"	889	855		
12.....	45	"	Out.	936			
13.....	45	"	"	988	962	107	11
25.....	60	Two.	In.	1242	1242		
22.....	60	"	Out.	1381	1381	139	10
26.....	45	"	In.	850	850		
29.....	45	"	Out.	940	940	90	10
34.....	60	Three.	In.	1208	1208		
32.....	60	"	Out.	1814	1814	111	8
49.....	60	Four.	In.	1411			
50.....	60	"	"	1453	1432		
47.....	60	"	Out.	1593			
48.....	60	"	"	1498	1543	111	7
43.....	45	"	In.	828			
44.....	45	"	"	808	818		
45.....	45	"	Out.	836			
46.....	45	"	"	885	861	43	5
52.....	45	Five.	In.	705	705		
53.....	45	"	Out.	768			
54.....	45	"	"	706	737	32	4
59	60	Six.	In.	1180			
61.....	60	"	"	1253	1217		
62.....	60	"	Out.	1256			
63.....	60	"	"	1246	1251	34	3
57.....	45	"	In.	737			
58	45	"	"	744	741		
55	45	"	Out.	783			
56.....	45	"	"	776	780	39	5

This comparative table speaks so plainly for itself that it seems unnecessary to comment upon it at any length. That the percentage gain, as well as the gain in feet, should be greater with short than with long trains, was naturally to be expected; and both the general and the comparative tables furnish information as to the amount of the gain.

Digitized by Google

The following table exhibits the difference in the length of stop with and without the throttle valve closed.

Number of Stop.	Speed per hour. Miles.	Number of Cars.	Truck Brake. In or out.	Length of Reduced Stop with Steam.	Average Length with Steam.	Length of Stops, Similar Conditions. Without Steam.	Difference.
41.....	45	Four.	In.	1037			
42.....	45	"	"	1029	1033	818	215
51.....	60	"	"	1679	1679	1432	247
64.....	45	Six.	"	851			
65.....	45	"	"	800	826	741	85

Digitized by Google

DCXI.*

STRAIGHTENING A LEANING CHIMNEY 100 FEET HIGH.

BY JOSEPH C. PLATT, WATERFORD, N. Y.

(Member of the Society.)

It will perhaps be interesting to those having similar property, or to any who may have similar work to do, to know how a brick chimney 100 feet high, which leaned about 28 inches, was made plumb. This chimney is that of the Ormsby Textile Company, of Waterford, N. Y.

It was erected in 1893. Soon after its completion it was found to be considerably out of plumb; and when first measured, in November, was found to lean about 16 inches, and a few days later 22 inches. Then the rate of increase of inclination became less, but in March, 1894, it was $28\frac{1}{8}$ inches out of line, and it was decided to attempt to straighten it. The factory to which the chimney is attached stands on the north side of the north outlet of the Mohawk River, and distant perhaps one-third of a mile from the west bank of the Hudson. The underlying rock in this part of the country is the Hudson River shale. Where this rock comes to the surface it is very irregular in shape, and is probably equally so where it has been covered by the earth deposit. In the vicinity of this mill no rock comes to the surface over a section about three-quarters of a mile long and one-quarter wide. The earth deposit throughout this tract is apparently quite uniform in quality, yet a great variation in it is possible. Since it is probably all a river deposit, one spot may be good earth or sand or gravel while another may be largely vegetable matter and much softer.

In giving an account of this work I only act as a recorder of

* Presented at the New York meeting (December, 1894) of the American Society of Mechanical Engineers, and forming part of Vol. XVI. of the *Transactions*.

Digitized by Google

facts which were given to me by Mr. C. C. Ormsby. I was not at home when most of the work was under way, though I witnessed a portion of it.

The chimney proper is rectangular in plan, is built of brick, is 9 feet 6 inches square at the bottom and 5 feet 4 inches square at the top; it is 100 feet high and has a central flue 3 feet square. The estimated weight of this is 206 tons. It stands upon a foundation which is 14 feet deep, the lower 4 feet being of concrete about 14 feet square, on which rests heavy stonework 10 feet high, 14 feet square at the bottom and 9 feet 6 inches square at the top. The weight of the foundation is about 149 tons, making a total of 355 tons resting on 196 square feet, about 1.8 tons per square foot.

Before commencing the work, soundings were made on all sides of the proposed site. These varied from 20 to 38 feet in depth below the natural surface of the ground, and indicated the same character of soil as its surface, a soft alluvial deposit with streaks of sand, but with no hard material or rock or bowlders. The chimney was built upon this soil without the use of any piles. Two similar chimneys had been built in the immediate vicinity on what appeared to be similar material, and no trouble had been experienced with these. The bottom of the concrete is about two feet above normal summer level of the Mohawk River, but at the time of sounding in March it was submerged about four feet, it being found that the water rises and falls in the soil in the vicinity with the rise and fall of the river.

The work of straightening the chimney commenced on the 19th day of March, 1894. A scaffold was erected about the chimney, and eight oak timbers six inches by ten inches by ten feet were placed vertically at the corners at a height of 42 feet above the stonework and four and one-half feet below the centre of gravity of the brickwork; the object of the oak timbers being to spread the bearing of the wire ropes over as large a section as practicable. (Figs. 16 and 17.)

Wire ropes were passed around the timbers, and another wire rope two and one-half inches in diameter, with an eye in each end, was fastened to the first-mentioned ropes at its upper eye. The lower eye was connected with a system of pulleys secured to the dock at the river edge at a point 78 feet distant and directly opposite the direction in which the chimney leaned, the pulleys being made up of three sets of double and single blocks

Digitized by Google

FIG. 16.

Digitized by Google

connected together in series, having three points of fastening to the dock and having eleven pulleys in the system. Cables were also put out from the chimney on each side at right angles to the main cable, and having turn buckles to tighten them; also a guard cable in rear.

The earth was then excavated on the high side of the foundation nearly half way around to the bottom of the foundation (a depth of thirteen feet) and the main cable put under strain with the pulleys. By this means, in the course of three weeks, the chimney was brought back about four inches. Then, with a post-hole digger, eight inches in diameter, eleven holes were sunk vertically in the bottom of the trench around the foundation, principally at the highest point, to a depth of five and one-half to six feet. At this time the water in the river stood up to within one and one-half feet of the bottom of the foundation, the ground being soft to a depth of four feet; it then became very hard, showing that the strata supporting the chimney had been reached. No movement or flow of the soil was discovered until the eighth hole was sunk four and one-half feet and the tool withdrawn for clearance, when it could only be reinserted readily about three feet and headway made very slowly.

From this removal of the earth there resulted, within a few hours, a righting of the chimney to the extent of five inches. This increased to eight inches by the next morning. The slack of the pulling rope was taken up as fast as the chimney moved, and the rope was kept under strain. By tightening up the pulley rope two or three times daily, in a week the chimney was brought back to eight and three-quarter inches.

At this point, in similar manner, the post-hole diggers being reduced to six inches in diameter, about one-fifth as much more material was removed, immediately followed by righting the chimney to four inches, and from that point, after filling the holes with fine broken stone and gravel thoroughly rammed, by continued daily strain on the main cable, the chimney was brought back to plumb at the rate of a quarter of an inch per day. The turn buckles in the side cables were occasionally used to control any tendency toward lateral inclination.

The work has been accomplished without injury to the structure. Time alone can tell for how long it will retain its position, or whether the rising and falling of the river will affect it. It is stated that some chimneys at Louisville, Ky., which

Digitized by Google

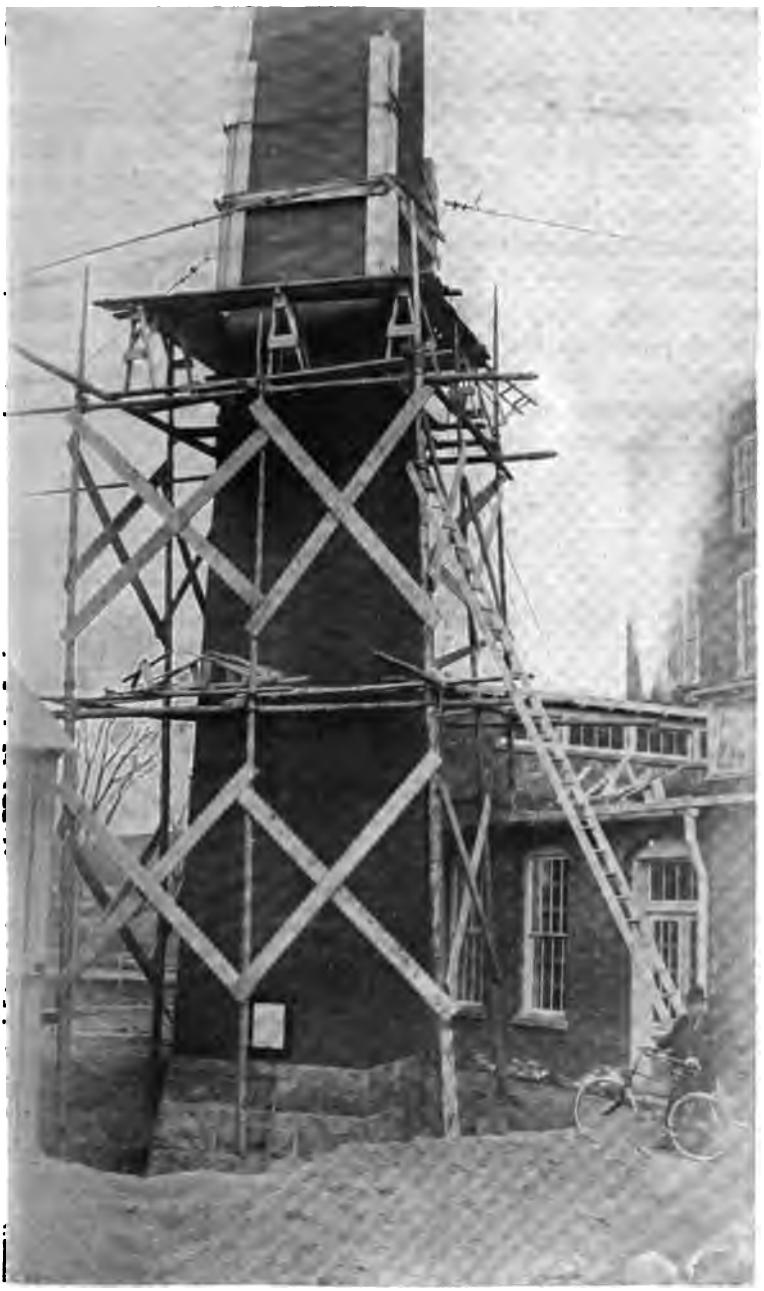

FIG. 17.

Digitized by Google

were straightened in a similar manner, have remained in proper position.

This chimney settled in all .598 of a foot.

The work was done under the direction of the owners, by a local contractor, following methods proposed by A. T. Sabin, C. E., of the C. O. & S. W. RR. Co., who had knowledge of how similar work had been done near Louisville. Below is given the record of observations of the movement of the chimney from the first discovery of its extensive settlement until brought back plumb. The figures under AB represent the distance out of plumb at the bottom of the brickwork in a direction parallel with two sides of the base. Those under BC give the distance out of plumb on a line at right angles to the first through the centre of the chimney.

MEASUREMENTS.

Date, 1893.	AB	BC	
Nov. 6	16	.....	
Nov. 8, 8 A. M.	20	.....	
Nov. 8, 2 P M	22	4	
Nov. 9	22.5	4.25	
Dec 5	24.25	5.5	
1894.			
Jan. 5	26	6.5	
Feb. 1	27.875	6.875	
Feb. 27	27.875	6.9375	
Mar. 17	28.125	6.75	Excavation commenced.
Mar. 23	27.25	6.75	
April 5	24.875	6.375	
April 9	24.5	5.8125	
April 10, 10 A. M.	22.3125	5.75	Nine holes bored.
April 10, 1 P. M.	19.375	5.4375	
April 19	16.125	4.75	Two holes bored.
April 20	13.6775	4	
April 21	11.75	.....	
April 22	10.25	2.625	
April 23	9.875	2.4375	
April 24	9.1875	2.4375	
April 25, 7 A. M.	8.75	2	Bored second set of holes.
April 25, 11.30 A. M.	5.625	.875	
April 25, 1 P. M.	4.4375	.875	
April 25, 1.40 P. M	4.625	.375	
April 26	2.625	.25	
April 27	2.125	.25	
April 28	1.4375	.0625	
April 29	1.125	.0625	
April 30	.875	.....	
May 1	.625	.125	
May 2	.5	.....	
May 3	.125	.1875	
May 4	.0625	.0625	

Digitized by Google

In September, 1894, the chimney leaned nearly two inches towards the river, and away from the mill. This inclination has come since the trench was filled, and is, perhaps, the result of the weight of the material with which the excavation on the high side of the foundation was refilled. This excavation was so large and deep that the material used to fill it probably weighed eighty tons.

Digitized by Google

DCXII.*

TESTS ON THE TRIPLE ENGINE AT THE MASSACHUSETTS INSTITUTE OF TECHNOLOGY.

BY C. H. PEABODY AND E. F. MILLER, BOSTON, MASS.

(Members of the Society.)

AT the meeting of this Society, in 1892, we presented data and results of tests made on the triple engine in the laboratory of steam engineering at the Massachusetts Institute of Technology.† We are now able to give further results, which, we believe, lead to definite conclusions concerning the behavior of our engine. Our former paper gave, at length, the manner of making tests and calculating results in vogue at our laboratory, and the precautions employed to avoid errors of observation or calculation. It is not necessary to describe the engine at length, but the main dimensions will be given for convenience:

High-pressure Cylinder.

Diameter	8.99 ins.
Stroke	30.00 ins.
Diameter piston-rod	2.19 ins.
Clearance in per cent. of piston displacement	C. E., 9.76. H. E., 8.88.
Piston displacement	C. E., 1.037 cu. H. E., 1.102 cu. ft.

Intermediate Cylinder.

Diameter	16.01 ins.
Stroke	30.00 ins.
Diameter piston-rod	2.19 ins.
Clearance in per cent. of piston displacement	C. E., 10.9. H. E., 10.4.
Piston displacement	C. E., 3.430 cu. ft. H. E., 3.495 cu. ft.

* Presented at the New York meeting (December, 1894) of the American Society of Mechanical Engineers, and forming part of Vol. XVI. of the *Transactions.*

† *Transactions of the American Society of Mechanical Engineers,* Vol. XIV., p. 381, No. 521.

Digitized by Google

Low-pressure Cylinder.

Diameter	20.063 ins.
Stroke	30.00 ins.
Diameter piston-rod	2.16 ins.
Clearance in per cent. of piston displacement	C. E., 12.27. H. E., 12.18.
Piston displacement	C. E., 7.831 cu. ft. H. E., 7.894 cu. ft.

Our paper, printed in 1892, showed conclusively that the best results were obtained when steam was admitted to the jackets

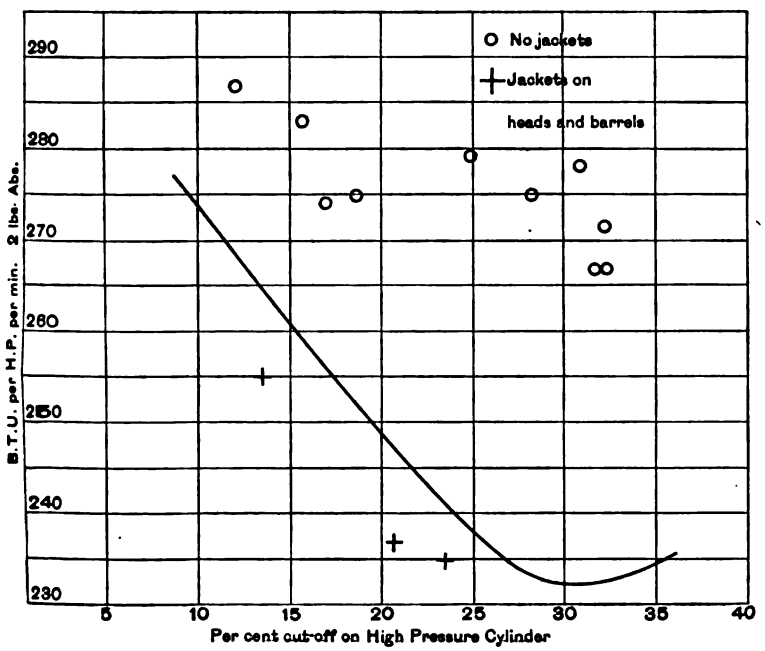

FIG. 18.

on the cylinders of the engine, but not to jackets on the intermediate receivers.

This, in our opinion, does not show that intermediate reheaters are bad, but that they appear to be superfluous for our engine. The curve representing the series of tests made under these conditions, with the per cent. of cut-off on the high-pressure cylinder for abscissæ, and with B. T. U. per horse-power per minute for ordinates, appeared to be so well located and so characteristic that it was chosen as a sort of standard for refer-

Digitized by Google

ence, and drawn on all of our diagrams; it has been repeated on our diagrams representing the present tests.

These tests are divided into three series in the table appended to the paper:

Tests 1 to 8 had steam in the jackets on the heads of the three cylinders only.

Tests 9 to 18 had no steam in any jacket.

Tests 19 to 21 had steam in the jackets on the heads and barrels of the three cylinders.

Steam was not admitted to the jackets or intermediate reheaters on the intermediate receivers, in any of the tests.

The first two series are naturally the most interesting; the third series of three tests was made to establish a comparison between the present condition of the engine and the condition in 1892. In the interim the cases of certain large valves and the heads of the receivers have been covered with non-conducting material, with a definite though small gain in efficiency, as is shown by the diagram (Fig. 18). The plain curve shows the heat consumption before the change, and the three crosses show as many tests after that change. In 1892 the engine used 240 B. T. U. per horse-power per minute, with the cut-off at 25 per cent. on the high-pressure cylinder; in 1894, with the cut-off at 23.6 per cent., the consumption was 235 B. T. U.; the gain from the additional non-conducting covering was apparently

$$\frac{240-235}{240} \times 100 = 2 \text{ per cent.}$$

A comparison of the tests 19, 20, and 21 of 1894 with the tests of 1892 shows that the steam in the cylinders at cut-off and release was dryer after the additional non-conducting material was applied; this, of course, confirms the result of the comparisons of the heat consumptions, and both results are what might have been anticipated.

It is, however, a fact that the unavoidable error of the determination of the indicated horse-power of an engine amounts to a large part of the quantity under discussion. We recognize also the hazard of applying the conclusions from two or three tests to conditions different from those of the tests, even though those conditions are not very dissimilar. We have concluded to base all of our comparisons of the relative economy of running our engine with and without steam in the jackets, on the tests

Digitized by Google

made on the engine in 1892, without modification. Any one may allow 1 or 2 per cent. for the improved condition of the engine, if he desires to.

The series of tests numbered 1 to 8, with steam in the jackets on the heads of the cylinders, are represented in Fig. 19. The curve is well determined, and shows a minimum heat consumption of 262 B. T. U. per horse-power per minute, with the cut-off at 30 per cent. on the high-pressure cylinder. Assuming the consumption to be 233 B. T. U. per horse-power per minute,

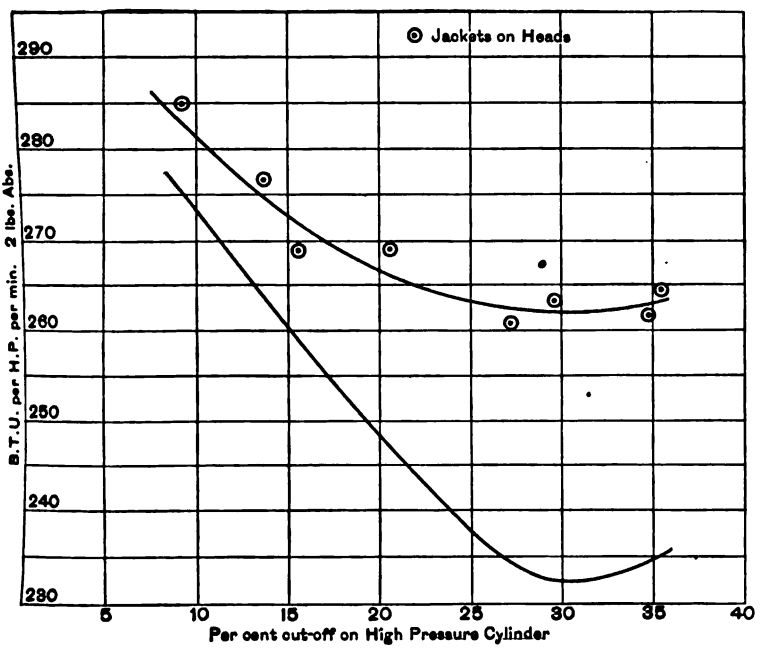

FIG. 19.

at the minimum, with steam in the jackets on the barrels and heads, the ratio of the consumption is

$$233 : 262 :: 1 : 1.12.$$

Most unexpectedly we have found a great deal of difficulty in getting concordant results from tests made on our engine with no steam in the jackets. After having started a leak at one of the cylinder liners by starting the engine without steam in the jackets, we have fallen into the habit of blowing steam through

Digitized by Google

the jackets before starting. Now, the steam in the jackets brings the engine up to its maximum temperature promptly, and the engine test may be begun in fifteen minutes or half an hour after the engine has started; the condition of the steam in the cylinder during a test under such treatment varies but little. On the other hand, after the engine is well heated up by the jackets, the stored heat has an influence on the condition of the steam in the cylinders for an hour or more after the jackets have been shut off; this is shown by the fact that the steam in the cylinders gradually becomes more moist and the steam consumption gradually increases. As our laboratory is kept very busy with a variety of work, we find it often inconvenient or impossible to run the engine at full load and under the conditions of the test, for an hour or two before the test begins; and many of our tests without steam in the jackets show the influence of stored heat even though we allow all the time we can. The full effect of this difficulty was realized only after the work for the year was substantially finished, and as we shall probably have the difficulty always with us, we have concluded to report our tests for what they are worth. It is to be remarked that the scattered effect of points on Fig. 18, representing tests without steam in the jackets, is largely due to the exaggerated vertical scale, and that the discrepancies are not so great as they appear. Thus, with the cut-off on the high-pressure cylinder at about 31 per cent., we have the heat consumption varying from 267 to 278 B. T. U. per horse-power per minute; that is in the ratio

$$267 : 278 :: 1.04,$$

and the variation of either extreme from the mean is not more than 2 per cent.

If we assume the minimum heat consumption without jackets to occur with the cut-off on the high-pressure cylinder at 30 per cent., and to be 270 B. T. U. per horse-power per minute, we may make provisional comparisons with the consumptions with steam in the jackets on the heads, or with steam in the jackets on heads and barrels.

The ratio of the heat consumptions with steam in all the jackets and without steam in the jackets is

$$233 : 270 :: 1 : 1.16.$$

Digitized by Google

The ratio of the heat consumptions with steam in the jackets on the heads and without steam in the jackets is

$$262 : 270 :: 1 : 1.03.$$

It is our opinion that the heat consumption of this engine is really larger than 270 B. T. U. per horse-power per minute, and that the gain from the use of steam in the jackets is larger than is shown by the preceding ratios, to the extent of 1 or 2 per cent.

Two remarkable and to us unexpected conclusions appear to come from our tests on jacketing: (1) that there is comparatively little effect from jacketing the heads of the cylinders of our engine; (2) that the gain from jacketing is less for very short cut-off than for a cut-off at 30 per cent. on the high-pressure cylinder, at which our engine finds its minimum consumption.

Digitized by Google

PRIMING 1 PER CENT. FOR ALL TESTS.

Number.	Date.	Horse-power.	Steam per H.P. per hour.	Steam through the cylinders.	Water by Jackets per Hour.					Revolutions per minute.	Boiler pressure (gauge).	Vacuum in condenser (inches of mercury).	Barometer.	High-Pressure Cylinder.									
					High-pressure cylinder.	First receiver.	Intermediate-pressure cylinder.	Second receiver.	Low-pressure cylinder.					Initial pressure.	Per cent. of cut-off.	Pressure at cut-off.	Pressure at release.	Pressure at compression.	Per cent. of steam in cylinder at cut-off.	Per cent. of steam in cylinder at release.	M. E. P. crank.	M. E. P. head.	Horse-power.
1	2	3	4	5	6	7	8	9	10	11	12	13	14	15	16	17	18	19	20	21	22	23	24
1	March 15	55.97	16.58	777.5	22.7	....	59.6	....	68.1	84.95	145.8	25.6	30.0	142.6	9.1	129.6	13.5	18.4	.668	.889	32.18	34.43	26.44
2	April 5	69.45	15.53	915.0	19.5	....	65.8	....	78.4	84.03	144.5	26.4	29.9	144.5	18.9	130.5	17.5	22.5	.743	.857	38.40	40.29	30.88
3	March 16	72.87	15.55	960.0	21.2	....	66.0	..	77.2	83.35	141.9	25.6	29.8	142.4	15.6	128.5	25.2	30.1	.778	.964	37.88	41.22	30.80
4	March 20	84.22	15.06	1101.0	15.7	....	72.0	....	88.8	82.40	145.3	26.7	30.3	143.1	20.7	136.3	28.8	35.2	.801	.912	43.03	45.09	33.87
5	March 23	97.46	15.20	1293.0	17.8	....	99.7	....	71.8	81.40	144.2	24.7	29.7	140.2	27.8	137.3	37.3	46.8	.898	.906	42.81	47.72	34.44
6	March 26	101.57	15.01	1343.5	18.2	....	71.6	....	91.8	81.05	143.4	25.4	29.9	140.7	29.7	138.7	40.0	50.2	.859	.923	44.36	47.85	34.92
7	March 27	109.46	15.02	1461.0	17.8	....	72.5	....	92.7	80.28	143.1	25.5	30.2	141.5	34.9	136.6	48.1	57.7	.866	.943	45.20	47.06	34.59
8	March 30	114.12	15.19	1532.0	16.4	....	70.8	....	113.7	80.32	144.0	25.0	29.9	143.9	35.6	138.8	48.7	58.3	.858	.912	49.18	49.46	36.97
9	April 16	56.35	15.94	898.5	.....	....	.....	....	.....	84.38	145.0	25.8	30.1	142.8	11.9	129.1	15.6	16.5	.701	.846	36.96	39.15	30.01
10	April 27	63.86	15.56	993.5	.....	....	.....	....	.....	83.37	145.5	26.0	30.0	144.8	15.7	136.5	21.9	26.1	.762	.882	39.69	42.07	31.84
11	April 23	66.25	15.41	1021.0	.....	....	.....	....	.....	83.53	145.0	25.6	30.0	142.8	16.8	131.5	21.4	22.9	.753	.852	41.00	44.28	33.22
12	April 24	72.79	15.04	1094.5	.....	....	.....	....	.....	83.03	145.8	26.1	30.0	145.6	18.6	133.0	21.9	25.2	.765	.812	45.52	49.59	36.90
13	March 9	80.91	15.32	1239.5	.....	....	.....	....	.....	82.18	144.5	26.0	30.2	143.7	24.8	134.5	34.2	39.8	.805	.912	43.04	47.65	34.83
14	May 1	86.91	15.16	1317.5	.....	....	.....	....	.....	81.52	145.1	26.1	30.0	143.2	28.1	137.1	36.7	44.1	.838	.830	47.06	49.85	36.89
15	April 30	90.33	15.42	1393.0	.....	....	.....	....	.....	81.12	145.5	26.0	30.2	142.4	30.8	139.0	42.1	49.2	.853	.918	46.87	50.55	36.92
16	February 23	96.78	14.83	1435.5	.....	....	.....	....	.....	81.03	146.1	26.2	30.1	143.8	31.6	138.4	41.8	47.2	.833	.886	48.01	51.12	37.54
17	April 17	98.53	15.15	1417.0	.....	....	.....	....	.....	80.98	145.4	25.8	30.3	142.9	32.2	136.8	42.6	49.8	.856	.910	46.71	48.79	36.06
18	February 27	96.37	14.97	962.0	.....	....	.....	....	.....	80.83	144.6	25.4	30.4	142.4	33.3	135.7	43.4	47.8	.834	.903	48.60	52.11	38.08
19	April 20	77.82	14.69	868.0	45 9	.. .	123.7	....	105.4	84.23	145.2	26.1	30.0	142.7	13.5	133.5	19.0	26.5	.770	.922	35.80	37.60	28.87
20	April 13	101.91	13.49	1092.0	49.5	....	125.6	....	108.3	82.50	141.5	26.2	29.9	144.1	20.5	135.6	28.2	35.8	.801	.908	41.97	45.20	33.59
21	April 6	104.20	13.27	1118.0	34.4	....	120.4	....	109.8	82.13	145.3	26.4	30.0	143.3	23.6	137.1	33.4	42.4	.855	.969	41.13	46.54	34.00

Digitized by Google

PRIMING 1 PER CENT. FOR ALL TESTS.

Number.	Date.	Intermediate-Pressure Cylinder.										Low-Pressure Cylinder.														Represented in Plates I. and II. by
		25	26	27	28	29	30	31	32	33	34	35	36	37	38	39	40	41	42	43	44	45	46	
		Initial pressure.	Per cent. of cut-off.	Pressure at cut-off.	Pressure at release.	Pressure at compression.	Per cent. of steam in cylinder at cut-off.	Per cent. of steam in cylinder at release.	M. E. P. crank.	M. E. P. head.	Horse-power.	Initial pressure.	Per cent. of cut-off.	Pressure at cut-off.	Pressure at release.	Pressure at compression.	Per cent. of steam in cylinder at cut-off.	Per cent. of steam in cylinder at release.	M. E. P. crank.	M. E. P. head.	Horse-power.	B. T. U. per H.P. per minute (actual).	B. T. U. per H.P. per minute reduced to 2 lbs. absolute.	
1	March 15	13.4	15.0	10.9	7.1	−5.5	.598	.843	6.06	5.18	14.41	−6.7	87.5	−8.8	−11.6	−12.0	.745	.792	2.45	2.74	15.12	290	285	⊙
2	April 5	17.3	20.5	11.4	7.2	−8.3	.652	.890	7.83	6.59	17.72	−6.1	82.5	−6.7	−11.3	−11.7	.704	.797	3.60	3.69	20.85	273	277	
3	March 16	23.9	15.6	19.2	14.8	−8.8	.699	.899	7.87	7.56	19.41	−8.7	30.0	−5.9	−11.1	−11.9	.709	.792	3.94	3.98	22.65	278	269	
4	March 20	29.4	17.9	23.4	18.9	−0.6	.674	.864	10.06	9.33	24.18	−2.6	24.7	−5.2	−11.0	−12.5	.661	.717	4.72	4.96	27.87	288	269	
5	March 23	26.8	19.1	20.1	15.3	−8.1	.653	.902	12.09	10.72	28.07	−1.1	26.5	−1.4	−9.5	−11.4	.700	.764	6.02	6.40	34.60	267	261	
6	March 26	41.4	17.8	34.4	31.0	4.3	.679	.906	12.96	11.77	30.30	2.2	26.0	−1.3	−10.4	−12.0	.677	.831	6.37	6.70	36.35	265	263	
7	March 27	49.2	17.8	41.1	37.8	8.4	.701	.893	14.87	14.59	35.73	2.6	27.0	−0.4	−9.6	−11.8	.700	.700	7.04	7.17	39.14	265	263	
8	March 30	48.2	18.0	40.7	37.5	4.9	.696	.871	15.69	14.89	37.02	2.9	28.3	−0.4	−9.5	−11.4	.668	.696	7.07	7.40	40.13	267	264	
9	April 16	12.3	14.8	8.2	7.4	−6.8	.487	.720	6.32	5.04	14.46	−7.9	31.6	−9.2	−11.8	−11.9	.514	.788	2.00	2.10	11.87	289	287	⊙
10	April 27	19.7	11.0	14.5	6.6	−6.8	.475	.721	9.01	7.44	19.40	−8.4	40.0	−9.2	−11.5	−12.1	.510	.615	2.80	2.19	12.56	283	288	
11	April 23	19.7	14.7	14.4	6.9	−5.2	.518	.749	7.52	6.76	18.01	−6.5	30.0	−7.7	−11.2	−11.4	.545	.741	3.03	2.57	14.96	270	274	
12	April 24	24.0	13.8	19.1	12.6	−4.1	.538	.694	8.44	7.70	20.36	−6.6	30.8	−6.0	−11.4	−11.9	.494	.680	3.73	2.79	15.53	275	274	
13	March 9	34.0	13.8	29.0	26.1	−1.4	.568	.806	10.36	8.59	23.58	−2.6	22.5	−4.9	−11.0	−12.0	.510	.615	3.96	4.02	22.50	279	279	
14	May 1	37.4	12.0	33.0	30.3	−1.3	.568	.711	12.09	10.44	27.73	−3.3	26.5	−5.5	−11.4	−11.9	.499	.681	3.87	4.10	22.20	275	275	
15	April 30	40.9	13.0	34.7	32.0	−0.8	.579	.732	13.43	11.84	30.02	−2.9	25.5	−5.5	−10.8	−11.8	.498	.698	4.02	4.06	23.49	276	278	
16	February 23	42.7	15.5	35.0	32.7	−1.5	.617	.819	14.14	12.95	33.02	−1.8	28.8	−4.4	−10.7	−11.7	.534	.670	4.61	4.82	26.22	267	272	
17	April 17	44.2	12.5	39.1	37.2	2.2	.601	.780	14.49	12.93	33.80	−2.2	25.3	−4.6	−10.9	−11.7	.499	.615	4.38	4.50	24.67	274	272	
18	February 27	41.8	16.5	31.5	31.8	0.6	.597	.740	13.53	12.17	33.00	−1.7	24.5	−5.9	−10.5	−11.7	.503	.604	4.59	4.69	25.74	270	267	
19	April 30	20.5	22.3	16.3	4.3	−3.2	.810	.974	7.95	8.16	20.50	−3.3	38.8	−5.8	−11.0	−11.2	.965	.986	4.78	5.06	28.44	253	255	+
20	April 13	29.4	21.8	23.3	11.5	0.8	.890	.969	11.46	11.26	28.80	−0.5	39.8	−8.1	−9.8	−12.4	Sup.	.960	6.04	7.20	40.02	245	247	
21	April 6	35.0	20.0	28.7	−6.3	2.7	.796	.978	11.32	11.34	28.04	0.0	36.8	−2.5	−10.0	−12.4	.975	.847	7.31	7.56	41.91	232	235	

Digitized by Google

DISCUSSION.

Prof. D. S. Jacobus.—These tests of Professor Peabody appear to be very carefully made, and the general result agrees with those which have been obtained by Professor Reynolds, of Manchester, and on the engine of Professor Alden at Worcester, which is that in small engines the gain due to jacketing may be considerable. It is not logical, however, to apply the same reasoning to larger commercial engines, because for greater dimensions of cylinders the ratio of the surface to the cylinder volume is different, and we know that we get different results. Even in an engine tested in the way these were, it is difficult to apply the results to larger engines. For example, these tests are compared at equal cut-offs. But you will notice in the table that for equal cut-offs the horse-power generated for a given cut-off without the jacket is much less than the horse-power generated for the same cut-off when the jacket is in use. For example, at 24 per cent. cut-off we find 86 horse-power without jacket, and over 100 when jackets are in use. To make the comparison exactly, you would have to preserve the cut-off at .24 and have the horse-power the same, and to do that we would have to make the engine without the jacket larger than the engine with the jacket, but then we get a different law of cylinder condensation. This is well shown by Dr. Emery in his exhaustive tests at the Novelty Works, which prove that the cylinder condensation for large cylinders is much less than for small ones. So that, if we alter our dimensions for our engines in order to preserve the same cut-off and horse-power, we would diminish the difference shown by Professor Peabody in favor of jackets. We cannot, therefore, predict results for large commercial engines from the results obtained by tests of these small engines. If we want to predict the result for any engine, we should compare it with a test of some engine which is similar in its size to the engine of which we seek to ascertain the economy.

*Prof. C. H. Peabody.**—We agree with Professor Jacobus that extreme caution is required in trying to infer the effect of any device applied to a large engine from the results of tests made on a small engine, but we cannot admit that an engine with a cylinder 24 inches in diameter and 30 inches stroke is a small engine. We are of the opinion that any device which shows an amelioration

* Author's closure, under the Rules.

Digitized by Google

of the bad effects of initial condensation on such an engine will have a like effect, though in a somewhat less degree, on an engine which differs from it only in being several times as large.

We fail to see the force of the last remarks of Professor Jacobus. The engine shows its best economy at about 30 per cent. cut-off for the high-pressure cylinder with or without steam in the jackets. The curve of thermal units per horse-power per minute with steam in the jackets is well determined, as will be seen by referring to our previous paper,* and it shows that the heat consumption is increased about two per cent. by shortening the cut-off to twenty-five per cent. on the high-pressure cylinder. On the other hand, the distribution of the points showing the heat consumption without steam in the jackets shows that the cut-off may be lengthened to a larger extent with a less effect on the consumption. It therefore appears that a comparison of the performance of the engine with and without jackets when developing the same horse-power will show substantially the same result as that given in our paper.

Again, if it be admitted that an engine without jackets might be advantageously made larger for the same work than would be required if jackets were used, it is impossible that the increase of size by one-fifth, or somewhat more, can have a marked effect on the initial condensation.

---

* *Transactions of the American Society of Mechanical Engineers*, Vol. XIV., p. 386.

Digitized by Google

DCXIII.*

A GRAPHICAL METHOD OF DESIGNING SPRINGS.

BY G. R. HENDERSON, ROANOKE, VA.
(Member of the Society.)

AT the Pittsburgh meeting of this Society, in 1884, Mr. John W. Cloud presented an interesting paper on Helical Springs,† which has been largely used by parties designing springs for railway equipment and similar purposes. He plainly demonstrated that a circular cross-section of bar was the most economical one, and we are glad to note that all other shapes of sections are gradually passing out of existence, and that the circular section is taking their place.

The formulæ which Mr. Cloud gave, and which have most general use, are those for strength and deflection of the spring of circular section, viz.:

$$P = \frac{S_s \pi d^3}{16 R} \quad . \quad . \quad . \quad . \quad . \quad . \quad . \quad . \quad . \quad . \quad . \quad . \quad . \quad (1)$$

and

$$f = \frac{32 P R^2 l}{G \pi d^4} \quad . \quad . \quad . \quad . \quad . \quad . \quad . \quad . \quad . \quad . \quad . \quad . \quad . \quad (2)$$

where

P = load on spring.
S_s = maximum shearing fibre strain in bar.
d = diameter of steel of which spring is made.
R = radius of centre of coil.
l = length of bar before coiling.
G = modulus of shearing elasticity.
f = deflection of spring under load.

---

* Presented at the New York meeting (December, 1894) of the American Society of Mechanical Engineers, and forming part of Vol. XVI. of the *Transactions*.

† *Transactions of the American Society of Mechanical Engineers*, Vol. V., p. 173, No. 142.

Digitized by Google

Reuleaux, in *Der Konstrukteur*, gives, for semi-elliptic springs:

$$P = \frac{Snbh^2}{6\,l} \quad . \quad . \quad . \quad . \quad . \quad . \quad . \quad . \quad . \quad . \quad . \quad . \quad . \quad (3)$$

and

$$f = \frac{6\,Pl^3}{Enbh^3} \quad . \quad . \quad . \quad . \quad . \quad . \quad . \quad . \quad . \quad . \quad . \quad . \quad . \quad (4)$$

where

S = maximum direct fibre strain in plate.
n = number of plates in spring.
l = one-half length of spring.
P = load on one end of spring.
b = width of plates.
h = thickness of plates.
f = deflection of end of spring.
E = modulus of direct elasticity.

The above formula for deflection can be relied upon where all the plates of the spring are regularly shortened (see Fig. 20); but in semi-elliptic springs, as used, there are generally several plates extending full length of spring (see Fig. 21), and the proportion of these long plates to the whole number is usually about one-fourth. In such cases the value of

$$f = \frac{5.5\,Pl^3}{Enbh^3} \quad * \quad . \quad . \quad . \quad . \quad . \quad . \quad . \quad . \quad . \quad . \quad . \quad . \quad . \quad (5)$$

While all these formulæ are simple, yet containing several variables and powers, a great deal of time is often consumed in

---

* For a spring with all the plates full length we would have

$$f = \frac{4\,Pl^3}{Enbh^3},$$

so for one-fourth of the leaves full length, the deflection would be decreased approximately one-fourth of the difference between

$$\frac{6\,Pl^3}{Enbh^3} \text{ and } \frac{4\,Pl^3}{Enbh^3} \text{ or } \frac{5.5\,Pl^3}{Enbh^3}.$$

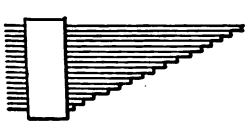

Fig. 20.

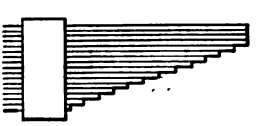

Fig. 21.

Digitized by Google

determining the most advantageous proportions for the purposes required. The writer, having much spring designing to do, has therefore laid out a few simple diagrams, which facilitate greatly the calculations of proportions of new springs, and the properties of springs whose proportions are known.

In the *Engineering News* of September 28, 1893, Prof. W. F. Durand, member of this Society, called attention to the use of logarithmic cross-section paper for rapidly solving equations containing variables affected with various indices, and it is to the use of this paper, in connection with these spring formulæ, that I desire to call your attention.*

We will first decide on the values to be given the several constants in the above equations.

S_s should be taken at 80,000 pounds per square inch, when spring is down solid. This is equivalent to a value of $S = 100{,}000$ pounds per square inch, and is well inside of the elastic limit for tempered round steel up to $1\frac{3}{8}$ inch diameter.

S should be taken at 80,000 pounds per square inch, with maximum static load on spring; the test load may be 25 per cent. greater, or up to 100,000 pounds per square inch, and the oscillations may cause this strain, or slightly more.

E may be taken at 30,000,000 pounds.

G may be taken at 12,000,000 pounds.

Referring now to diagram No. 1 (Fig. 22), "Strength of Helical Springs," we take formula 1,

$$P = \frac{S_s \pi d^3}{16\,R}, \text{ considering that}$$

P = tons (2,000 pounds) load on spring when down solid.

S_s = 80,000 pounds, or 40 tons, when down solid.

If R and d are in inches, then

$$P = \frac{S_s \pi d^3}{16\,R} = C\frac{d^3}{R}, \text{ and } \log. P = \log. C - \log. R + 3 \log. d,$$

when

$$C = \frac{40\,\pi}{16} = 7.85.$$

$$\therefore \log. P = \log. 7.85 - \log. R + 3 \log. d \quad . \quad . \quad . \quad . \quad . \quad (6)$$

* For explanation of logarithmic cross-section paper, see *Engineering News*, Vol. XXX., p. 248.

Digitized by Google

Starting, then, at point 7.85 on the axis of ordinates, we find that log. R is $-$, and its coefficient $= 1$, so we draw a line downwards at an angle of 45 degrees (tan. $= 1$). 3 log. d we represent by lines drawn upward ($+$), and at an angle whose tangent is 3. Now, if we wish to know the safe load in tons

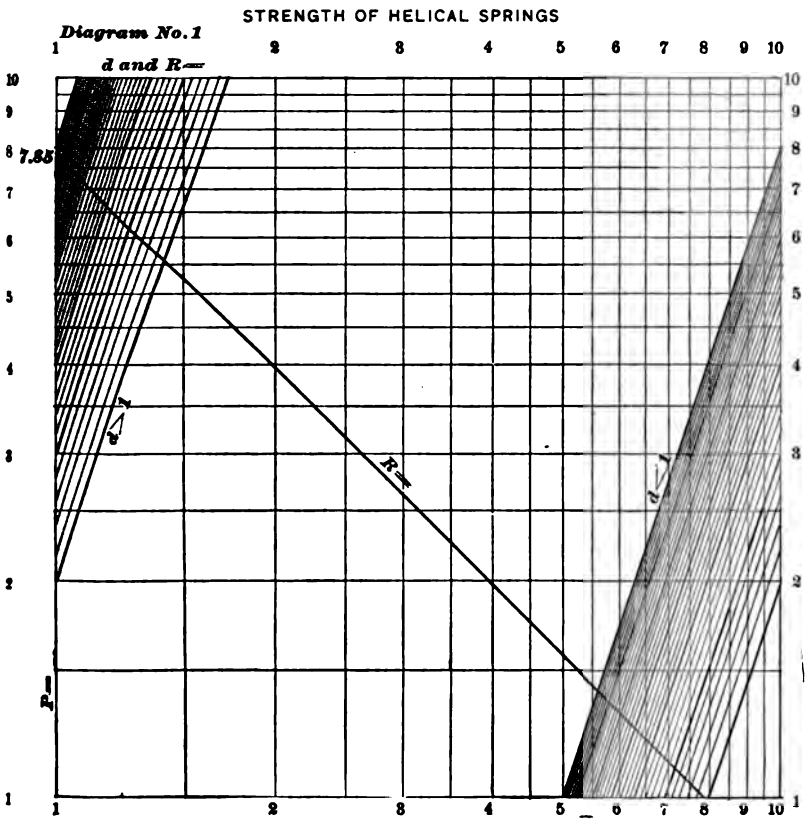

FIG. 22.

$$P = \frac{S_s \pi d^3}{16\,R} = C\frac{d^3}{R}, \text{ and log. } P = \log. C - \log. R + 3 \log. d.$$

$C = 7.85$. $\therefore$ log. P = log. 7.85 − log. R + 3 log. d.

P = tons safe load on spring when spring should be solid; $S_s = 40$ tons of 2,000 lbs. each, safe ult. fibre strain; R = radius of coil, and d = diam. wire, in inches.

on a spring whose radius $R = 2$ inches, and diameter of bar $d = \frac{3}{4}$ inch $= .75$ inch, we follow down the diagonal line from 7.85 to intersection with ordinate marked 2, which occurs at 3.93 on the vertical scale. As $d < 1$, start at right-hand side,

Digitized by Google

at 3.93 vertically, and run down parallel with the slant lines to 7.5 (.75 × 10, considered to be in the contiguous left-hand square, as any number less than one has a negative logarithm) ordinate, and read 1.65 tons off on the vertical scale; at this load the spring should either be solid, or arranged so that no further strain could come upon it.*

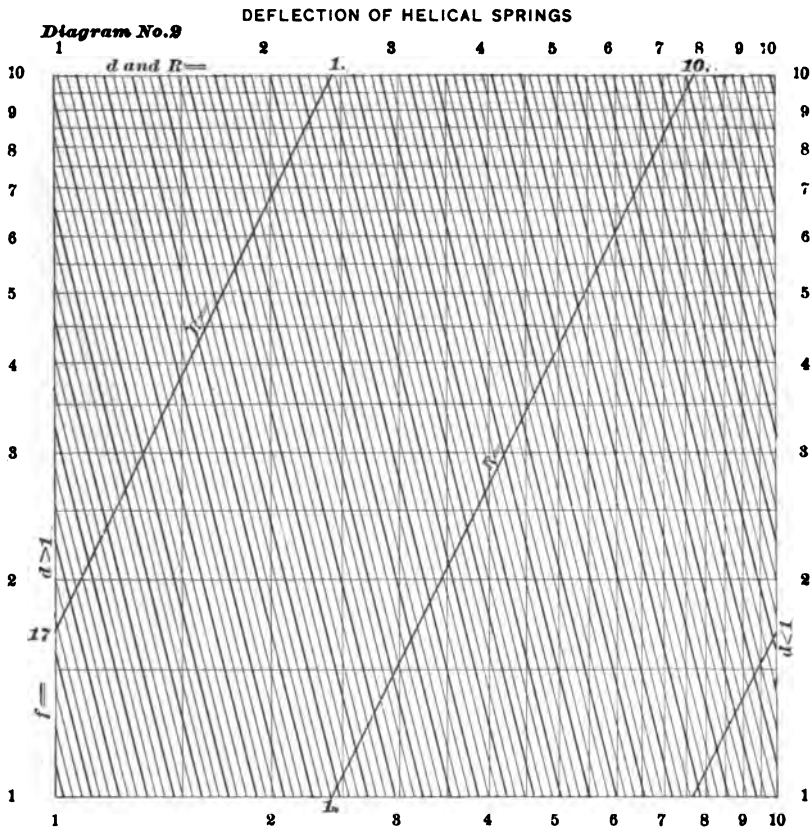

FIG. 23.

$$f = \frac{32\,PR^3l}{G\pi d^4}, \text{ and for } P = 1 \text{ ton, and } l = 100'', \; f = .17\,\frac{R^3}{d^4}.$$

Log. f = log. .17 + 2 log. R − 4 log. d.

f = deflection with one ton load, if spring were 100 inches long; R = radius of coil, in inches; d = diam. of wire, in inches.

If $d = 1\frac{1}{4}$ inch, then run up on left side from 3.93 and find at intersection with 1.25 ordinate, 7.6 tons. By reversing the

* It is customary to give helical springs a maximum static load about one-half the solid load, though two-thirds is sometimes used.

Digitized by Google

process, the size of steel for a given load may be found, and, in fact, every variation of the problem may be quickly considered. A careful inspection of the diagram will readily show how easily this may be done.

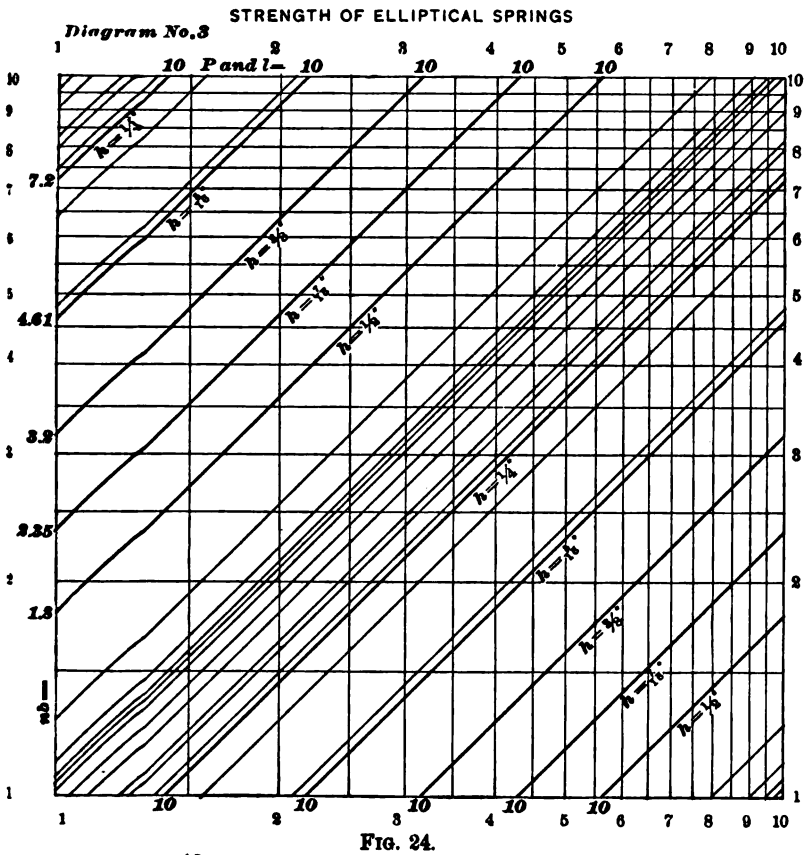

FIG. 24.

$$nb = \frac{18}{40h^2} Pl = CPl, \text{ and } \log. nb = \log. C + \log. l + \log. P.$$

Values of C for values of $h = \begin{cases} h = \frac{1}{2}'' & \frac{7}{16}'' & \frac{3}{8}'' & \frac{5}{16}'' & \frac{1}{4}'' \\ C = 7.2 & 4.61 & 3.2 & 2.35 & 1.8. \end{cases}$

P = tons total safe working load on spring; l = span, in feet; nb = total width of plates, in inches; h = thickness of plates, in inches.

In designing a spring, after we have determined the size of steel and coil, we must next consider the deflection. Diagram No. 2 (Fig. 23), "Deflection of Helical Springs," is drawn up from formula 2,

$$f = \frac{32\,PR^3l}{G\pi d^4}, \text{ in the following manner:}$$

Digitized by Google

Let us now take up elliptical springs. Diagram No. 3 (Fig. 24), "Strength of Elliptical Springs," was constructed as follows:

In formula 3, $P = \frac{Snbh^2}{6l}$, P was made equal to half the total load on spring, and l equal to half the span; but we will now consider that P = total safe working load on spring, in tons, and l = span, in feet; other values as above, then,

$$\tfrac{1}{2}P = \frac{40\,nbh^2}{6\,(\tfrac{1}{2}\cdot 12\,l)} = \frac{40\,nbh^2}{36\,l}, \text{ and}$$

$$nb = \frac{18}{40\,h^2}Pl = CPl, \text{ where } C = \frac{18}{40\,h^2},$$

$$\text{and log. } nb = \text{log. } C + \text{log. } l + \text{log. } P \quad . \quad . \quad . \quad . \quad . \quad (8)$$

For $h = \frac{1}{4}$ inch, $\frac{5}{16}$ inch, $\frac{3}{8}$ inch, $\frac{7}{16}$ inch, $\frac{1}{2}$ inch.
$C =$ 7.2, 4.61, 3.2, 2.35, 1.8.

As these components are all positive, and all of the first power, the slant lines will all be at an angle of 45 degrees, and in the first quadrant; and there should be lines starting at 1 8, 2.35, 3.2, 4.61, and 7.2, to correspond with the different values of C given above.

Take a semi-elliptic spring of 3 feet span, to carry 5 tons static maximum load, and to be made of $\frac{3}{8}$ inch × 3 inch steel plates. Start at 3.2, and follow up to intersection with ordinate 3 at 9.6, then from 9.6 the slant line ends at 10 without reaching ordinate 5 for value of P. We must, therefore, follow up from the same point projected to base line, remembering that we are now in a superimposed square, as far as values in the vertical are concerned, and that readings are to be multiplied by 10. The intersection with ordinate 5 is at 4.8, or multiplied by 10 = 48 inches for nb, and as plates are to be 3 inches wide, $\frac{48}{3} = 16$, as the number of plates needed.

If the spring be double, or full elliptic (as in passenger cars), nb refers to the plates in one-half of spring only.

For the deflection of semi-elliptic springs, see diagram No. 4 (Fig. 25). Formula 5, $f = \frac{5.5\ Pl^3}{Enbh^3}$, reduced to the same values as formula 8, becomes

$$f = \frac{5.5\ Pl^3}{Enbh^3} = \frac{5.5 \times 1{,}000 \times (\frac{1}{2}^2\ l)^3}{30{,}000{,}000\ nbh^3} = C\frac{l^3}{nb},$$

Digitized by Google

where f = deflection in inches, per ton of load, and for

$$\begin{array}{lccc} h = & \frac{1}{4} \text{ inch}, & \frac{3}{8} \text{ inch}, & \frac{1}{2} \text{ inch}, \\ C = & 2.53, & .75, & .31, \end{array}$$

$$C \text{ equalling } \frac{5.5 \times 1{,}000 \times 6^3}{30{,}000{,}000\ h^3},$$

so $$\log. f = \log. C + 3 \log. l - \log. nb \quad . \quad . \quad . \quad . \quad . \quad . \quad (9)$$

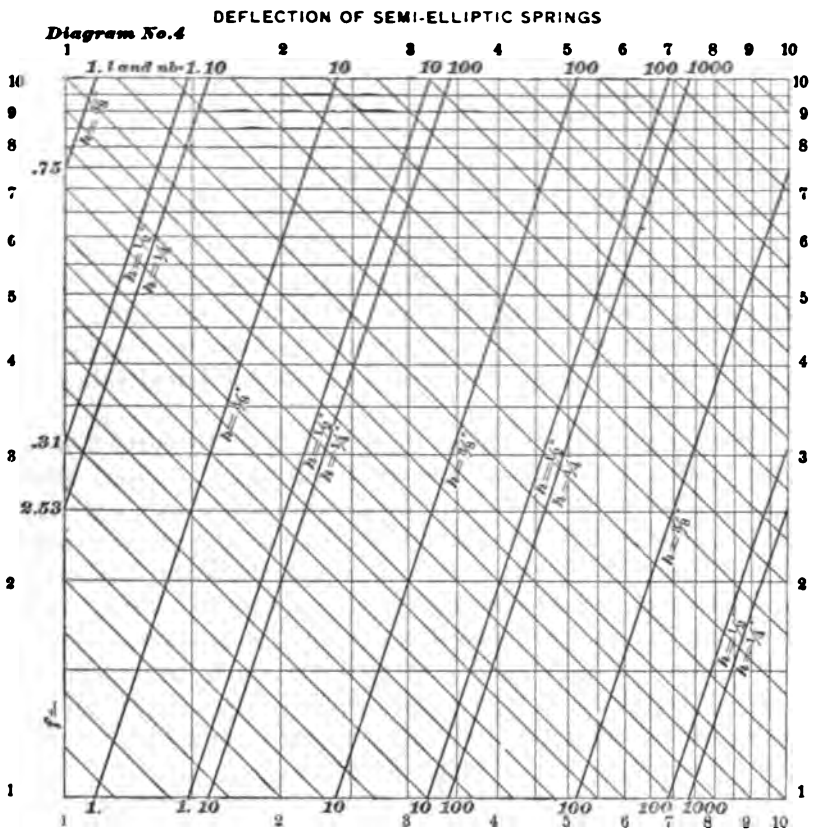

FIG. 25.

$f = \frac{5.5\ Pl^3}{16\ Enbh^3}$, and for $P = 1$ ton (2,000 lbs.) and l in feet, $f = C\ \frac{l^3}{nb}$.

Log. f = log. C + 3 log. l − log. nb.

Values of C for values of $h = \begin{cases} h = & \frac{1}{4}'' & \frac{3}{8}'' & \frac{1}{2}'' \\ C = & 2.53 & .75 & .31 \end{cases}$

f = deflection, in inches, per ton of load; l = span, in feet; nb = total width of plates, in inches; h = thickness of plates, in inches.

Digitized by Google

And from points 2.53, .75, and .31 we must draw upward lines whose tangent is 3, and for log. *nb*, lines downward at 45 degrees. (All the 3 log. *l* lines must be extended to run into one or more superimposed squares.)

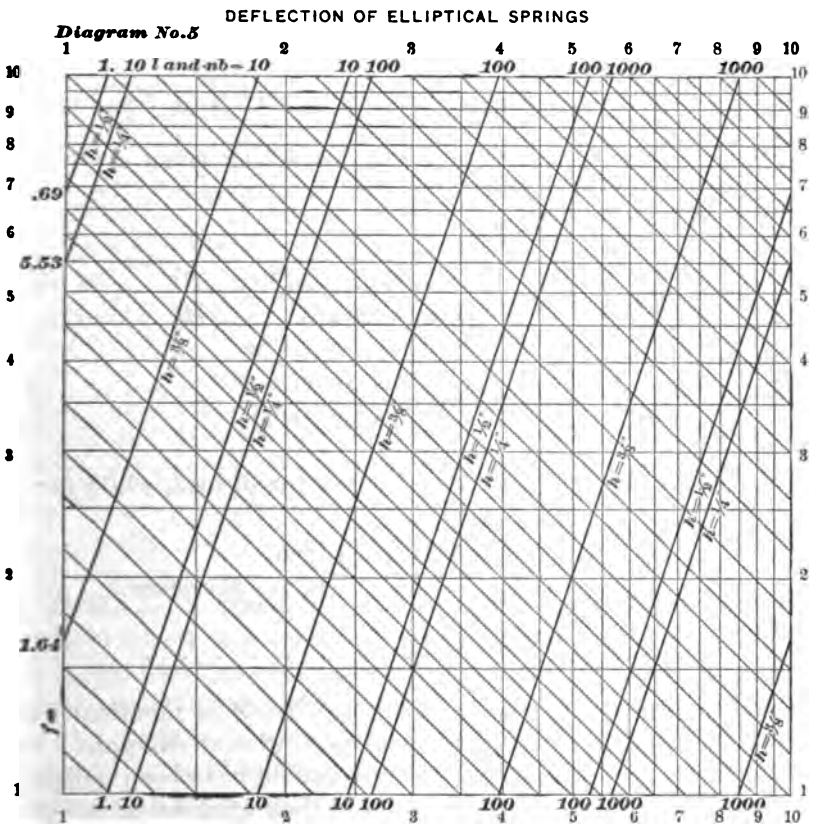

FIG. 26.

$$f = \frac{3\,Pl^3}{4\,Enbh^3}, \text{ and for } P = 1 \text{ ton (2,000 lbs.) and } l \text{ in feet, } f = C\frac{l^3}{nb}$$

Log. f = log. C + 3 log. l − log. nb.

Values of C for values of $h = \begin{cases} h = & \frac{1}{4}'' & \frac{3}{8}'' & \frac{1}{2}'' \\ C = & 5.53 & 1.64 & .69 \end{cases}$

f = deflection, in inches, per ton of load; l = span, in feet; nb = total width of plates, in inches ($\frac{1}{2}$ spring); h = thickness of plates, in inches.

Taking the spring above considered, we follow up from .75 (7.5 ÷ 10) to top, start at bottom and run up second line marked $\frac{1}{4}$, then again up third line marked $\frac{3}{8}$ to intersection with ordinate 3, we read 2 × 10 (as we have passed to second upper square) = 20. Now, from 20 downward we pass unity × 10 = 10,

Digitized by Google

and then from top to right side we run off at 2 (having reached only $nb = 10$), then, starting again at 2 on axis of ordinates, run down into lower square (reading $\div 10$) to intersection with 48 (4.8×10), we find $f = 4.15 \div 10 = .415$ inch per ton of load, and for 5 tons $f = .415 \times 5 = 2.075$ inches.

For the deflection of elliptical springs we refer to formula No. 4, $f = \frac{6\,Pl^3}{Enbh^3}$, and diagram No. 5 (Fig. 26). Now, P and l must be treated as in the last case, but the spring being composed of a pair of springs (one erect and one inverted), the value of f must be doubled, so

$$f = \frac{12\,Pl^3}{Enbh^3} = \frac{12 \times 1{,}000 \times (\frac{1}{2}\,l)^3}{30{,}000{,}000\,nbh^3} = C\frac{l^3}{nb},$$

$$C \text{ equalling } \frac{12 \times 1{,}000 \times 6^3}{30{,}000{,}000\,h^3},$$

and f being the deflection in inches per ton of load, while for

$$\begin{array}{lll} h = \frac{1}{4} \text{ inch}, & \frac{3}{8} \text{ inch}, & \frac{1}{2} \text{ inch}, \\ C = \quad 5.53, & \quad 1.64, & \quad .69\,; \quad \text{therefore,} \end{array}$$

$$\log. f = \log. C + 3 \log. l - \log. nb \quad . \quad . \quad . \quad . \quad . \quad . \quad . \quad . \quad (10)$$

As the method of using the diagram (No. 5) is identical with diagram No. 4, it will not be necessary to give an example.

In order to show that these formulæ (which have been deduced theoretically) are perfectly practical in their application, we give below some *actual* tests of springs, showing also the results as found by the diagrams.

TESTS OF HELICAL SPRINGS.

Ref. No.	R	d	l	No. tested.	f max.	f min.	f avg.	f by diagram.
1	1.44	.75	71	10	.74	.70	.73	.76
2	2.08	.94	64	12	.66	.50	.53	.55
3	2.50	1.25	74	10	.32	.29	.31	.33

Digitized by Google

TESTS OF SEMI-ELLIPTIC SPRINGS.

Ref. No.	h	l	nb	No. tested.	f max.	f min.	f avg.	f by diagram.
4.....	$\frac{3}{8}$	2.58	44	6	.33	.32	.32	.29
5.....	$\frac{1}{2}$	2.83	49	11	.36	.34	.35	.35
6.....	$\frac{1}{2}$	2.83	56	6	.31	.29	.30	.30
7.....	$\frac{1}{2}$	3.33	31.5	10	.94	.89	.91	.89

TESTS OF ELLIPTICAL SPRINGS.

Ref. No.	h	l	nb	No. tested.	f max.	f min.	f avg.	f by diagram.
8.....	$\frac{3}{8}$	2	54	16	.24	.21	.23	.24
9.....	$\frac{3}{8}$	3	90	20	...	...	.50	.49
10.....	$\frac{3}{8}$	$3\frac{1}{2}$	75	44	...	...	.95	.94

DISCUSSION.

Prof. L. S. Randolph.—This paper gives a very marked improvement on the usual method of calculating springs. Some time ago I had to redesign the springs for a railroad, but soon found that the amount of labor involved was prohibitory to the proper study of a spring until I had a series of tables calculated for each style of spring, and even then the labor attending the design of a given spring was excessive. The method devised by the author of the paper seems to me exceptionally valuable on account of ease with which the effect of slight variations can be studied.

For elliptical springs a modulus of elasticity of thirty-two million was found to give more accurate results than thirty million; in fact, that figure was obtained from the results of tests of a large number of elliptical springs. The maximum shearing fibre strain was varied with the variation in the diameter of bar; subsequent experience with the springs designed in that way indicated that it was a useless refinement, and that the figure given by Mr. Henderson (80,000) should be used for all ordinary sized bars.

Mr. Wm. Kent.—I would like to ask Mr. Henderson if he has

Digitized by Google

compared the results he has obtained with those published in the specifications of the Pennsylvania Railroad Company for springs, and also the paper published by Mr. J. Begtrup in the *American Machinist* about two years ago, which gives a very complete table for the working of springs of a great number of sizes. I had occasion to look up this subject some time ago, and found a paper by Mr. Hartnell, of the British Institution of Mechanical Engineers, treating of the subject, and the figures given by Rankine and Clark were shown to be very far away from the results of recent figures. Engineers generally, who have anything to do with springs, like much better to look at a table and pick out from it the spring which they want, rather than to design one themselves from a formula. Mr. Begtrup's table is very convenient for the purpose, but if we want a spring outside of the range of the table, of course we would have to use a formula.

*Mr. Henderson.**—I will say that I do not recollect having seen the paper in the *American Machinist* to which the gentleman refers, but as far as the Pennsylvania Railroad specifications are concerned, I have tried quite a number of them, and they agree very nicely with the diagrams. I was connected with the Pennsylvania Company when I worked up formula 5. I made tests of a great many driving springs at Altoona, and found that the deflection came nowhere near the formulæ given in books, and it occurred to me that the reason was this, that a semi-elliptic driving spring has a number of leaves extending the full length of the spring, and therefore is partly between a beam of uniform section and a beam of uniform strength; and by modifying the coefficient according to that proportion, I got a formula which corresponded very closely with actual tests.

With regard to the length of time taken in looking up a spring, I think you can use these diagrams about as quickly as looking up in a table. It is very seldom that you can find in a table what you want. Any one can design an elliptic spring from these two tables in about two minutes. It will take one minute to find the width of the plate and another minute the deflection. (Coil springs take somewhat longer.)

In regard to the coefficient of elasticity, of which Mr. Randolph speaks, I based these figures on 30,000,000 instead of 32,000,000,

* Author's closure, under the Rules.

Digitized by Google

and the result is that they agree so nicely with the actual tests that it hardly seems necessary to modify them.

In this connection I would like to suggest that if any one wishes to use these diagrams he should lay them out on logarithmic paper. He can obtain such logarithmic paper from Keuffel & Esser, New York. It costs about sixty cents a quire. The paper is divided up in tenths, and you can pick out very readily the exact values that you want, and these sheets make very nice blue prints, that can be used, preserving the originals.

After the meeting, Mr. John R. Freeman, member of this Society, sent me some sample sheets of beautifully engraved logarithmic cross-section paper, extending in both directions to 100, instead of 10 as in the diagrams. This paper would be very satisfactory for this purpose.

Digitized by Google

DCXIV.*

DRAWING OFFICE APPLIANCES.

BY A. W. ROBINSON, SOUTH MILWAUKEE, WIS.

(Member of the Society.)

THE following description of a drawing-board, easel, and blue-print frame is presented to the Society as furnishing simple and inexpensive examples of these items of office equipment.

The drawing-board shown in Fig. 27 has a top 36 inches by 54 inches, glued up with saw-cuts on the back in the usual way. It

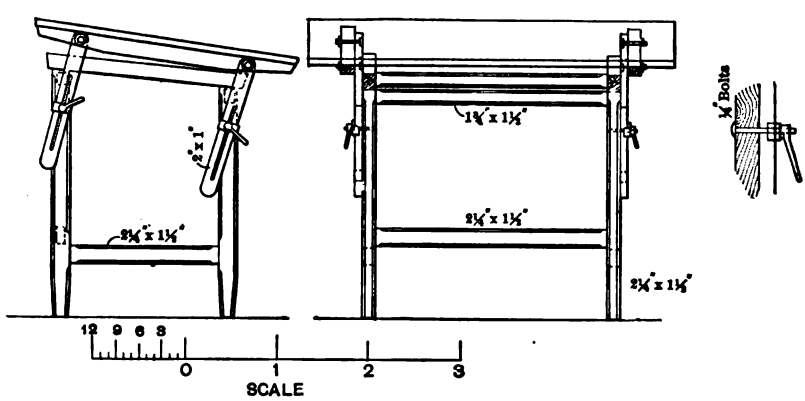

FIG. 27.

is of this size to suit standard sheets 23 inches by 36 inches, as described in paper No. 596, read June, 1894.† The top is made adjustable for slope and height by the slotted supports, as shown. This allows every draughtsman to suit himself in this regard.

---

*Presented at the New York meeting, December, 1894, of the American Society of Mechanical Engineers, and forming part of Vol. XVI. of the *Transactions*.

†The Relation of the Drawing Office to the Shop in Manufacturing: *Transactions American Society Mechanical Engineers*, Vol. XV., p. 965, No. 596.

Digitized by Google

The lower frame and legs are of oak, neatly chamfered. These tables complete were made by a plain carpenter and cost $7.50 apiece.

Each draughtsman needs besides his board some convenient means of holding drawings for reference. The easel (Fig. 28) fills this need. A number of drawings can be attached to the top edge by spring clothes-pins or clips, and turned over the back as required. This easel is also " home-made " and cost $6 each.

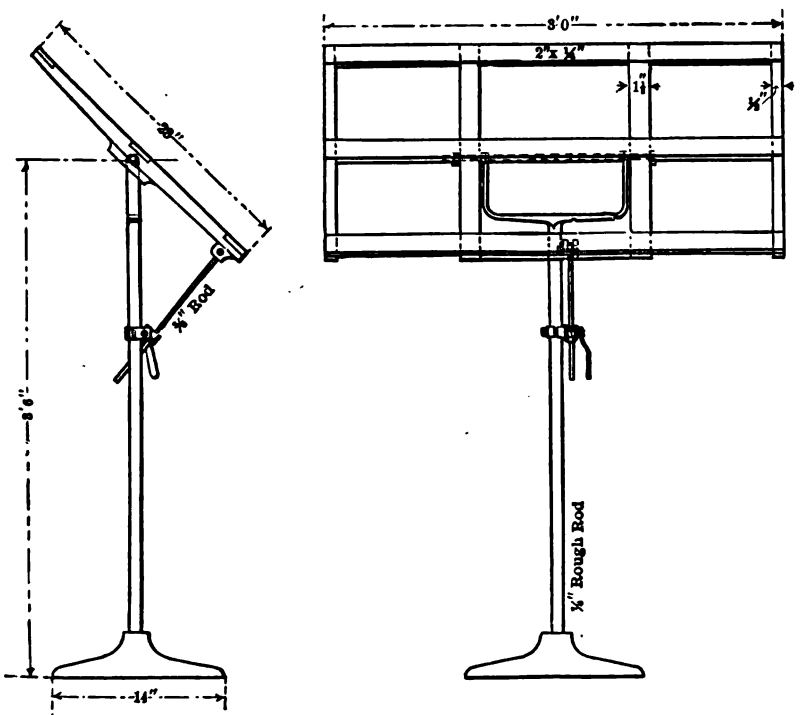

FIG. 28.

The blue-print frame shown in Fig. 29 is 25 inches by 38 inches inside. It is carried on two pairs of small grooved wheels attached to the side, and upon which it is reversible, as shown. The tightening of the back is done by three cross-bars pivoted at their centres. The ends of the bars engage with cleats screwed to the inside of frame at a slight angle, so that they wedge the bars to any desired pressure on the back. It is not considered necessary to provide for a double-swing support so that the sur-

Digitized by Google

face of the frame can be brought normal to the sunlight. This undoubtedly allows of quicker printing during morning and

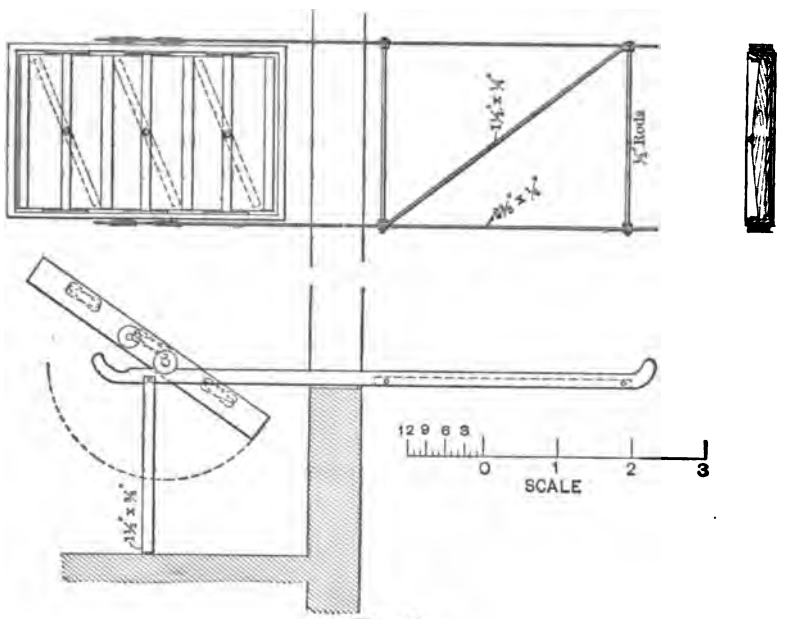

FIG. 29.

evening hours; but the saving is not great, and is obtained at the expense of simplicity. This frame cost about $18, including iron track and plate glass three-eighths inch thick.

DISCUSSION.

Mr. C. J. H. Woodbury.—In connection with the subject matter of this paper, there is a very simple method of making tracings upon drawing paper, not upon tracing cloth or tracing paper, by means of a drawing table (Fig. 30), which I might almost call a drawing board made of a sheet of plate glass, and underneath which is placed an incandescent lamp with a conical shade, trained right directly under the glass, in an inverted position, and close to the lower surface. This will throw the light through two sheets of drawing paper well enough to reveal the original drawing, so that, section by section, a drawing can be copied, and the second copy will appear like an original drawing, and not a tracing.

Digitized by Google

The wood frame around the plate is flush with the upper surface of the glass, and is about half an inch thick at the outer rim, so that it will serve to secure the two sheets of paper, either by thumb-tacks or by spring clamps.

The cross-bar of the standard for an ordinary incandescent drop-lamp fixture is one of the most convenient forms for this purpose,

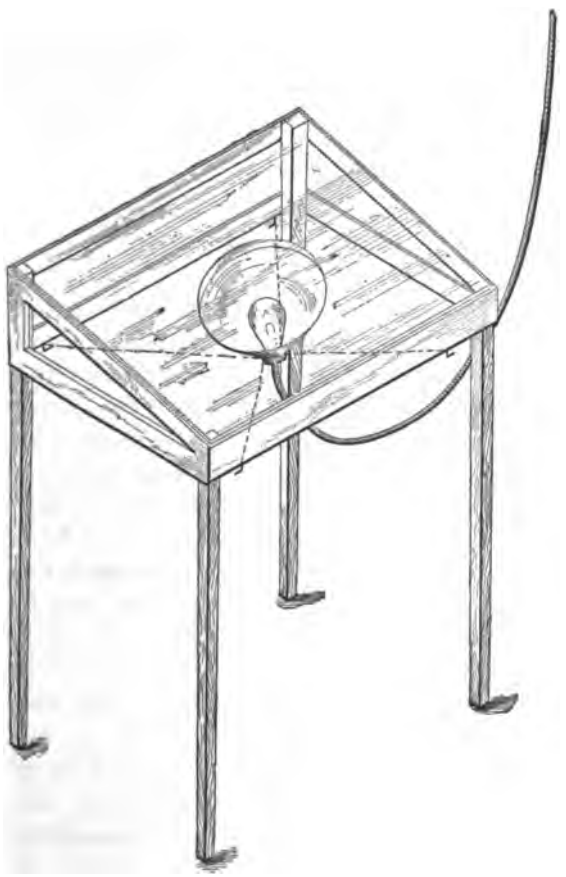

FIG. 30.

and is secured to any position by four strings, tied with slip-knots to the four legs of the table.

Mr. George R. Henderson.—We had occasion to make a number of tracings on bond paper, and it was rather thick to see through. We adopted very much the same plan as described by Mr. Woodbury. In the centre of the table I had a pane of glass, about

Digitized by Google

10 × 13 inches, inserted, and by laying the tracing to be copied from on the glass, and then the bond paper on top, with some illumination underneath, it worked very nicely. It is practically the same device described by Mr. Woodbury, but it is not quite so large. It was intended to produce small sketches, about 9 × 14 inches. The rest of the table was just the same as an ordinary tilting drawing table.

Digitized by Google

DCXV.*

COMPARISON OF THE ACTION OF A FIXED CUT-OFF AND THROTTLING REGULATION WITH THAT OF THE AUTOMATIC VARIABLE CUT-OFF, ON COMPOUND AND TRIPLE-EXPANSION ENGINES.

BY CHARLES T. PORTER, MONTCLAIR, N. J.
(Honorary Member of the Society.)

THEORETICALLY, the regulation of the speed of steam-engines by the automatic variation of the point of cut-off has a decided advantage, in respect to economy, over the method of throttling from any point of cut-off whatever. When to this there is added the feature of regulation at the point of admission to the cylinder, it is no wonder that the system of automatic variable expansion, in one or the other of its two forms, as operated by a detachable or by a positive-motion valve-gear, should have come, as it has done, into well-nigh universal use, on stationary engines which aim at economy.

For more than forty years following Mr. Sickles' invention of the liberating valve-gear, or trip cut-off, as it used to be called, in 1842, which was the foundation of the liberating system, the cut-off, in its many forms, held the minds of American engineers by such a fascination that they seemed unable to look beyond it. Perhaps no other subject ever called the versatile American ingenuity into such a remarkable state of activity. The *Scientific American* was the leading mechanical journal published in this country before the war. I remember saying to Mr. Munn, its principal proprietor, that he ought to name it the *Weekly Valve and Cut-off*, from the constant succession of these devices which appeared in its columns. Now we are

* Presented at the New York meeting (December, 1894) of the American Society of Mechanical Engineers, and forming part of Vol. XVI. of the *Transactions*.

Digitized by Google

returning to that which was held by Watt to be of great importance, and the subject which to-day seems uppermost in engineering thought is, cylinder condensation and how to prevent it. Engineers are alive to the fact that the variable cut-off system, admitting the full boiler pressure to the cylinder, requiring the internal surfaces, at the commencement of each stroke, to be reheated, by the entering steam, from the temperature of the exhaust up to that of the boiler, and then filling the waste room with steam of full density, presents the conditions for the greatest loss of heat, and waste, also, of the uncondensed steam.

As the steam is cut off earlier and earlier, the percentage of loss from both these causes obviously increases. It is true that less heat is transformed into work, and more of this is supplied by heat set free on expansion, but the difference between these at different points of cut-off is comparatively insignificant.

These losses are so serious that, in the judgment of prominent builders of variable expansion engines, at very early cut-off the steam lost from the first cause alone "is in excess of that usefully employed." They are much reduced by expanding through two or more cylinders. Indeed, the high pressures, now coming into use with so much advantage, could not be successfully worked in a single cylinder, chiefly on account of the enormous losses which would be suffered from these two causes.

The principal gain in compound and triple-expansion engines is obtained from the greater number of expansions employed. But a large gain results, also, from the avoidance of early cut-off. It is a most interesting and valuable feature of this system, that a large number of expansions are obtained while cutting off in each cylinder at a comparatively late point of the stroke.

The gain from the avoidance of early cut-off is proved in common practice. If, for example, it is desired to employ 9 expansions in a non-condensing engine, expanding, say, from 162 pounds to 18 pounds, total pressures, it is found much more economical to use two cylinders, and cut off at about one-third of the stroke in each, than to cut off at one-ninth of the stroke in one cylinder. Again, in triple-expansion engines, as made until now, it has been found that there is no gain in employing much over 20 expansions, cutting off not earlier than .3 of the stroke in each cylinder. The gain from a greater number of expansions, considerable as it is, becomes neutralized, or

Digitized by Google

converted into positive loss, by the increased proportionate losses from cylinder condensation and waste room. If a much larger number of expansions is desired, this has required the addition of a fourth cylinder.

When the variable cut-off is employed on engines working under large changes of resistance, then, whether the engine be simple or compound or triple expansion, just in the degree that the variable feature comes into action does the cut-off run to more wasteful points of the stroke, and often, indeed continually, to points which are exceedingly wasteful.

It has appeared to me that an opening presented itself for a large improvement in the direction of economy, by employing a fixed point of cut-off, suitably selected, and regulating by means of a throttling governor; thus avoiding early cut-off entirely. There can, I think, be no doubt that, although the theoretical gain by cutting off earlier is considerable, this is out-weighed many times over, by the increase in the losses from cylinder condensation and waste room.

Additional reasons for this belief are afforded in the facts, that, in its passage through the throttling valve, the steam is dried, or if already dry is superheated, by heat set free on reduction of pressure, and that the efficiency of the steam-jacket to prevent cylinder condensation increases just in the degree that the pressure of the steam entering the cylinder has been reduced by throttling. It is true that in the intermediate and low-pressure cylinders the temperature in the jacket may always be higher than that of the entering steam, so that the last point is pertinent to the high-pressure cylinder only; but the especial importance of preventing cylinder condensation at the commencement of the application of the force of the steam is sufficiently obvious.

In the system here presented, the economic conditions are, as will appear in following papers, considerably improved over existing practice; but in order to observe the gain resulting from avoidance of early cut-off merely, these conditions will now be supposed to be the same. Let the losses from internal condensation and waste room be assumed at 20 per cent. in a variable cut-off engine, and also in a fixed cut-off engine, both cutting off at one-third of the stroke in each cylinder, and working dry steam. In the former engine, these losses continue the same, however early the cut-off may take place. When this is at .1 of the stroke,

Digitized by Google

a not unusual point, they add about 70 per cent. to the steam usefully employed.

If the latter engine be throttled to a corresponding reduction of power, then from the superheating of the steam, and the increased efficiency of the steam-jacket, and the complete filling of the waste room by compression, these losses, instead of increasing in relative amount, must nearly if not quite disappear. The diagrams on pages 115 and 116 were taken by Professor Denton from one of these engines, running at a speed of 300 revolutions per minute. The smaller one shows this complete compression. It is to be observed that the pressure cannot rise by compression quite to the initial, as shown in this diagram, unless the interior surfaces have been brought up to the full corresponding temperature before admission.

A fixed point of cut-off is also better adapted to the system of compounding. The volume of steam exhausted from the high-pressure cylinder is a constant volume. It is clearly necessary to the proper manipulation of the steam, that the volume or capacity of the receiving cylinder, up to the point of cut-off, shall be equal to this, and shall be constant. The fixed cut-off enables this requirement to be complied with. A variable cut-off on the receiving cylinder renders such a compliance impossible. The volume in this cylinder, up to the moving point of cut-off, may be two or three times too large, or it may be an indefinite number of times too small. It is clear, that if the variable cut-off had not been already in common use, nothing so unsuitable would ever have been devised for this purpose.

For the attainment of the best results from the system of fixed cut-off and throttling regulation, several things are required. Prominent among these are, a better means of steam distribution, a more sensitive governor, smaller waste room, dry steam, and immunity from water in the cylinder on starting, the possibility of which latter, in any serious amount, would render small waste room impracticable. These requirements, together with others of a less imperative nature, I have endeavored to supply. The means employed for this purpose will be described in following papers.

It remains to notice objections to this system which will naturally suggest themselves, and which must be shown not to be well founded, if the system is to be received with favor.

The first will be, that the throttling engine will not regulate

Digitized by Google

so closely as much of the service of the present day requires. This objection would be well taken if a sluggish governor were combined with a large steam-chest; therefore, I do not use these. The engine has no steam-chest, only the necessary pipe connection. I have also devised a form of governor that is entirely frictionless. These two features give the closest possible regulation. Unless the fall of resistance be very great and sudden, the piston will not, during even a single stroke, receive an excess of pressure above that which is necessary to produce action in a frictionless governor. This will be an advance in regulation.

A second objection may be, that the steam will be wire-

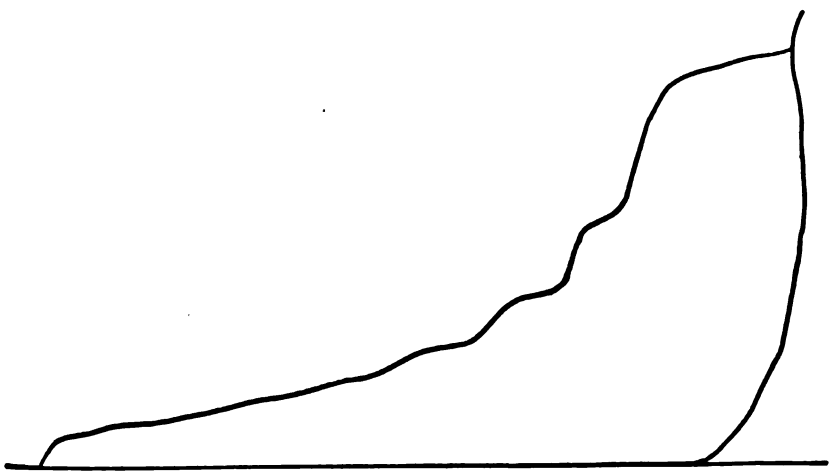

FIG. 31.—Full Power Load. 300 Revolutions. Scale 40.

drawn. The diagram on the next page shows that this is not likely to be the case.

A third objection will be want of range. This, if it existed, would be serious, rendering the engine unsuitable for many important uses. But it does not exist. The valves are actuated by a cam, which may be made of a form cutting off at any desired point up to three-fourths of the stroke, although I apprehend that five-eighths is as late as will ever be employed Let it now be required to combine in the best manner economy and range. I should, for such a requirement, use a cam cutting off, say, at .35 of the stroke in each cylinder of a series This will give, theoretically, 2.8 expansions in one cylinder, about 8

Digitized by Google

expansions in a compound engine, and 22 expansions in a triple-expansion engine. The cam motion enables, as will be shown in another paper, about 80 per cent. of the theoretical expansion to be realized in practice. These expansions give excellent economy in non-condensing and condensing engines respectively. The range is from the boiler pressure, say 150 pounds gauge press-

FIG. 32.—Friction Load. 300 Revolutions. Scale 40.

ure, following .35 of the stroke in the high-pressure cylinder, down to 0. The point of cut-off is as late as is consistent with economy. It cannot be made later without sacrificing, in a greater or lesser degree, the gain from expansion. So the engine has ample range and ample expansion, while avoiding an earlier cut-off than .35 of the stroke.

Digitized by Google

DCXVI.*

DESCRIPTION OF A CAM FOR ACTUATING THE VALVES OF HIGH-SPEED STEAM-ENGINES.

BY CHARLES T. PORTER, MONTCLAIR, N. J.

(Honorary Member of the Society.)

THE limitations which are imposed by the eccentric on the movements of the valves of steam-engines have always been to engineers a matter of extreme regret. In the liberating valve gear the most serious of these limitations are avoided, but at the cost of separate ports and valves for exhausting, and of restriction to a slow rotative speed. Positive motion valve gear must be employed on engines which are run at high rotative speeds, and in these engines, unless the complication is introduced of independent cut-off valves operated by a separate eccentric, or of an independent exhaust, all these limitations of the valve motion have to be submitted to.

But are we really shut up to the eccentric? Cannot any better means be found for imparting motion to the valves? The cam to be here described is presented as affording a practical solution of this problem, so far, at least, as relates to stationary, non-reversible engines. Its application to reversible engines has not yet been considered, but it is not thought to present any serious difficulty.

The term "cam" will at first strike engineers in a manner not especially favorable. One of large experience, after witnessing the operation of this cam, seeing it to be so different from all that in his mind was associated with the word, insisted that it was not a cam, and ought not to be called so. It is, however, a cam; there is no other name for it.

In presenting this cam, I will first state what it does, and

* Presented at the New York meeting (December, 1894) of the American Society of Mechanical Engineers, and forming part of Vol. XVI. of the *Transactions*.

Digitized by Google

afterwards give a description of it and of the method by which it is developed.

Its use is as follows:

First.—It imparts to the valves an opening movement, for steam admission, which, cutting off at two-tenths of the stroke, is three and one-third times larger than that given by an eccentric of the same throw advanced to cut-off at the same point. This advantage, of course, diminishes as the point of cut-off is carried later. Cutting off at four-tenths of the stroke, the opening made by the cam for admission is twice as wide as that made by the eccentric.

Second.—It permits the expansion to continue, in all cases, to eleven-twelfths of the stroke, compression taking place at the same point of the return stroke. These points may be varied somewhat, by giving exhaust lead or lap to the valves. The effect of a small amount of exhaust lap is shown in the diagrams taken by Professor Denton, and represented in the preceding paper.

Third.—It compensates for the inequalities in piston motion which are produced by the angular vibration of the connecting-rod, making the point of cut-off the same on the opposite strokes, and giving at the back end of the cylinder the greater lead, and wider opening for admission, which are required by the more rapid motion of the piston at that end of its stroke.

As a consequence of the larger opening, the cam enables perfect steam distribution to be made, at high piston speed, by the use of comparatively small valves, the same valve performing the functions of admission, cut-off, and release, and making a single opening for admission and a single opening for release. This gives extreme simplicity of construction. This simplicity enables the waste room to be reduced to from one and one-half per cent. to two per cent. of the piston displacement, for a piston travel of seven hundred and fifty feet per minute, with a stroke of thirty-six inches. The manner in which this reduction of waste room is effected will be described in a following paper. In all the above respects the action of the cam seems to leave nothing to be desired.

The chief value of the cam will appear in its use on compound and triple-expansion engines. The eccentric is utterly unadapted to the requirements of high grades of expansion. It is really surprising to observe to what an extent the combination of the usual large waste room, with the early release com-

Digitized by Google

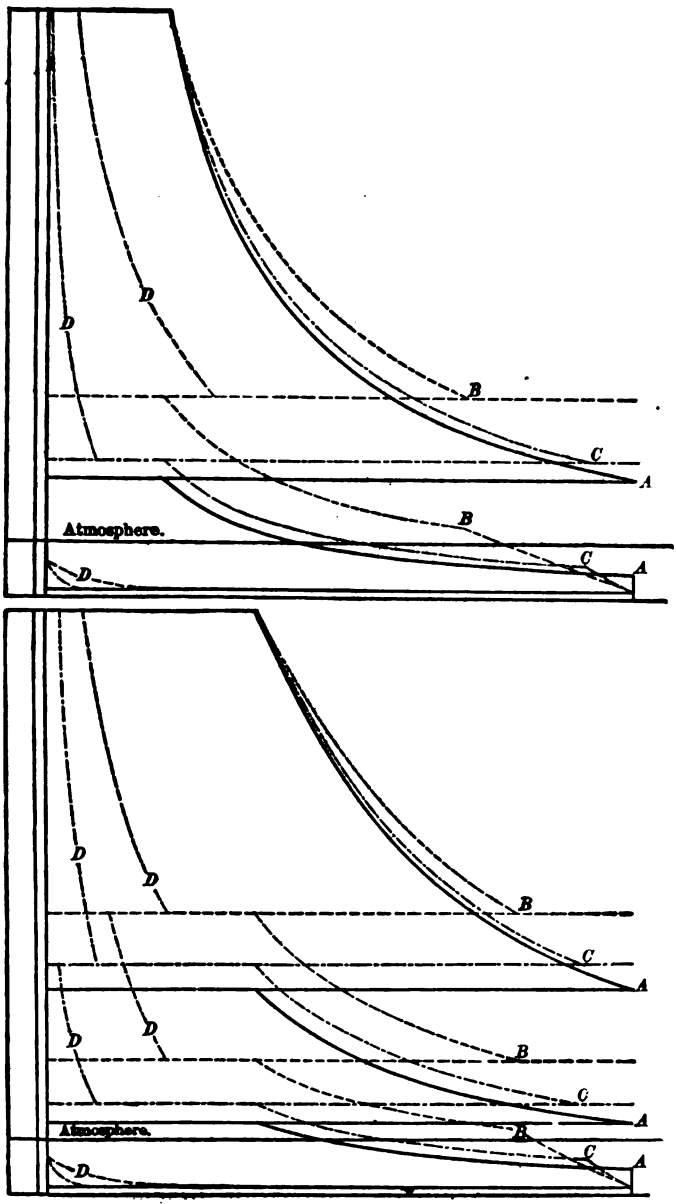

FIG. 88.

pelled by the eccentric, reduces the degree of expansion that is obtainable in two or three cylinders.

This is exhibited in the above diagrams. In these, steam of

Digitized by Google

160 pounds total pressure is shown cut off at .2, and at .35 of the stroke, expanded, the former in two, and the latter in three cylinders. The diagrams are drawn without any fall of pressure between the cylinders. The exhaust is without lap or lead.

The full line diagrams (*A*) represent ideal expansion, continued to the end of the stroke, without waste room. In the first of these, the terminal pressure is 6.4 pounds, the number of expansions is 25, and the proportions of the cylinders are 1 and 5. In the second, the terminal pressure is 6.847 pounds, the number of expansions is 23.37, and the proportions of the cylinders are 1, 2.86, and 8.16.

The outer dotted diagrams (*B*) represent expansion with seven per cent. of waste room, which is probably less than the average amount in high-speed engines, and the release as made by the eccentric, namely, at .715 of the stroke for .2 cut-off, and at .8 of the stroke for .35 cut-off.

In the first of these diagrams, the terminal pressure is 18.75 pounds, the number of expansions is 8.53, and the proportions of the cylinders are 1 and 2.94. In the second diagram, the terminal pressure is 18 pounds, the number of expansions is 8.88, and the proportions of the cylinders are 1, 2.08, and 4.325. The expansions obtained are, in the first case, 34 per cent., and in the second, 38 per cent. of the theoretical, and this is the very best that can be done.

It will be asked, How, then, is so low a terminal pressure reached in practice? The terminal pressure is arbitrarily fixed by the size of the low-pressure cylinder. There are two ways besides expansion for getting down to a low terminal, namely, by fall of pressure before cut-off, known as wire-drawing, and by fall of pressure between the cylinders. Measurement of the diagrams will show, in all cases, no useful effect obtained beyond that got from 8.53 and 8.88 expansions, in these two cases, but, on the contrary, less than this, by the amount of steam condensed on entering the second and third cylinders.

Except as partially relieved by independent cut-off valves, or by an independent exhaust, as in the Porter-Allen engine, the high-speed engine has, in its application to compounding, had to struggle under the crushing load of this loss up to the present time; and in the Porter-Allen engine, I found the waste room alone, which amounted to about seven per cent., to be fatal to any high degree of economy in compounding. Obviously, ex-

Digitized by Google

pansion nearly to the end of the stroke must be joined to small waste room for the attainment of the best results.

The inner dotted diagrams (C) represent the approximation to

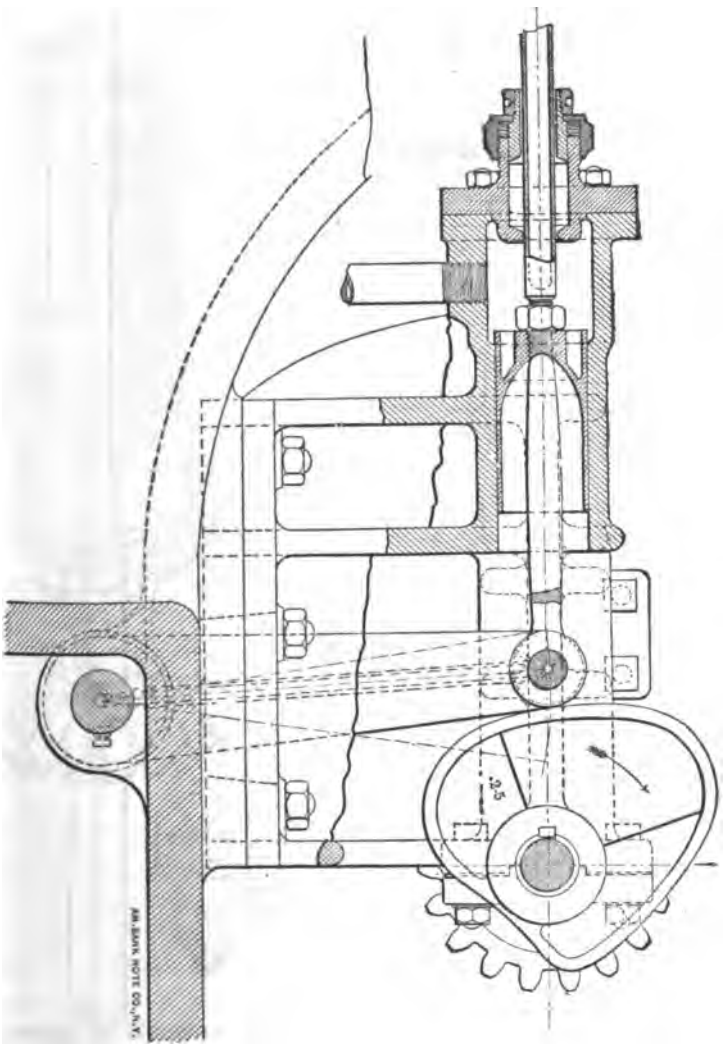

FIG. 34.

the theoretical that is obtained by carrying the expansion to eleven-twelfths of the stroke, with two per cent of waste room, as given by the cam.

In the first of these diagrams, the terminal pressure is 8.75

Digitized by Google

pounds, the number of expansions is 18.28, and the proportions of the cylinders are 1 and 4.3. In the second diagram, the

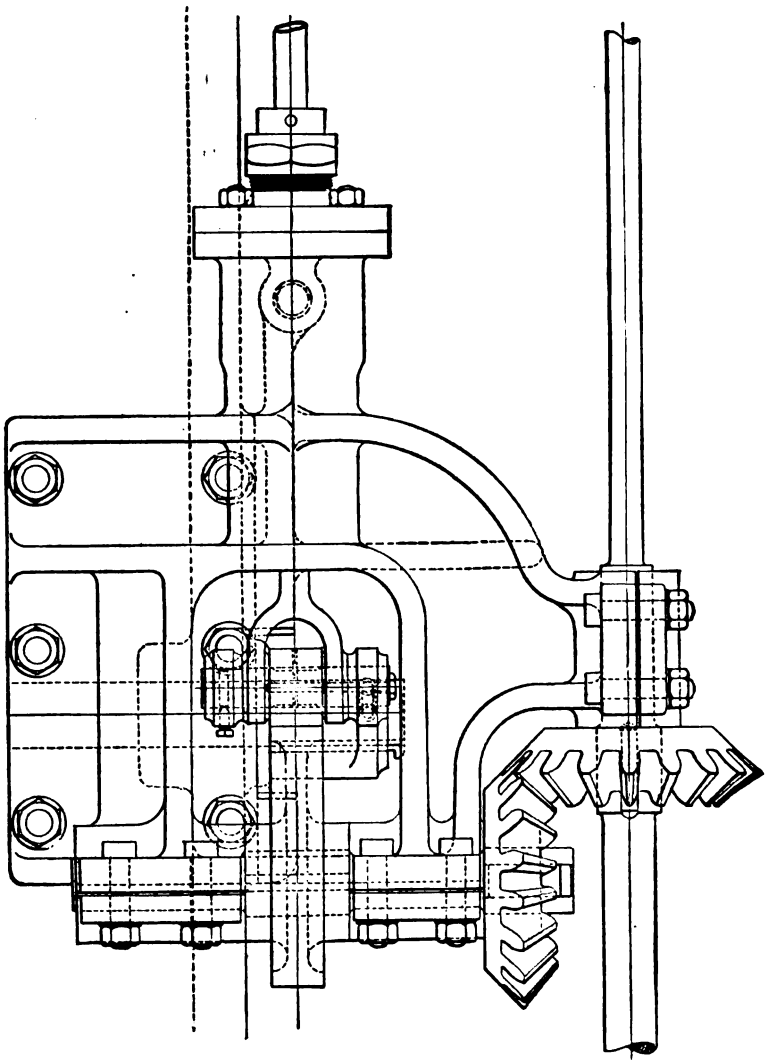

FIG. 35.

terminal pressure is 10 pounds, the number of expansions is 16, and the proportions of the cylinders are 1, 2.54, and 6.4.

By giving to the exhaust the lap that is shown in the diagrams taken by Professor Denton, the number of expansions is

Digitized by Google

increased, in the compound diagrams, to 20.6, and in the triple-expansion diagrams to 18, which are, respectively, 82.4 per cent. and 77 per cent. of the theoretical. This is the real capacity of this system. The gain is, in the later cut-off, 77

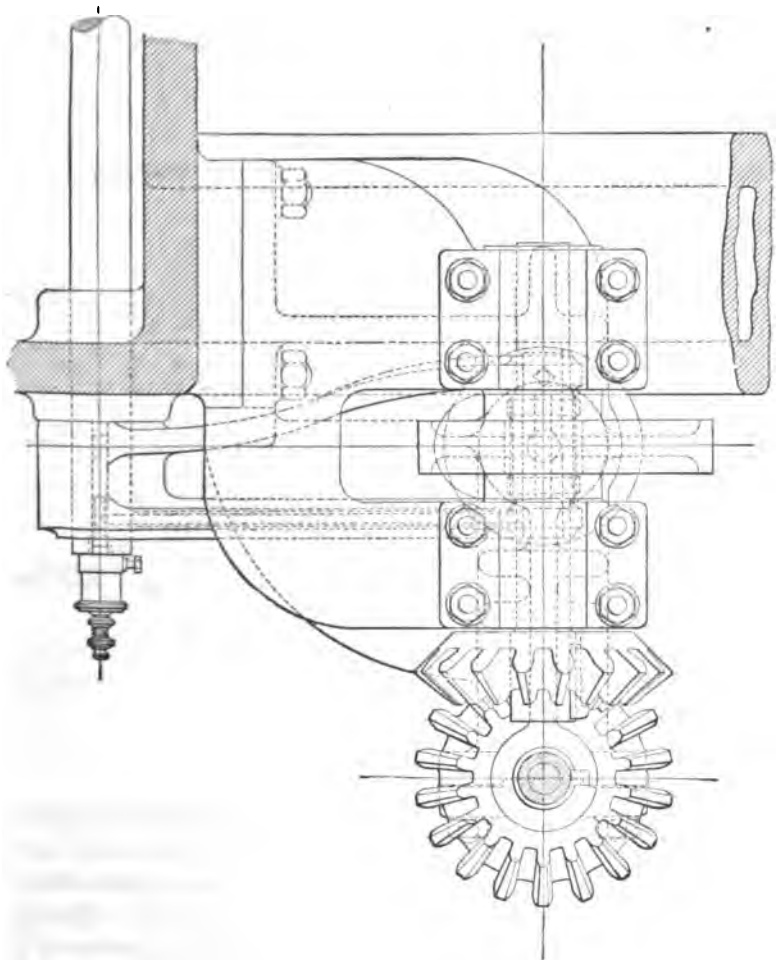

FIG. 36.

per cent. of the theoretical expansion, in place of 38 per cent., and in the earlier cut-off 82.4 per cent., in place of 34 per cent.

The theoretical compression curves (*D*) are shown on these diagrams. These cannot be approximated in practice, because the condensing point in the temperature of the steam rises with the compression. These curves have no effect on the expansion.

Digitized by Google

Having thus described its uses, I will now proceed to a description of the cam. Its form and arrangement are shown in the accompanying views. (Figs. 34 to 36.) Its outline may be varied, so as to cut off at any fixed point, up to three-fourths of the stroke. Two diagrams are exhibited, one showing a cam cutting off at two-tenths of the stroke (Fig. 37), and the other a

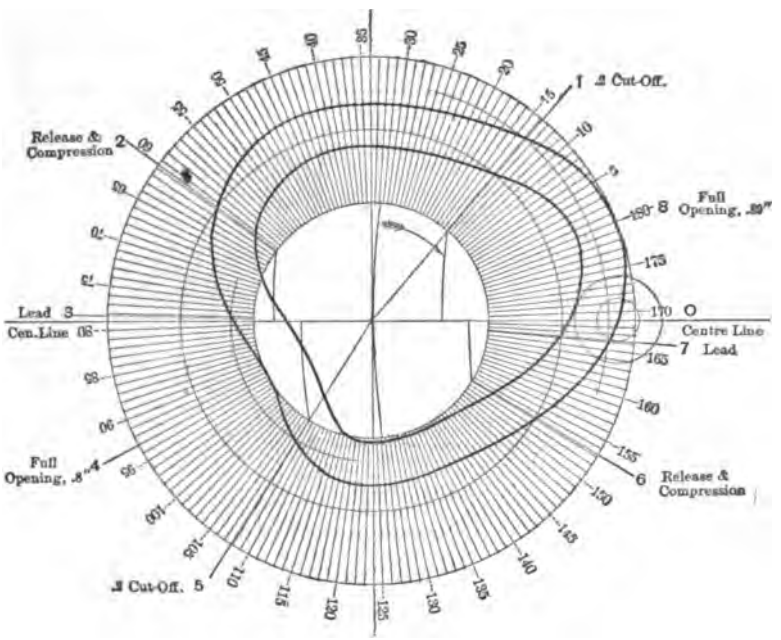

FIG. 37.

cam cutting off at four-tenths of the stroke (Fig. 38), both having a throw of five inches. On these diagrams, the outer cam is the real or ideal cam, passing through the axis of the roller, as shown. The description refers to this cam only. The inner cam is the working cam, impinging against the surface of the roller. The manner in which it is produced will be explained at the conclusion of this paper.

The cam revolves in the direction indicated by the arrow. The outer circle is the path of the highest point, the inner circle the path of the lowest point, the intermediate circle the path of the points of release and compression, and the short arcs are the paths of the points of admission and cut-off. The

Digitized by Google

events numbered one to eight; namely, admission, full opening, cut-off, and release and compression, on the forward and backward strokes, succeed one another, as these points come to coincide with the axis of the roller.

The line on the cam in front of the arrow (Fig. 34) is the centre line. The cam is set by bringing this line to coincide with the crank. The line at right angles with the centre line is used, in connection with the latter, to centre the cam in the lathe for boring. The figures indicate the point of cut-off and the throw. All these are cast, in relief, on both sides of the cam.

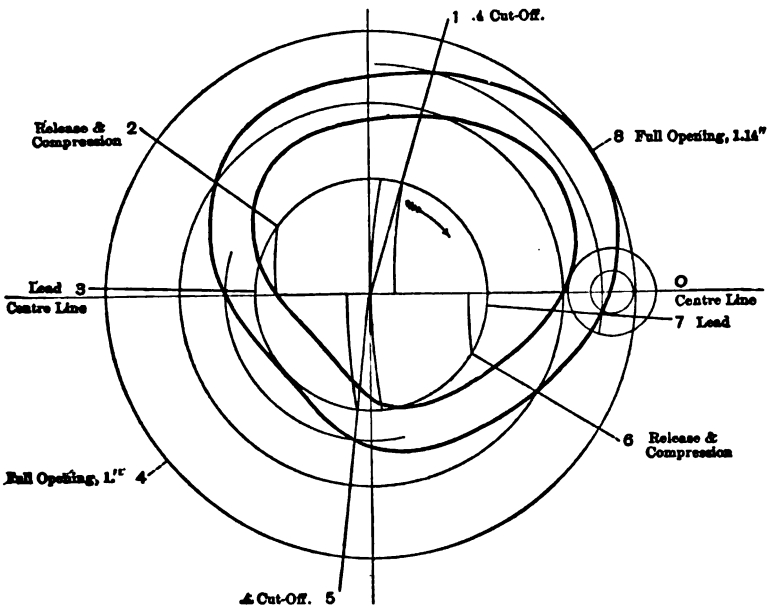

FIG. 33.

The cam is set on the shaft either way, as the engine is to be run forward or backward.

The cam is held in position by a hollow key fitting the shaft. These keys are made by boring a steel block of suitable form, and parting it into six keys. Their hold is absolutely firm. In the construction shown, the hollow key is, for convenience, placed in the gear. By this means the lead of the cam is made capable of adjustment.

The roller is carried at the end of a rocker-arm, and is lubricated by grease, fed from the cup set in the end of the rocker-

Digitized by Google

shaft, and rising through a small steel tube cast in the straight arm, as shown. It is held to the face of the cam by an elastic pressure, steam or, preferably, compressed air, which in vertical engines is assisted by gravity. The fluid elastic pressure has these points of advantage over a spring: it is practically without mass or weight; it will not break; if connected with a chamber of sufficient capacity, it is uniform, or nearly so, through the stroke; and it can be adjusted to requirements. This pressure is applied by means of a light piston, through a thrust-rod bearing on the end of the valve stem, the piston being located in the line of the valve connection, which is a direct line, as shown.

The profile or working face of the cam is the important thing. This is developed in the following manner: The circle is divided into one hundred and eighty parts, of two degrees each. The time occupied by the cam in rotating through one of these parts or intervals is taken as the unit interval of time, and is designated as *A*. The duration of this interval varies with the rotative speed of the engine. At eighty revolutions per minute, it is one two-hundred and fortieth of a second. At three hundred revolutions per minute, it is one nine-hundredth of a second.

The following table shows the radial velocities and movements during each one of these intervals imparted by a cam of five inches throw, and cutting off at two-tenths of the stroke. The table commences at the highest point of the cam, the point of full opening for admission at the back end of the cylinder, and the intervals are numbered from this point, as shown on the diagram.

The first column, marked *B*, gives the radial velocities, per unit interval of time, *A*, which are imparted, +, or are arrested, −, during each interval, *A*.

The second column, marked *C*, gives the radial velocities, per unit interval of time, *A*, which are reached at the termination of each interval, *A*.

The third column, marked *D*, gives the radial motion which takes place during each interval, *A*.

The fourth column, marked *E*, gives the sum of the radial motions, or the total displacement, from the commencement of the throw to the termination of each interval, *A*.

Digitized by Google

TABLE GIVING THE ELEMENTS OF A PORTER CAM OF 5 INCHES THROW, AND CUTTING OFF AT .2 OF THE STROKE.

FORWARD THROW, in which acceleration is produced by the elastic pressure, and retardation is produced by the Cam.

A. *Time.* Number of interval.	*B.* Radial acceleration + or retardation −.	*C.* Radial velocity attained.	*D.* Radial motion during interval.	*E.* Total radial displacement.
	Inches.	Inches.	Inches.	Inches.
1	+.011	.011	.0055	.0055
2	.011	.022	.0165	.0220
3	.011	.033	.0275	.0495
4	.011	.044	.0385	.0880
5	.011	.055	.0495	.1375
6	.010	.065	.0600	.1975
7	.009	.074	.0695	.2670
8	.008	.082	.0780	.3450
9	.007	.089	.0855	.4305
10	.005	.094	.0915	.5220
11	.003	.097	.0955	.6175
12	.001	.098	.0975	.7150
13	−.001	.097	.0975	.8125
14	.003	.094	.0955	.9080
15	.005	.089	.0915	.9995
16	.007	.082	.0855	1.0850
17	.008	.074	.0780	1.1630
18	.008	.066	.0700	1.2330
19	.007	.059	.0625	1.2955
20	.007	.052	.0555	1.3510
21	.006	.046	.0490	1.4000
22	.006	.040	.0430	1.4430
23	.005	.035	.0375	1.4805
24	.005	.030	.0325	1.5130
25	.005	.025	.0275	1.5405
26	.004	.021	.0230	1.5635
27	.004	.017	.0190	1.5825
28	.004	.013	.0150	1.5975
29	.003	.010	.0115	1.6090
30	.003	.007	.0085	1.6175
31	.002	.005	.0060	1.6235
32	.002	.003	.0040	1.6275
33	.001	.002	.0025	1.6300
34	.001	.001	.0015	1.6315
35	.001	.000	.0005	1.6320
36	.000	.000	.0000	1.6320
37	+.001	.001	.0005	1.6325
38	.001	.002	.0015	1.6340
39	.002	.004	.0030	1.6370
40	.002	.006	.0050	1.6420
41	.002	.008	.0070	1.6490
42	.002	.010	.0090	1.6580
43	.002	.012	.0110	1.6690
44	.003	.015	.0135	1.6825
45	.003	.018	.0165	1.6990
46	.003	.021	.0195	1.7185
47	.003	.024	.0225	1.7410
48	.004	.028	.0260	1.7670
49	.004	.032	.0300	1.7970
50	.004	.036	.0340	1.8310

Digitized by Google

TABLE, *Continued.*—FORWARD THROW.

A. *Time.* Number of interval.	*B.* Radial acceleration + or retardation −.	*C.* Radial velocity attained.	*D.* Radial motion during interval.	*E.* Total radial displacement.
	Inches.	Inches.	Inches.	Inches.
51	.005	.041	.0385	1.8695
52	.005	.046	.0485	1.9180
53	.005	.051	.0485	1.9615
54	.005	.056	.0535	2.0150
55	.004	.060	.0580	2.0730
56	.004	.064	.0620	2.1350
57	.004	.068	.0660	2.2010
58	.004	.072	.0700	2.2710
59	.004	.076	.0740	2.3450
60	.003	.079	.0775	2.4225
61	.003	.082	.0805	2.5030
62	.003	.085	.0835	2.5865
63	.003	.088	.0865	2.6730
64	.003	.091	.0895	2.7625
65	.003	.094	.0925	2.8550
66	.002	.096	.0950	2.9500
67	.002	.098	.0970	3.0470
68	.002	.100	.0990	3.1460
69	.002	.102	.1010	3.2470
70	.002	.104	.1030	3.3500
71	.001	.105	.1045	3.4545
72	.001	.106	.1055	3.5600
73	.001	.107	.1065	3.6665
74	.000	.107	.1070	3.7735
75	.000	.107	.1070	3.8805
76	−.002	.105	.1060	3.9865
77	.003	.102	.1035	4.0900
78	.004	.098	.1000	4.1900
79	.004	.094	.0960	4.2860
80	.005	.089	.0915	4.3775
81	.005	.084	.0865	4.4640
82	.006	.078	.0810	4.5450
83	.006	.072	.0750	4.6200
84	.006	.066	.0690	4.6890
85	.006	.060	.0630	4.7520
86	.007	.053	.0565	4.8085
87	.007	.046	.0495	4.8580
88	.007	.039	.0425	4.9005
89	.007	.032	.0355	4.9360
90	.008	.024	.0280	4.9640
91	.008	.016	.0200	4.9840
92	.008	.008	.0120	4.9960
93	.008	.000	.0040	5.0000

Digitized by Google

TABLE, *Continued.*

BACKWARD THROW, in which acceleration is produced by the Cam, and retardation is produced by the elastic pressure.

A. *Time.* Number of interval.	*B.* Radial acceleration + or retardation −.	*C.* Radial velocity attained.	*D.* Radial motion during interval.	*E.* Total radial displacement.
	Inches.	Inches.	Inches.	Inches.
94	+ .008	.008	.0040	.0040
95	.008	.016	.0120	.0160
96	.008	.024	.0200	.0360
97	.008	.032	.0280	.0640
98	.007	.039	.0355	.0995
99	.007	.046	.0425	.1420
100	.007	.053	.0495	.1915
101	.007	.060	.0565	.2480
102	.006	.066	.0630	.3110
103	.006	.072	.0690	.3800
104	.006	.078	.0750	.4550
105	.006	.084	.0810	.5360
106	.005	.089	.0865	.6225
107	.004	.093	.0910	.7135
108	.002	.095	.0940	.8075
109	.000	.095	.0950	.9025
110	− .002	.093	.0940	.9965
111	.004	.089	.0910	1.0875
112	.006	.083	.0860	1.1735
113	.008	.075	.0790	1.2525
114	.009	.066	.0705	1.3230
115	.009	.057	.0615	1.3845
116	.008	.049	.0530	1.4375
117	.008	.041	.0450	1.4825
118	.007	.034	.0375	1.5200
119	.007	.027	.0305	1.5505
120	.006	.021	.0240	1.5745
121	.006	.015	.0180	1.5925
122	.005	.010	.0125	1.6050
123	.004	.006	.0080	1.6130
124	.003	.003	.0045	1.6175
125	.002	.001	.0020	1.6195
126	.001	.000	.0005	1.6200
127	.000	.000	.0000	1.6200
128	.000	.000	.0000	1.6200
129	.000	.000	.0000	1.6200
130	.000	.000	.0000	1.6200
131	.000	.000	.0000	1.6200
132	.000	.000	.0000	1.6200
133	+ .001	.001	.0005	1.6205
134	.001	.002	.0015	1.6220
135	.002	.004	.0030	1.6250
136	.002	.006	.0050	1.6300
137	.003	.009	.0075	1.6375
138	.003	.012	.0105	1.6480
139	.004	.016	.0140	1.6620
140	.004	.020	.0180	1.6800
141	.005	.025	.0225	1.7025
142	.005	.030	.0275	1.7300
143	.006	.036	.0330	1.7630
144	.006	.042	.0390	1.8020

Digitized by Google

TABLE, *Continued.*—BACKWARD THROW.

A. *Time.* Number of interval.	*B.* Radial acceleration + or retardation −.	*C.* Radial velocity attained.	*D.* Radial motion during interval.	*E.* Total radial displacement.
	Inches.	Inches.	Inches.	Inches.
145	.007	.049	.0455	1.8475
146	.007	.056	.0525	1.9000
147	.008	.064	.0600	1.9600
148	.008	.072	.0680	2.0280
149	.009	.081	.0765	2.1045
150	.008	.089	.0850	2.1895
151	.007	.096	.0925	2.2820
152	.006	.102	.0990	2.3810
153	.005	.107	.1045	2.4855
154	.005	.112	.1095	2.5950
155	.004	.116	.1140	2.7090
156	.004	.120	.1180	2.8270
157	.003	.123	.1215	2.9485
158	.003	.126	.1245	3.0730
159	.002	.128	.1270	3.2000
160	.001	.129	.1285	3.3285
161	.000	.129	.1290	3.4575
162	−.001	.128	.1285	3.5860
163	.002	.126	.1270	3.7130
164	.003	.123	.1245	3.8375
165	.004	.119	.1210	3.9585
166	.005	.114	.1165	4.0750
167	.005	.109	.1115	4.1865
168	.005	.104	.1065	4.2930
169	.005	.099	.1015	4.3945
170	.006	.093	.0960	4.4905
171	.007	.086	.0895	4.5800
172	.007	.079	.0825	4.6625
173	.008	.071	.0750	4.7375
174	.008	.063	.0670	4.8045
175	.009	.054	.0585	4.8630
176	.010	.044	.0490	4.9120
177	.011	.033	.0385	4.9505
178	.011	.022	.0275	4.9780
179	.011	.011	.0165	4.9945
180	.011	.000	.0055	5.0000

NOTE.—Motion in the direction from the cylinder to the crank is termed forward motion, and motion in the direction from the crank to the cylinder is termed backward motion.

The force required to impart, or to arrest, radial motion in this manner is found by comparing the velocity imparted or arrested with the velocity imparted by gravity to falling bodies. This is the velocity that will be imparted to a body in any direction by a force equal to its weight. The force varies directly as the velocity imparted in a given time.

In one second of time, gravity imparts to a falling body a

Digitized by Google

velocity of 32,166 feet, or 386 inches, per second. The velocity *per second* varies directly as the time. Thus:

In 1 second, the velocity per second imparted is	386 ins.
" .1 " " " " " " "	38.6 ins.
" .01 " " " " " " "	3.86 ins.

But if, instead of one second, we take any number of seconds, or any fraction of a second, as the unit interval of time, then the velocity *per such interval* imparted by gravity varies from the velocity per second imparted in one second as the square of such interval. Thus:

In 1 second, the velocity per second imparted is	386 ins.
" .1 " " " " .1 of a second imparted is....	3.86 ins.
" .01 " " " " .01 " " " " ...	.0386 in.

This is obvious.

Now in any case, the velocity imparted to a body in any interval of time whatever is expressed as the velocity per such interval, or as double the distance moved through during such interval, which distance varies as the square of the time.

In comparing this velocity, therefore, with the velocity imparted by gravity, we must compare it with the velocity, *per such interval*, that gravity would impart during the interval, which, as above shown, varies as the square of the interval.

The application of this law in the present case is as follows: The cam of five inches throw may make, say, 180 revolutions per minute, or three revolutions per second. The duration of each unit interval of time, A, is, then, $\frac{1}{540}$ of a second. In this interval, gravity will impart to a falling body a velocity, *per* $\frac{1}{540}$ *of a second*, of .001327 inch +; for

$$386 \div 540^2 = .001327+.$$

At the above rate of rotation, the *greatest* velocity per unit interval of time, A, that is imparted or arrested by this cam during such interval, is .011 of an inch. The force required to impart or arrest this velocity is, therefore, 8.31 times the weight of the valves and connections; for

$$.011 \div .001327 = 8.31.$$

Digitized by Google

The power required in different cases will vary from the above amount, directly as the throw of the cam, and as the square of the revolutions per minute. Thus the force necessary to overcome the inertia of the parts actuated by the cam is always accurately known, for every point of its revolution.

It will be observed, that in every case the transition from acceleration to retardation, and *vice versâ*, as well as that from one degree of acceleration or of retardation to another, is made in a very gradual manner. This insures to the cam an action as smooth as that of an eccentric.

It will also be observed, that in the construction of this cam application is made of the law of crank action, that on each reversal of reciprocating motion retardation in one direction passes, at its maximum, into acceleration in the opposite direction, at *its* maximum, the two being equal to each other.

Thus, at the commencement of the table, acceleration begins abruptly, at .011 inch per unit interval of time A, in each interval A. At the end of the table, it will be seen that retardation terminates at the same rate. So also at the opposite dead point, retardation and acceleration are equal, being each .008 inch. The difference between the two approximates to the difference in piston velocity near the opposite centres which, with a connecting-rod six cranks in length, is forty per cent.

I may call attention to an interesting action of the steam, assisting the cam. The piston valves are in an equilibrium of pressure when the ports are closed; but when one port is open for admission, there is a fall of the pressure against that valve, by the amount necessary to produce the current of steam. The full pressure being against the opposite valve produces a reaction tending to resist the opening movement. The valves are now being brought to rest; when the port is fully open the motion of the valves has been arrested entirely. The excess of pressure on the area of the opposite valve assists in bringing the valves to rest, and then also in putting them in motion in the reverse direction, so long as the port remains open. This reaction of the steam is strongest at the back end of the cylinder, the velocity of the piston and, therefore, that of the current of steam, being much more rapid at that end. This is also the point where the most rapid retardation and subsequent acceleration of the valve motion take place. The extreme force required to be exerted by the cam is, therefore, somewhat less

Digitized by Google

than appears from the table; who much less has yet to be ascertained by experiment.

The manner in which these cams are produced is as follows: A master cam is cut in a dividing machine to the figures in the table. Working cams are cast in a chill very nearly to the correct form. They are then ground with a wheel, the diameter of which is about the same as that of the roller. The carriage supporting the spindle of the grinding wheel has a cross traverse in the lathe, and is made to follow the contour of the master cam, which is keyed on the mandrel on which the cam is ground, and so revolves with it between the lathe centres. In this way the cams are finished expeditiously and accurately.

The roller and pin being also hardened, great durability is assured. In case of wear, these parts can be renewed readily and at trifling cost. Wear does not occasion lost motion, the thrust being always in one direction; but if considerable, it will change the functioning of the valves somewhat.

Digitized by Google

DCXVII.*

DESCRIPTION OF AN IMPROVED CENTRIFUGAL GOVERNOR AND VALVE.

BY CHARLES T. PORTER, MONTCLAIR, N. J.

(Honorary Member of the Society.)

THIS governor needs but little description. The illustrations make its construction sufficiently clear (Figs. 39 and 40). This is such, that the radial lines on which the opposing central forces act are coincident. Its action is frictionless. This permits a closer approach to isochronous adjustment than is practicable in a governor, the action of which involves the overcoming of any resistance from friction.

The improvement in the valve consists in balancing the stem. So far as I am aware, this has not heretofore been done. It is obvious that close regulation cannot be had. with a pressure on the area of the stem varying from 150 pounds on the square inch to 0, according as the valve is wide open or closed.

---

* Presented at the New York meeting (December, 1894) of the American Society of Mechanical Engineers, and forming part of Vol. XVI. of the *Transactions*.

Digitized by Google

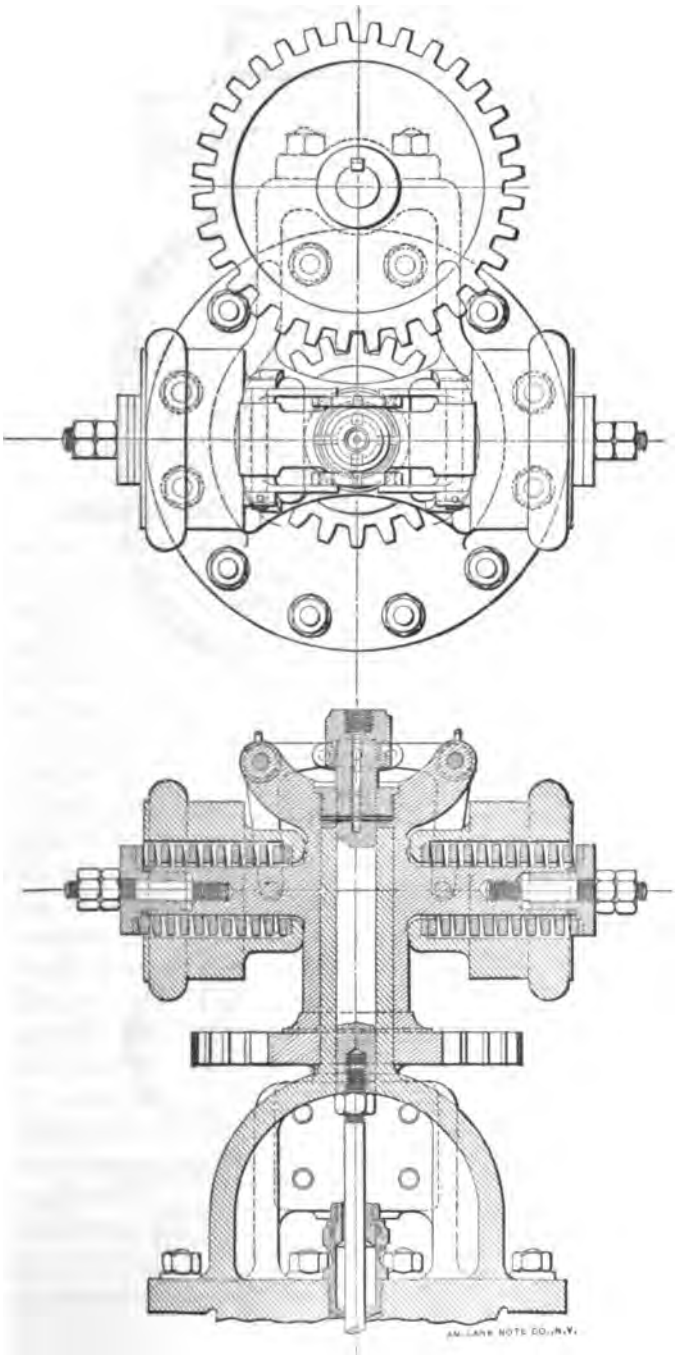

FIG. 89.

Digitized by Google

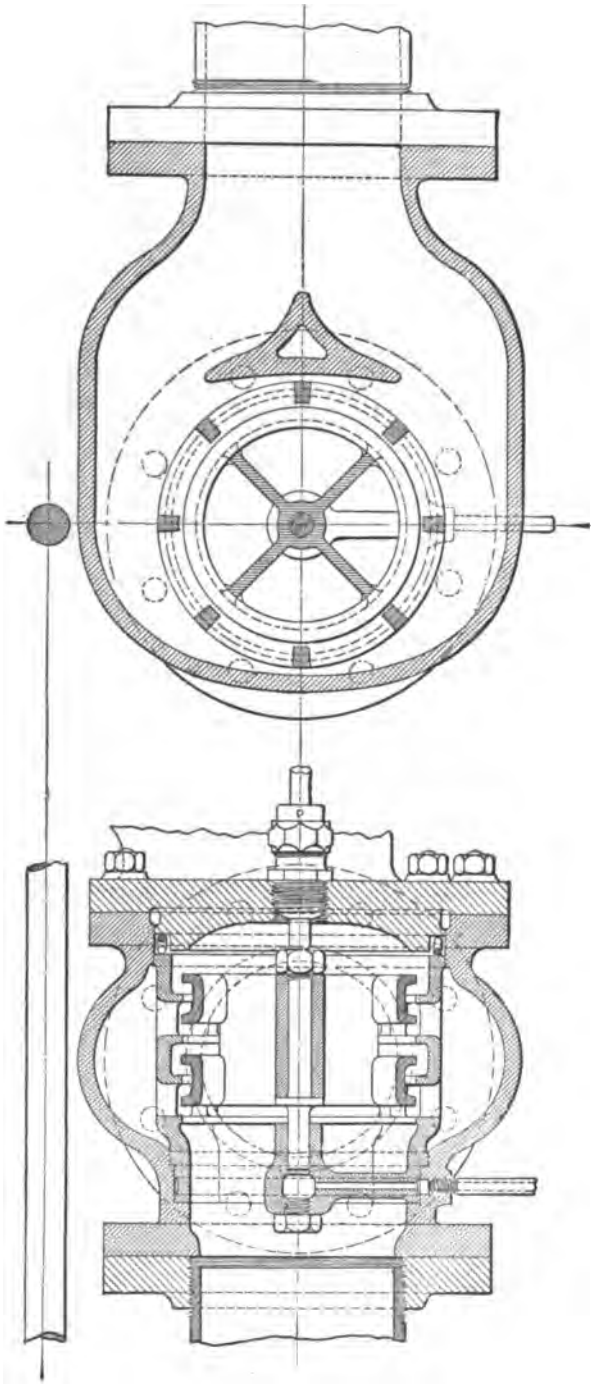

FIG. 40.

Digitized by Google

DCXVIII.*

DESCRIPTION OF IMPROVED FORMS OF STEAM-SEPARATOR, STEAM-JACKET, AND RE-HEATER.

BY CHARLES T. PORTER, MONTCLAIR, N. J.
(Honorary Member of the Society.)

ALTHOUGH these are entirely independent, yet they are essential to one another, and contribute to one result. They may therefore be properly described together.

One purpose served by the cam is, as has been shown, to combine the advantage from expansion continued practically to the end of the stroke, with that from very small waste room, at any desired point of cut-off. We have seen that we cannot have a reasonable approximation in practice to theoretical expansion without this combination.

But we cannot employ very small waste room with any ordinary construction, on account of water in the cylinder, especially that which is condensed in warming up. Using equilibrium valves, the engine would inevitably be broken down on the first revolution. Relief valves in the heads are an objectionable, and with very small waste room an inadequate, means of escape from this dilemma.

It is required to make an engine that shall be absolutely safe from break-down or injury in starting, either through water in the cylinder, or through seizure of the valves by expanding more rapidly than their seats; and this, no matter how small the waste room, or how closely the valves are fitted, or how suddenly or at what speed the engine may be started. This is the problem, the solution of which I have now to present.

The means employed for this purpose are the separator and the all-embracing jacket open to the boiler.

The following description of these features, and of the steam

* Presented at the New York meeting (December, 1894) of the American Society of Mechanical Engineers, and forming part of Vol. XVI. of the *Transactions*.

Digitized by Google

distribution in these engines, is illustrated in the accompanying views. These represent a vertical, tandem-compound engine, of 600 horse-power, with condensation cylinders 18″ and 36″ diameter, working steam of 150 pounds boiler pressure. One cam of 5″ throw operates the valves of both cylinders. The steam is cut off at .2 of the stroke in each cylinder, and about twenty expansions are realized.

Fig. 41 shows front and side elevations, with piping and reheater, of an engine of 24″ stroke, making 180 revolutions per minute.

Fig. 42 shows an exterior view, two vertical sections, one on the centre line, and one through the ports and valve-seats, and a cross-section through the upper port, of the high-pressure cylinder.

Figs. 43 and 44 show corresponding views of the low-pressure cylinder. These detail figures show a stroke of 36″, being that of an engine making 125 revolutions per minute.

Fig. 45 shows a longitudinal section through ports and valve-seats, with valves in the position giving full opening into the upper port for admission of the steam, and wide open exhaust out of the lower port. One of the four valves is shown in section.

Fig. 46 represents the upper end of a smaller high-pressure cylinder.

Fig. 47 represents the reheater, externally and in section, without lagging, and with plan views of the tube-plates.

Fig. 48 shows, on an enlarged scale, the interlocking attachment to the starting-valve, seen in Fig. 41.

The steam-pipe is run in such a manner that the direct course of the steam is into the jacket. To reach the pipe leading to the cylinder, it has to turn the square angle of a tee. (Fig. 41.) Water will not do this, but will maintain its direct line of motion, the pipe being continued of full size for a short distance beyond the tee. This simple separator has these two advantages over all forms of separator in use: the deflection of the steam in the tee is sharper, and the water has a place to go. Its efficiency is made quite complete by running the pipe in the manner shown. The water coming over with the steam is, by its momentum in the horizontal pipe, carried to that side of the vertical pipe which is opposite to the outlet of the tee, so even the minutest particles escape deflection, and the steam passes

Digitized by Google

Digitized by Google

Digitized by Google

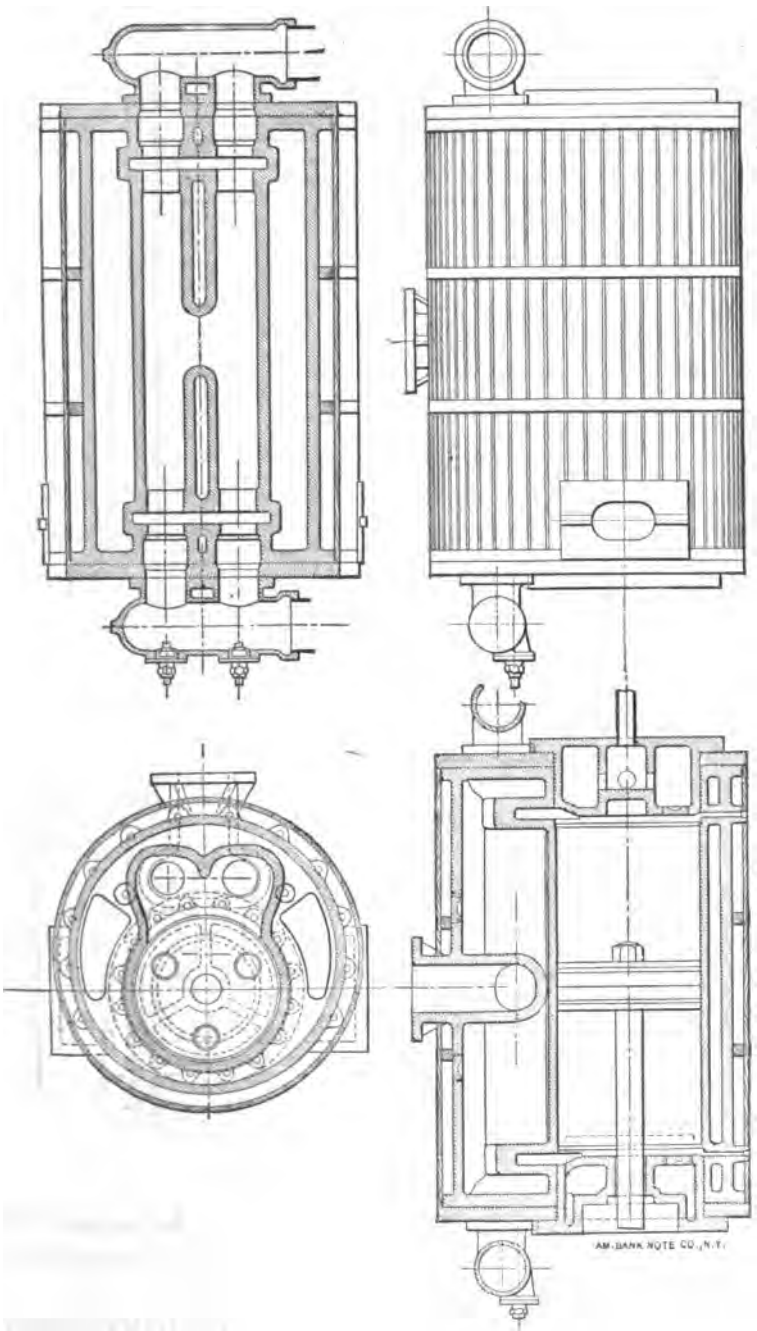

FIG. 42.

Digitized by Google

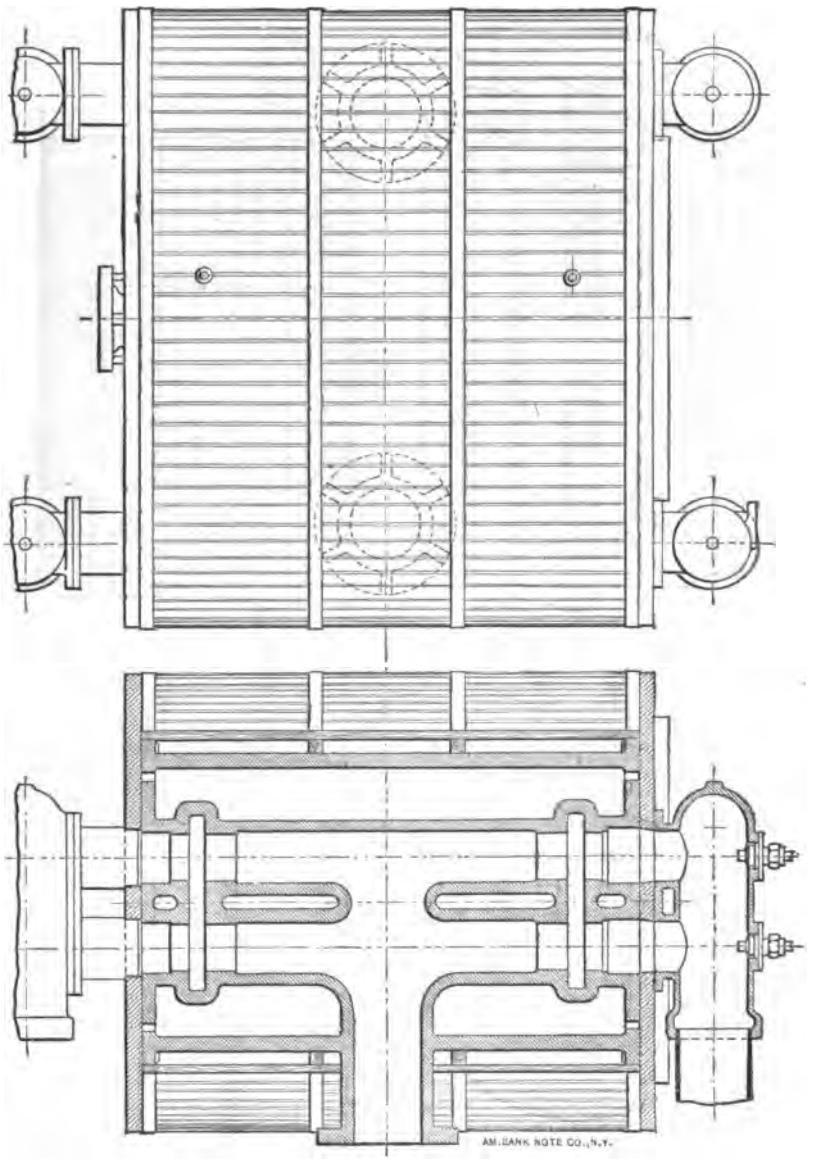

FIG. 43.

on to the throttle quite dry, in a condition to be superheated by the reduction of pressure in passing through this regulating valve.

The steam-jacket is made to embrace not only the cylinder

Digitized by Google

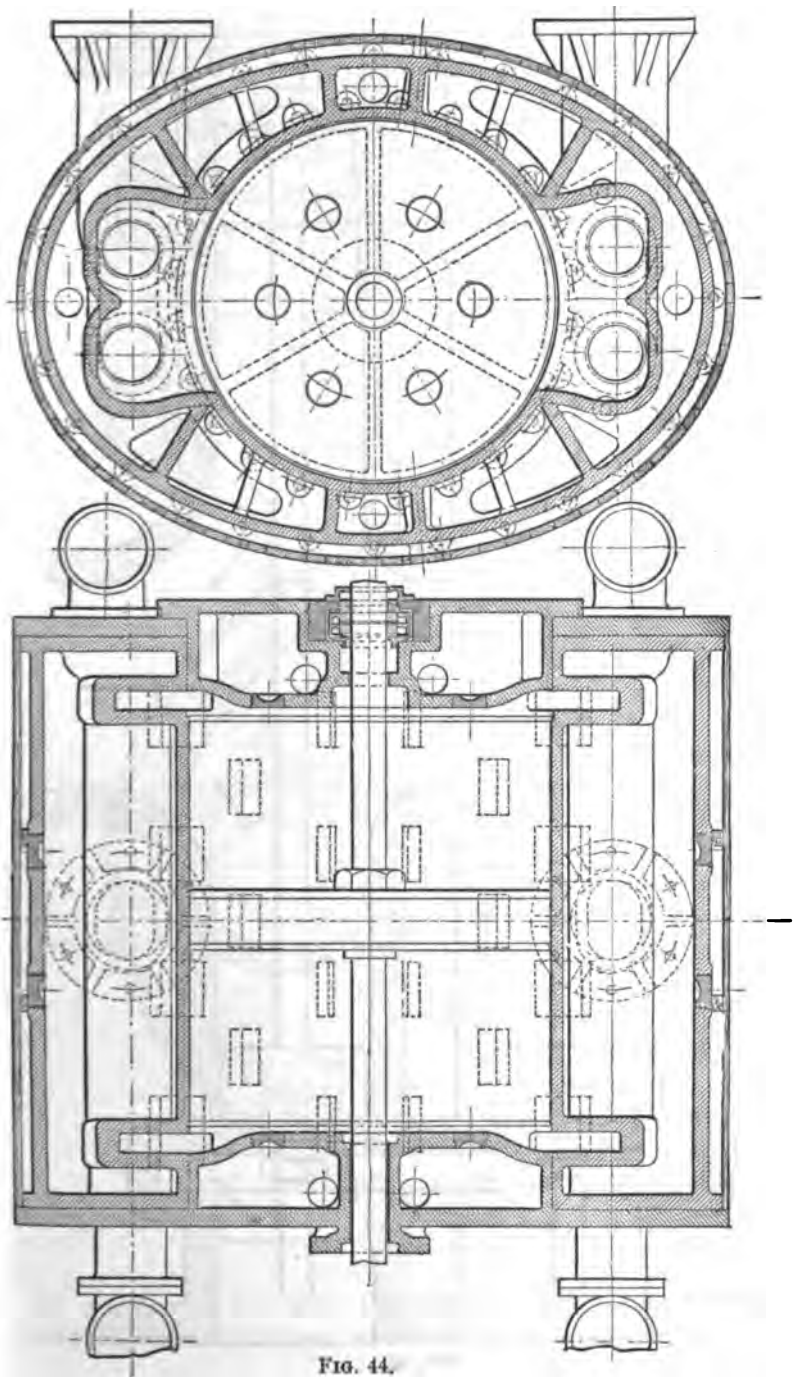

FIG. 44.

Digitized by Google

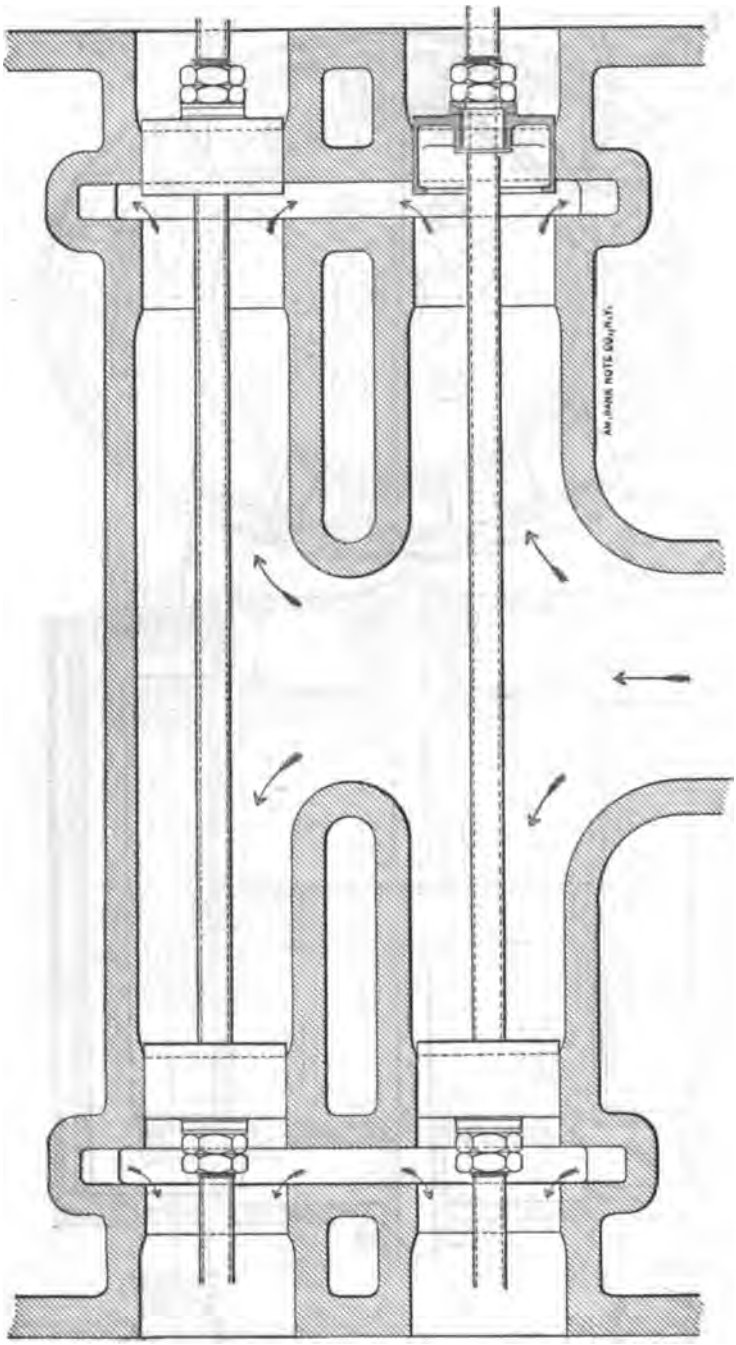

Fig. 45.

Digitized by Google

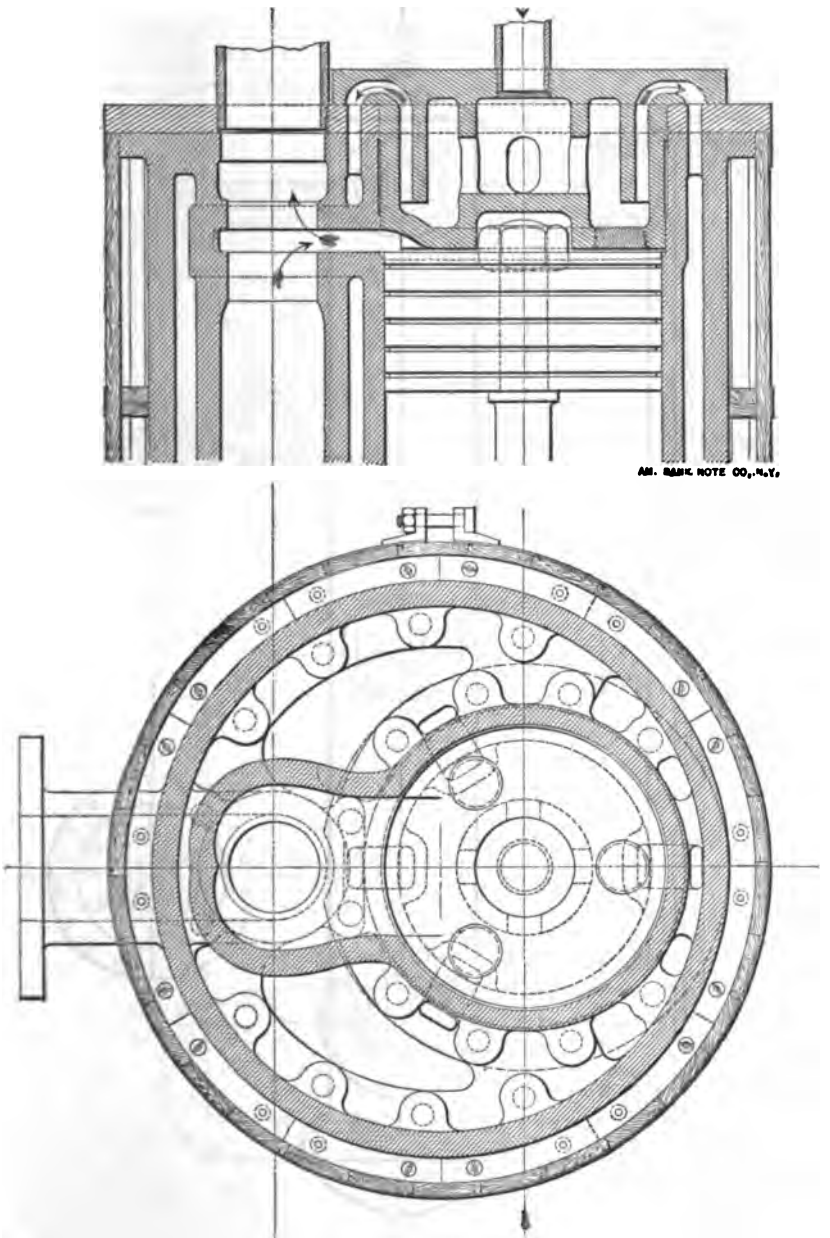

FIG. 46.

and its heads, but also the ports, the valve-seats and the internal steam passages, which latter are quite separate from

Digitized by Google

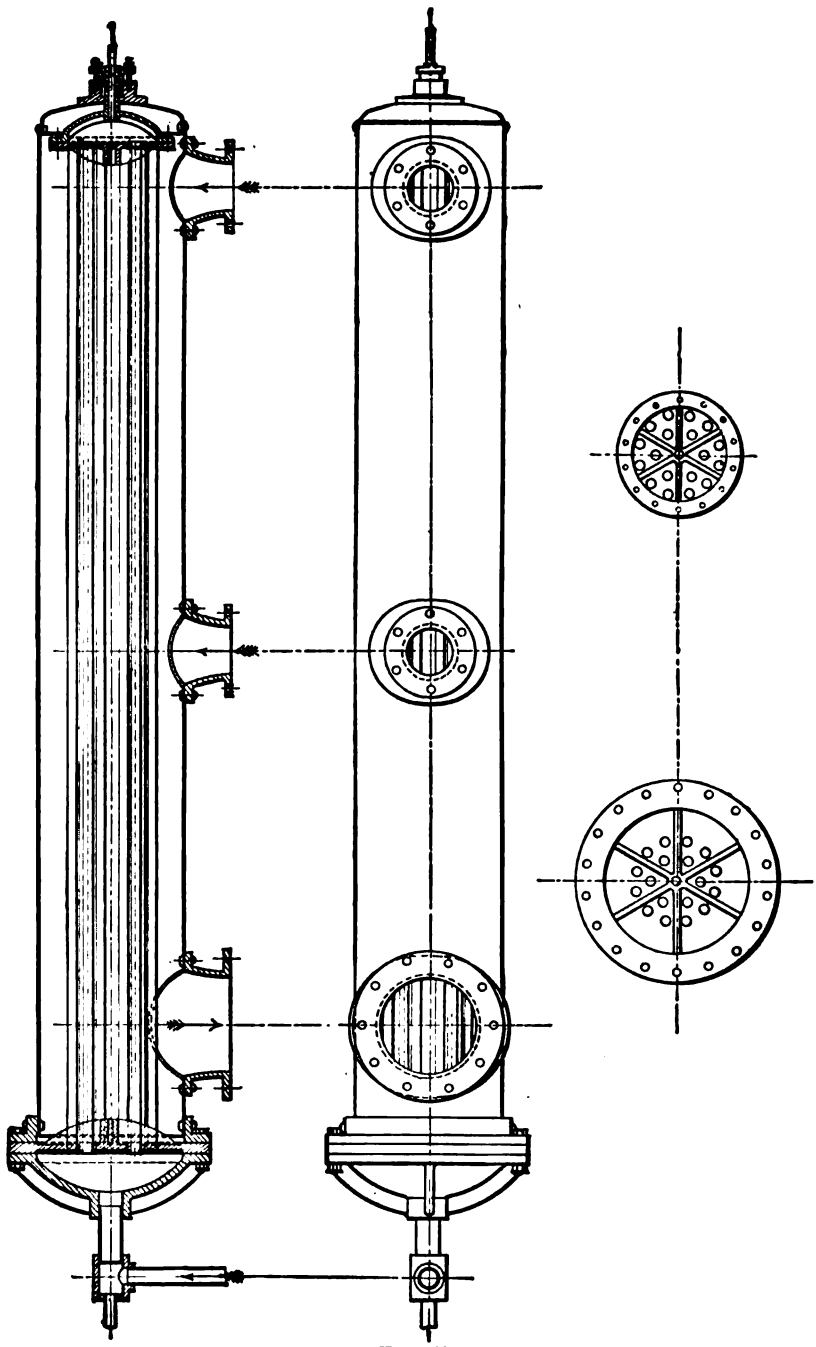

FIG. 47.

Digitized by Google

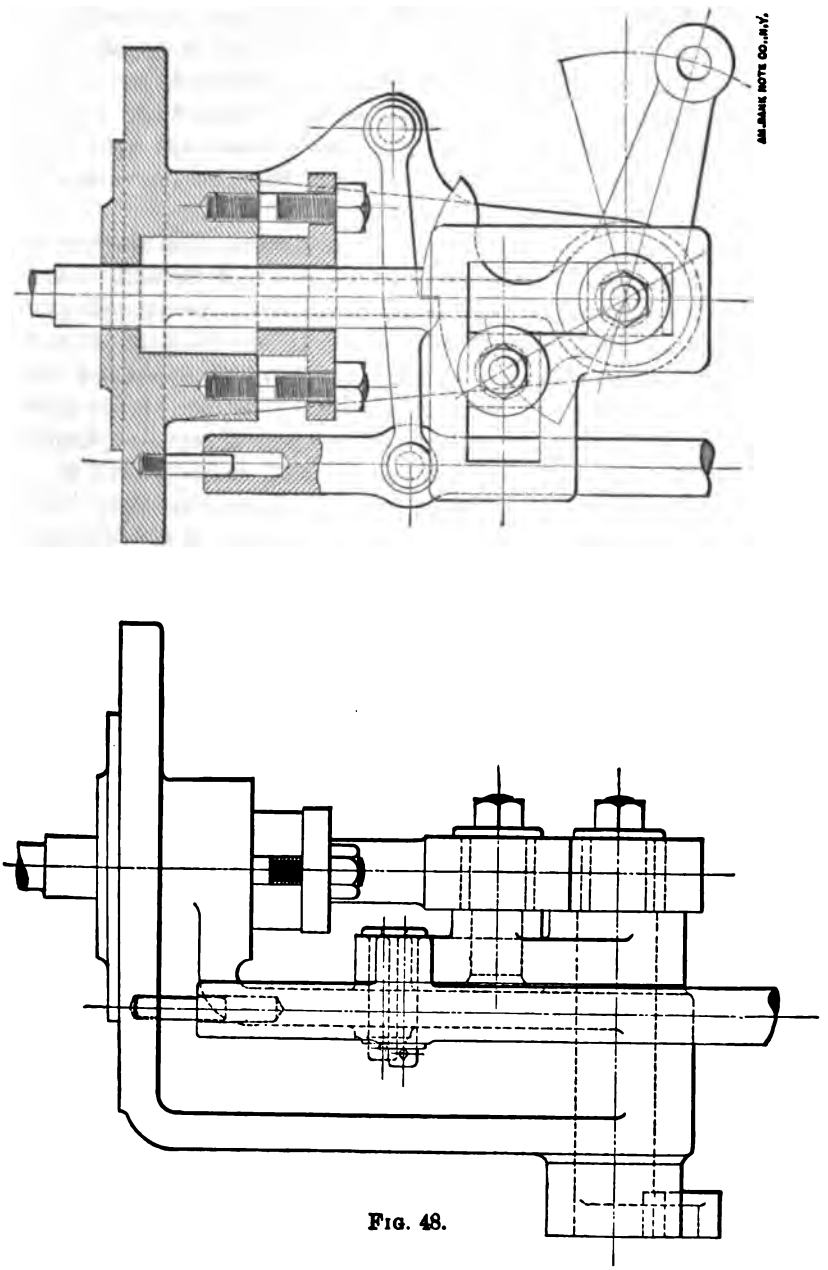

Fig. 48.

the cylinder. (Figs. 42, 43, and 44.) As soon as steam is admitted from the boiler to the pipe, it is also in the jacket. The

Digitized by Google

water formed in heating up the branch pipe, the throttle-valve and the starting-valve, is drained away by a small pipe, as shown in Fig. 41. A self-acting pump returns to the boiler the water formed in the jackets and pipes. Then, when the engine is to be started, the cylinder and valve-seats are already completely heated up, and the opening of the starting-valve admits only dry steam to the cylinder.

Lest, either through accident or design, the starting-valve should be open at the time when steam is turned on to the pipes, or should, after this has been done, be opened prematurely, an interlocking attachment is provided, which is disengaged automatically, either by the lineal expansion of the cylinders, or by the pressure of steam in one of the jackets, and which makes it impossible to open this valve until the cylinders have become fully warmed up. (Figs. 41 and 48.)

It will be observed that in this engine the ordinary function of the steam-jacket, of reducing the amount of condensation of the steam as it enters the cylinder, is made subordinate to another use, namely, that of making a piston-valve engine with very small waste room, and running at high speed, entirely secure from accident, especially in starting, either through water or unequal expansion. Still, the ordinary use of the jacket becomes in this engine especially advantageous, because, the full boiler temperature being maintained in the jacket of the high-pressure cylinder, and the steam admitted to this cylinder having by throttling been reduced in pressure, and also superheated, the jacket must be very efficient in preventing cylinder condensation. All the conditions are most favorable to this efficiency. The case is, as far as possible, removed from the ordinary one, in which the heat imparted by the jacket is insufficient often to evaporate the water entrained with the entering steam, and in order to prevent cylinder condensation the temperature of the internal surfaces must be brought up from that of the exhaust very nearly to that of the steam in the boiler. It is no wonder that, under such conditions, the steam-jacket should be a failure, that a great amount of steam should be condensed in it, and be condensed to little purpose. This is precisely what we ought to look for. But, obviously, such failure can raise no presumption against the efficiency of the system here described.

The jackets impart heat, also, internally, to the exhaust.

Digitized by Google

They thus assist the reheaters; and their combined effect must be, that the steam will enter the second and third cylinders, especially the latter, not only dry, but more or less superheated. Finally, the steam in the latter cylinder will be dry at the end of the stroke. This is a point of great importance, as then the exhaust will carry away into the condenser only an inappreciable amount of heat abstracted from the internal surfaces. It was pointed out by Mr. Isherwood, more than thirty years ago, that dry steam can absorb but little heat in this way; that it is water that does the mischief by its evaporation, absorbing from these surfaces the heat of vaporization, until the temperature of the exhaust has penetrated the metal deeply. It may, then, be confidently expected that in this engine the indicator will account for very nearly all the water supplied to the boilers, except that which is returned from the jackets, the amount of which will be known; and that this latter amount, over and above that formed in warming up and in providing heat to be converted into work, will be extremely small. Pains have been taken to avoid neutralizing the effect of the jacket, through exposing the exterior surfaces of the cylinder, or the live steam passages, to the refrigerating influence of the exhaust blast, which in the case of the high-pressure cylinder is most prejudicial to economy.

I have long been impressed with the conviction that the efficiency of the steam-jacket must be seriously impaired by the accumulation of air, which is abandoned by the steam as it is condensed, and which there is commonly no way to get rid of. In this engine, pains are taken to remove the abandoned air from the jackets and heads. For this purpose, a continuous current is maintained through these into the reheater, and the air is permitted to escape at the end of the course. Fig. 46 is introduced especially to illustrate the construction by which this current is established in a vertical engine. This figure shows only the upper end of a high-pressure cylinder. One of small size is selected, in order to exhibit the passages from head to jacket on a larger scale. These passages are similar in all the heads. By an error, they were omitted from the larger cylinder sections. In this figure, the upper view is a vertical section through the upper end of the cylinder, valve-seats, port, jacket and head. The lower view is a cross-section through the lower port, showing an inside plan of the cylinder end,

Digitized by Google

jacket and head, with the piston removed. The current from the boiler enters the head through the central pipe. This pipe is made of good size, and its area is maintained in the passages, in order that the current shall not occasion an appreciable fall of pressure. In the upper head of each cylinder the passages extend downward, as shown, to draw off the water. The current sweeps through every part of the heads and jackets, taking the air with it. From the lower head of the low-pressure cylinder it is taken by two short vertical pipes into a horizontal pipe, which leads to the reheater, in the manner shown in Fig. 47. The horizontal pipe terminates in a tee, from which the water is conveyed away, to be returned to the boiler, and the steam and air rise into the reheater tubes. In these the steam is condensed, and at the top air only remains, to be blown off through the quarter-inch pipe shown. The air should be blown into the feed water.

Reheaters frequently give trouble from the tubes coming to leak, the conditions being very trying. The construction shown in Fig. 47 is intended to obviate this defect. The lower tube plate is of cast iron, to have the same rate of expansion with the shell, and is ribbed to prevent deflection under the steam pressure. The upper tube-plate, of brass, and ribbed for the same purpose, is not connected with the shell. It is bolted to a concave cover, terminating in a stem, which passes through a stuffing-box into the open air, permitting free expansion and contraction of the tubes.

The capacity of the reheater shown, with that of the connecting steam passages, is eight times that of the low-pressure cylinder up to the point of cut-off, which, in the engine represented, is at .2 of the stroke. It contains sixty-six square feet of reheating surface.

The method by which, in this engine, very small waste room is made sufficient for the requirements of high speed may properly be described in this connection. The simple piston valve employed at each end of the cylinder is divided into two valves in cylinders of small diameter, and in larger cylinders into four valves, two on either side of the cylinder, as shown in Fig. 44. These are all connected by their rods, and move together as one valve. The steam is admitted between the valves, so that the rods are in tension. The valves are attached to the rods in such a manner that they are entirely free in their

Digitized by Google

seats. (See Fig. 45.) The advantage of this division will be seen at once. For example, the 36-inch cylinder shown is provided, at each end, with four valves, each 5.5 inches in diameter. Their combined circumferential opening, for admission and release (and the entire circumference is available for these purposes), is equal to that of a single valve twenty-two inches in diameter. This would require a port twenty-eight inches deep, and having nearly four times the area of these two ports, after deducting the valve areas in both cases. The depth of port required by them is a familiar objection to the employment of piston valves of large size. Also, the exhaust area opened by the 22-inch valve would be four times too great, that opened by the four 5.5-inch valves being sufficient. The admission and exhaust pipes are each divided into two, which is a great convenience, and the cylinder, ports, and jacket are brought into moderate compass and symmetrical form. It is evident that the least departure from simple valves, making a single opening for admission and a single opening for release of the steam, would render this division of the valves, and consequent great reduction of waste room, impracticable. This object can, therefore, be attained, without sacrifice of efficient steam distribution, only by the use of the cam.

Pains are taken to make this engine distinguished for the ready accessibility of the pistons and valves, as will be seen in the views here shown. Provision is also made for reboring the valve-seats to their original axis, should it ever be found necessary.

In the progress of steam-engine development two great improvements—high pressure and expansion through two or more cylinders—have come to us, and have found in existence no mechanical means adapted for turning their advantages to the best account, except the piston-valve. The eccentric and the variable cut-off were already in universal use, and so have necessarily been employed in connection with high pressure and multiple expansion, until there should be time to provide something better suited to their requirements. The singular unsuitableness of both these has been sufficiently shown. In the case of the eccentric, this is confessed by the various additional devices, more or less complicated, and multiple openings, which are resorted to, in the attempt to make it answer. No one will pretend that a single eccentric, pure and simple, will do at all;

Digitized by Google

but a single cam, pure and simple, meets all the demands. These contrivances for making the eccentric answer the requirements of high speed, high pressures and multiple expansion, generally involve the fatal defect of excessive waste room; and so engine builders have discovered that this amount of waste room is a good thing; being necessary, in order to avoid, in some degree, break-downs from water in the cylinder. In some cases, as I know, the waste room is for this latter purpose made larger than would otherwise be required. This is the present state of steam-engineering.

Expansion continued to the end of the stroke, with ample areas for admission and release, and small waste room, in connection with superior jacket and reheater efficiency, as these features are combined in this engine, present the conditions most favorable to economy. This statement will, doubtless, be generally accepted as correct. The advantages thus possessed will generally, as shown in the illustrations to this paper, enable the number of expansions to be got in two cylinders, for which three cylinders are now employed, and with even less loss from cylinder condensation; and will enable the extreme number of expansions that it is ever desirable to employ to be got advantageously in three cylinders, dispensing with the fourth cylinder altogether. They enable a higher standard of economy to be set throughout the entire range of engine construction, from non-condensing engines in which only from six to eight expansions are employed, up to engines in which expansion is continued to one-fortieth of the initial pressure, or from 200 pounds initial to five pounds terminal pressure. In view of what has already been done, under conditions comparatively unfavorable, can there be any doubt that, under the conditions here presented, a consumption not exceeding ten pounds is by these means attainable in regular work? I think not.

This system, as a whole, is now submitted to the judgment of engineers upon the claim that it enables the utmost economy to be reached of which the steam engine is capable, and that by the most simple means.

While the only practical service on which this system has yet been employed has been on a very small scale, on a pair of simple vertical engines of eight inches diameter of cylinder by six inches stroke, running at 300 revolutions per minute, it has so happened that every point has received a more searching test, and been

Digitized by Google

proved in a more conclusive manner, than it could be on any number of large engines making a fewer number of revolutions per minute. This was especially true of the point of safety in starting. Indeed, a test more trying could not be imagined. The engines were applied to drive a pump of novel construction, and had no fly-wheel. The pump chambers were connected by a by-pass pipe, to drain them when not in use. They were first started with the valve in this pipe open. They were intended to be regulated by a little Waters governor. The number of revolutions marked on this governor was entirely wrong, so that as speeded it did not regulate at all. The waste room was $3\frac{1}{3}$ per cent., the stroke being very short; and to get it down to this I had made the clearances only $\frac{1}{16}$ inch. When steam was admitted, the pistons leaped at once to a frightful velocity. It could not have been less than 600 revolutions per minute, producing excessive vertical vibration. There was no accident, nor sound, as of water, in the cylinders. It struck me that this unlooked-for test of the efficiency of the separator and jacket was of such a crucial nature that it ought to be repeated, and I improved every opportunity to do so. While experimenting with the pump, I must have repeated this test more than a score of times, without ever a thought of an accident. Of course, any other piston-valve engine would have been broken down by water, especially on the upper centre, at the first jump.

Unfortunately, the pump proved a failure. A friction brake-wheel was put in its place for continuing experimental work with the engine. When afterwards this was examined by Professor Denton, between the inertia of the wheel and the friction of the brake-blocks lying on its surface, the furious start had been rendered impossible. I started as sharply as I could do, but had to regret that on this point I could not show the Professor the wonderful demonstration that I had myself enjoyed.

I had made preparations to test these engines for steam consumption, but the failure of the pump rendered this impracticable. Two things, however, indicated extreme economy. The steam blown occasionally, while running, from the indicator-cocks seemed quite dry, only becoming visible after entering the atmosphere, and the expansion line always coincided with the hyperbolic curve quite to the end.

Digitized by Google

DISCUSSION.

Prof. C. B. Richards.—I have read Mr. Porter's papers with the greatest interest.

No one can examine them carefully without becoming impressed with the evidence they afford of the vast amount of study and labor which Mr. Porter has given to the design of the new engine he presents to the attention of the Society. The thoroughness with which every detail has been worked out is quite characteristic of his methods, and the departures from customary practice are radical, as is usual with Mr. Porter's productions.

Most of the novel features he describes commend themselves to my mind at the outset, others will have to be studied to be appreciated fully.

The "fluid pressure spring," for constraining the movements of the cam-roll relatively to the cam, seems to afford an excellent solution of the problem of using a cam for working balanced valves at a considerable speed, and the profile of the cam has been so carefully studied by Mr. Porter that there is little, if any, room for improvement. Placing the cam on a countershaft, instead of on the main crank shaft, permits such a reduction in its size that a comparatively small cam-roll can be used without an excessive speed of revolution of the roll.

There can be no reasonable doubt that Mr. Porter's method of supplying the cylinder jackets with steam will, as he has found in his trial engine, be a sure preventive of accidents from the presence of water in the cylinders—Monday morning accidents, as they may be called. An interesting confirmation of the correctness of the principle can be had from the records of the working of over one thousand Baxter engines which have come under my notice.

The vertical cylinders of these engines hang inside the boiler itself, and are immersed, steam-chest and all, in the steam which fills the upper part of the boiler, and I have not known of a single instance of injury from water, nor of any symptoms of its presence in the cylinders.

In the shop where these engines are built, every engine used to be started perhaps ten (10) times, and run at intervals, under full steam pressure. The way they were usually started was to first open the throttle widely, then turn the engine past its dead centre

Digitized by Google

and let it fly; and I have no doubt the same practice is continued at Colt's Armory to the present day. No one ever thought of exercising any caution in starting an engine. The cylinder and chest of the Baxter engine are hardly so completely bathed in the steam at boiler pressure as the cylinders shown by Mr. Porter will be.

Whether the complete jacketing of all the cylinders will result in steam economy seems to me doubtful, but, as a safeguard against water-hammer in the cylinders, it must be a success.

The form which Mr. Porter has adopted for the outside of the cylinder casting is admirable, providing, as it does, complete jacketing for cylinder barrel and valve chests, with a minimum of radiating surface.

Whether the improvement in steam economy, resulting from the reduction of clearance space, will be as great as Mr. Porter seems to anticipate, remains to be ascertained by experiment.

In some ways clearance is not an unmitigated evil, and we find results from trials of a triple-expansion engine having twelve per cent. clearance in the high-pressure cylinder, which rank among the best in point of economy. However this may be, the reduction of the size of the piston-valves by multiplying them seems to me to be excellent practice. It must not be inferred from this last remark that I consider the existence of clearance space as conducive to steam economy, for my opinion is quite the reverse of this. Published results of experiments, however, seem to indicate that a high degree of economy can be secured in engines having considerable waste room.

Prof. R. H. Thurston.—It is always a pleasure to find the name of one of our charter-members and pioneers on the list of papers, and a double pleasure to receive from him the results of his latest labors. It sometimes looks as if some of our oldest friends were forgetting the great task which is none the less theirs to-day that it has come to such almost unhoped-for fruition, and were now and then forgetting that they, more than others, should "hold up the hands" of their successors in active management. It gives me special pleasure, in the present case, to welcome so interesting a paper from one of our pioneer members, and to comply with the request to say a word in its discussion.

The general plan of Mr. Porter, in this case, seems to me perfectly correct, ideally; and it has been certainly most thoughtfully and thoroughly worked out. A cam-movement for steam

Digitized by Google

distribution has always seemed to me the perfection of mechanical action for such a purpose; but it has hitherto always proved costly to build, expensive to keep in repair, and its kinematic advantage of correct motion practically less than anticipated. In the present case the designer has, it would seem, met and conquered some of these difficulties of practical operation, and time and prolonged trial must determine to what extent the net result is sufficiently satisfactory to make the new engine a successful competitor with the fittest which have, thus far, survived. The plan of fixed cut-off and throttling regulation is so far perfected, in this case, that we may, I think, expect to see it meet every demand. Working close to the piston, with freedom from friction and, as it may certainly be made, as exact isochronism as may prove desirable, it seems to me an admirable arrangement of governor and valve. The balanced stem is, I have no doubt, a refinement which, minute as it seems, will contribute a sensible element of good working. The steam-separator and the jacket design will, I have no question, do their work, and well. In fact, the report of the action of the engine already built indicates success in operation in all these points. The method of reducing clearance seems to me a real advance.

There is one question of principal, and two, as it occurs to me, of minor importance, which probably only time, and the trials of the market, can entirely solve. The first is that of the comparative value for various classes of application of the system of governing by throttling, with cut-off fixed, and that of regulation by adjustment of the point of cut-off, steam-chest pressure being constant. Willans has shown conclusively that either, under suitable conditions of operation, may do excellently; but I think we must await the result of Mr. Porter's experiments and experience, and that of those who use good engines of this type, before we can settle it. With very variable load I should expect the former, in some cases, at least, to exhibit a decided advantage, since the average adjustment is apt to fall far within that for which the engine is rated; but where, as in many cases is the fact, the engine is required to frequently develop exceptionally large power, the latter, by following nearly full stroke, with steam-chest pressure behind the piston, will, I imagine, be selected. The question whether this or the other type will find most general application, will depend, I suppose, largely on the relative frequency of the one or the other conditions. Thus, for electric lighting, the new

Digitized by Google

engine, proportioned for a regular maximum load, should do better, perhaps, than on street-car work, where the variation is so sudden and so enormous, and where an engine which can either follow full stroke, or cut off at zero, would seem likely to be preferably selected. It will be interesting to ascertain, as we will, I hope, in time, just how far this restriction of the maximum load will prove objectionable in practice. I should suppose the new engine would find its very best conditions of operation in cotton mills, for example, where fine regulation, with a fairly constant full load, may be required.

The minor questions concern the quietness, durability, and general efficiency of the gearing, and the safe working of the cam-roller-pin at the pressures and speeds proposed for it, during a long life. These are points to be settled only by experience and prolonged use. We shall all hope to see the engine well tested, and shall wish for it all the success that the patience, industry, ingenuity, and genius of its designer give title to. I think it will find its place.

Zachariah Allen, in 1834, attached the governor to determine the point of cut-off on an old-fashioned slide-valve engine; Corliss, in 1849, applied it to the drop cut-off; Sickles and Greene used it about the same time on other forms of gear, including, in the former case, the oldest detachable gear. The return to a fixed expansion and throttling governors may not prove a retrograde movement; although substantially all the fine work of the world, both in economy and in regulation, is performed by the other system. Mr. Leavitt has, for many years, successfully used cams for slower engines, and has secured a beautiful steam-distribution. Mr. Porter's plan of holding contact by fluid pressure, and thus avoiding lost motion at high speeds, seems sensible and practicable, and, even if it did not, his trials of it would seem to have settled that question. It is a pretty device. The old "French cam," used for many years by Mr. Wright, on some of his engines, and described by Armengaud about 1850, is another illustration of a successfully working cam, and that with adjustable ratio of expansion. Mr. E. S. Bowen made a frictionless governor, in Sibley College, some years ago, but with uncertain success.

On the whole, it appears to me that Mr. Porter has designed one of the most interesting and admirable examples of a completely new engine, in which details are fitted each to every other in the most natural manner possible, that has yet appeared.

Digitized by Google

Mr. George I. Rockwood.—A famous English writer some seventy-five years ago remarked that, although before the Flood a man could take one hundred and fifty years in which to write his first book and then live several centuries afterwards to see it a success, yet nowadays the post-diluvian style of writing naturally contracts itself into those inferior limits which are better accommodated to the abridged duration of human life and literary labor. Said he: "For a writer to handle a subject as if mankind could lounge over a pamphlet for ten years, as before their submersion, is to be guilty of the most grievous error into which a writer can possibly fall."

It is most refreshing, therefore, to note the brevity of Mr. Porter's papers, and, indeed, to read over the many terse and pithy papers presented at this meeting. It is especially helpful to adequate discussion.

I am glad to see that Mr. Porter sees no disadvantage in the use of a relatively large intermediate receiver; apparently, the illustrations of his engine show that the receiver must be a large one, in comparison with the size of the engine.

I would like to remark upon the beauty of design of the frame. It may seem to some a comparatively non-essential part of the designer's business to aim at beauty of outline, especially in so unimportant a part of the engine as the frame; yet it is a very difficult thing to get all the mechanical features into an appropriate arrangement which is also beautiful and attractive to the appreciative eye; and it really is still more important than difficult, if the engine is to be a commercial as well as a mechanical success. It makes no difference to the average buyer how admirable the novelty introduced into the design of the engine may be, you cannot sell to him unless the engine commends itself on first sight.

One other point occurs to me which I would like to speak upon. Mr. Porter alludes to the unadaptability of an automatic cut-off engine, whether simple or multiple cylinder, to a variable load, owing to increased loss from cylinder condensation at very early cut-offs. In this connection I would like to speak of the unadaptability of triple-expansion engines to variable loads, when the intermediate and low cylinders have their points of cut-off varied automatically by the governor, *to the same extent that it alters the cut-off in the high-pressure cylinder.* This was pretty nearly the case with the triple-expansion engines running the electrical road

Digitized by Google

between St. Paul and Minneapolis, described in a paper by Messrs. Pike and Hugo.

They gave as the steam consumption of these engines the excessive figure of nineteen pounds per I.H.P. per hour; and several members declared this to be frequent and customary, and anybody who asserted that thirteen or fourteen pounds could be regularly achieved, ignorant. Perhaps they had truth on their side; but I wish to point out one chief difficulty with those engines, and show how the Natick engine would have avoided it by reason of its peculiarity of design.*

When fully loaded, no drop of pressure was provided for, in these triple engines, at the terminal of the expansion in the first two cylinders. The consequence was that when run under light loads the receiver pressures were not lowered, but rather were increased, thus causing (1) large loops in the diagrams from the high and intermediate cylinders, or, in other words, negative work in those cylinders, to such an extent as to put upon the low-pressure cylinder the duty of driving the external load. Thus, the engine was converted into a simple condensing engine, and its economy could be no better than that of one of James Watt's engines. But it caused (2) a great waste of friction by reason of having to keep in motion two useless pistons.

Now I will present a diagram (Fig. 49) to illustrate my meaning, and show how the Natick engine would have avoided the difficulty.

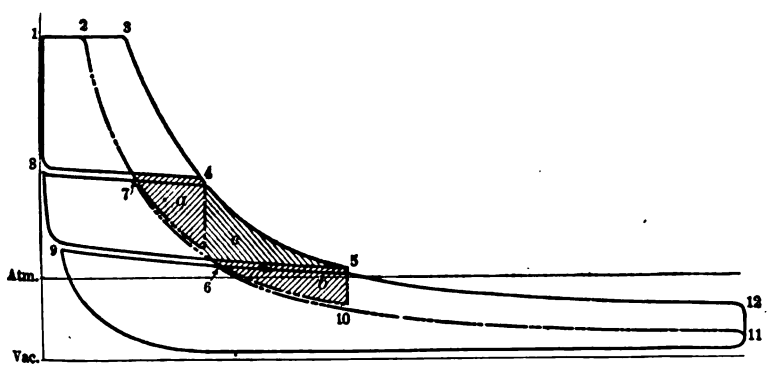

FIG. 49.

Suppose cut-off in high-pressure cylinder to take place at 3, in the intermediate cylinder at 4, and in the low-pressure cylinder at

* For description and discussion, see *Transactions* A. S. M. E., Vol. XVI., p. 179.

Digitized by Google

5, when the triple-expansion engine was fully loaded, all cut-offs being so ordered as to eliminate drop in both first and second cylinders, and receivers supposed large enough to cause a nearly horizontal back-pressure line. These suppositions were facts in the case of the Minneapolis engine.

Now supposing that the law of the curve 3, 4, 5, 12 is $PV=$ constant, it is plain that the Natick engine would have lost the shaded area *c* under like conditions of operation. Actually, the constant which is equal to PV is not the same for all the curves, 3–4, 4–5, and 5–12; on account of cylinder condensation the area *c* is much larger, relatively, in my diagram than it would be in practice. Whatever the loss of area is, the percentage of loss is found by referring it to the whole area due to cut-off at 3.

Suppose the cut-off to take place, now, at 2, thus giving the curve 2, 7, 6, 10, 11. Suppose, also, that the receiver pressures are not lowered as was the case with the Minneapolis engines. (The fact was, the cut-offs on the second and third cylinders shortened somewhat faster than did that on the high-pressure cylinder, and, as a consequence, the receiver pressures were a bit higher with cut-off at 2 than with it at 3.) The shaded areas, *a* and *b*, would be formed, and these represent negative work in the first and second cylinders. In practice the areas *a* and *b* are each of them larger than area *c*, and their harmful effect is to be expressed by referring them to the whole area due to cut-off at 2. Indeed, an inspection of the published cards from the Minneapolis engine shows that the effect of these loops was to almost nullify the effective work of the first two cylinders, thus converting the engine as a whole, as I said at the beginning, into an old-fashioned condensing engine using steam at four or five pounds pressure; whereas the Natick engine, operated at the same point of cut-off, 2, and governing on both cylinders as in the Minneapolis engine, would have neither drop nor loop. In other words, the Natick engine overcomes the difficulty without meeting it.

Here is, I believe, a reason why engines designed after the style of the Natick engine have given so uniform an economy as they have done under variable loads: no negative work is done on receiver steam. If the intermediate cylinder were in use, there would be a large negative quantity of work done, thus converting the first two cylinders into pumps to resist the effort of the low-pressure piston and the fly-wheel.

Digitized by Google

* Mr. Kent has speculated as to whether, after all, there is any loss of energy in the engine as a result of the loop action.

I suppose he does not question that the area of the loop represents negative work, and it is some inadvertence that causes him to query as to the propriety of subtracting the area of the loop from that of the remainder of the card in determining the power of the cylinder exerted on the crank-pin.

Mr. Kent's speculation is, it appears to me, more academic than practical, as we know that a high-pressure cylinder at work under these conditions would condense some of the incoming steam and deliver it as water into the receiver. The heat equivalent of the negative work done in this cylinder on the receiver steam would be quickly swallowed up in evaporating this water into steam at receiver pressure. This latent heat cannot reappear as work.

If we suppose the steam to have the properties of a perfect gas, thereby having no water to evaporate in the receiver, then it seems likely that some portion of the negative work would be recovered in the second and third cylinders, because the volume of the gas at cut-off in second cylinder would be increased if negative work heated, by compression, the receiver gas. That there would still be a loss due to negative work, however, is evident from the very supposition that the volume of gas at constant pressure in the second cylinder is greater than it would be without the negative work. Plainly, the final temperature of the gas as it escapes to the condenser is higher than it would have been without negative work, or, in other words, more heat is taken from the boiler to do the same amount of useful work.

Let us suppose that the points of cut-off in the intermediate and low-pressure cylinders are so ordered as to cause the areas of the loops in first and second cylinder diagrams to equal the areas of the useful portions of the diagrams. Then, even with saturated steam to start with, as well as in the case of a perfect gas, the thermo-dynamic loss would be large, as the result of doing all the work in the low-pressure cylinder, by reason of the greatly lessened range in temperature and pressure through which the steam is allowed to work; or, to put it another way, by reason of the throttling action on the steam of the first two cylinders.

Mr. Oberlin Smith.—I want to say a word in favor of the cam

* Added since the meeting.

Digitized by Google

itself as a mechanical device. It has always seemed to me a curious thing that more cams have not been used for engine valves. They have been used on Western steamboats, in a crude way, and on large pumping engines with slow speeds. etc.; but perhaps the catch 'em and snatch 'em and let 'em go valve gears are good mechanical devices where we have to have variable cut-offs. I will not discuss here whether or not we can get along with engines of the type described in this paper, having a fixed cut-off, but will assume that they are all right. The question I am answering is whether a cam and roller is a good mechanical device for obtaining any desired motion. To me it has always seemed the preferable way; where you cannot do it with levers and cranks, and where you can do it with a cam and get just what you want. In high-speed engines we cannot admit any of the snap 'em and catch 'em arrangements used on slower engines of the Corliss type, and if a cam seems as if it won't do what we want, the only thing remaining is to make it do it. I have had a good deal of experience with cam motions of various kinds, both with cams and rollers made of steel castings not hardened, and with ordinary forged-steel hardened, both of which have given excellent results if properly proportioned. I have not had as much experience with chilled iron cams, like these of Mr. Porter's, but I see no reason why they should not be both excellent and durable. The chief point, in the first place, with any cam motion, is to get abundant bearing surface upon both roller and cam, so that they will not wear out too soon, including the pin of the roller. I believe we are not told here whether the pin revolves with the roller; but it is usually best to let it so revolve, so as to avoid making the roller hole wear loose and bring its pressure on a line of contact only. The cam should be made of proper material, and sufficiently broad-faced not to crush or to wear too fast. It should, furthermore, be so proportioned as not to give too rapid a motion suddenly to the reciprocating parts, the "time" of the arrangement being so devised that the accelerating and retarding motions of the heavy parts will be approximately the same as given by a crank motion, or, better still, as given by gravity. I understand that particular attention has been paid to these points by the accomplished designer. If these things are looked after as they should be, there is no reason in the world why any desired motions of this kind cannot be obtained by cams exactly as we want them, why they cannot run at

Digitized by Google

high speed, why they cannot be durable, and, finally, why they cannot be cheap to make.

Mr. Binsse.—I should like to ask Mr. Porter what special provision has been made to make the piston valve tight, and to provide against wear in the piston valve. I am not a steam engineer, but I have had to repair steam engines in which a piston valve has been used, and I have been struck by the excessive wear on the piston valve.

Mr. Porter.—I am happy, Mr. President, to answer this question. The subject of the durable fit of the solid piston valve has occupied my attention a great deal, and in respect to this matter it seems to me that by avoiding the causes of wear the result will be avoided. It is entirely a question of construction and workmanship. The causes of wear consist in imperfectness of form of the cylinder in which the piston valve moves, and of the valve itself, the valve bearing on a few points instead of all over; in distortion of form of these surfaces under heat; in injury to the surfaces from seizure through unequal expansion; in the binding of the valve in its seat; and in the action of water, which, by impinging on the surface, has been found to be destructive of the valve seat. In this construction these causes of wear are completely avoided, as has been explained in the last paper.

These valve seats are prepared with extreme care, intended to be truly bored (they are not ground), by using a bar which is demonstrated to be straight. There is one demonstration of a straight bar which is this: Lay it on a straight-edge, entirely dry, give it a rub, turn it over, and if you have a uniform, unbroken bright line from end to end, that bar is straight, and that bar, moving in firm bearings just allowing it to move, is capable of boring a parallel hole, and boring a parallel hole is a much more difficult thing than a great many persons who have not investigated the subject suppose it to be. This bar I do not cut for inserting the tool. The head carrying the cutters is bored to fit the bar snugly, and is secured on any part of the bar by a hollow key such as I have described for securing the cam on its shaft. The cutters can be set at any part of the bar, and the surface of the bar will never be marked. Now, when that cutter and bar are fed through a hole, and the finishing cut is taken in the proper manner, you have practically a perfect hole, and when a piston valve is properly fitted to it, it has equally

Digitized by Google

approximate contact at every point of the surface. You may set it in a vertical position, and you can weigh that valve and yet it will be steam-tight and water-tight. With such a construction there is no tendency to wear. Wear never begins, unless from some extraneous cause. I should say that pains are taken in these cylinders to make all the parts—namely, the cylinder itself, as cast, the valve seats and steam passages and ports, and the outer envelope enclosing the steam jacket—of uniform section, as shown in the illustrations to Paper DCXVIII., so that there can be no internal strain which shall produce distortion of form when the cylinder is hot. The cylinder and valves, as also the heads and piston, are cast of a uniform mixture of iron, to insure equal expansion by heat.

Under these conditions, the piston valve properly fitted can be relied upon to be tight for a great length of time, and that is the experience of persons who have approximated to that construction, especially in the vertical engine. With ordinary lubrication there is nothing to wear it, and a great length of life is assured to the valve. I am impressed with that fact for this reason: I introduced, over thirty years ago, the plan of making cross-heads solid, without any means of adjustment. In some cases that plan has been a failure, where engines have been running in dirty places where the atmosphere is full of grit all the time; but under ordinary conditions they have endured well. In clean engine rooms, those surfaces, originally nicely fitted, have worked to my knowledge ten or twenty years, and are running just as good as ever they were. On the lower guide-bar which takes the vertical thrust of the connecting rod, after a dozen years' running I have seen the scraping marks still visible. That is what will be the case under favorable conditions, in a clean place, with properly lubricated surfaces. These surfaces become as hard as glass. That is precisely what we have in our steam cylinder, except that in the cylinder there is no pressure on the surfaces, and I think that the provision for re-boring will come into play very rarely indeed; but it is always made, and can be employed when required. My impression is that these valves will be exceptionally tight through a long course of years. You know we have not got to compare ourselves with perfection. We have to compare ourselves with things as they exist, and that is very far short of perfection. But I think we shall approximate it much more nearly than has yet been done.

Digitized by Google

Mr. Dean.—Mr. Porter has touched upon the use of cam valve gears for reversing engines. It may be interesting to members to know of something that has been done in that direction. It happened to come to me some six or seven years ago to have the direction of the carrying out in detail of some large vertical triple-expansion reversing engines, with four valves to each cylinder, and these engines had to be reversed with cams, and also with an automatic cut-off engine on the high-pressure cylinder. Of course, the problem was novel, and took a good deal of thinking to carry it out; but finally we got to the end of it, and the result was a valve gear which really worked very well indeed. The engines had fifty-two-inch low-pressure cylinders by six feet stroke, and were to run sixty revolutions per minute and work with 185 pounds of steam. We found that it was best to make the cams reciprocating. We encountered the difficulty of reversing valve gears—that is to say, at anything like an early cut-off, of diminished port opening, just as it is found with the eccentric. Of course, we could obviate it to a much greater extent than could be done by any valve gear which had the valves operated by an eccentric. The initial motion is given to this reciprocating cam shaft by means of what in this country is generally known as the Walschaert link, and the lap was removed from the valves by connection with the beam. The automatic cut-off was used more as a safety feature than anything else, because the cut-off could also be varied by the reversing mechanism. I do not know that anything has ever been said in public before about these engines, but they are erected, although I have not seen them. I believe they are running satisfactorily.

Mr. M. N. Forney.—It may be interesting to some of the younger members here, who are not as old as some of the rest of us, to know that the cam was used quite extensively on Winans' old camel locomotives. On those locomotives there were two eccentrics, one for the forward and one for the back motion, which worked at full stroke, and there was a cam which cut off, as I recollect, about one-third of the stroke. A number of, hundreds of, those engines were built and worked quite successfully for a great many years. I will make a sketch on the blackboard; it will, perhaps, be interesting enough to do that.

The cam was of a heart shape, like *A*, Fig. 142. Then there was a yoke, *BB*, on each side; a short link, *C*, suspended it from above, and there was a rod, *D*, with a hook, *E*. There was one

Digitized by Google

interesting feature, that perhaps may not be new, about the method of drawing that cam, which is extremely simple. You draw a triangle, *abc*, the proportions of which are optional. You now take a centre, *b*, and describe a curve, 1–2; then from *a* as a centre describe the curve, 2–3; then, from *c* as a centre, describe 3–4. Then go back to *b* and describe 4–5; then over from *a* describe 5–6, and from *c* describe 6–1. Now such a cam has the property that it is of an equal width at any point. If included by two parallel lines like *de* and *fg*, with the cam in any position, it is always the same width across. There is nothing novel about it, but cams of that kind were used on a great many engines for many years. The locomotives had only forty-

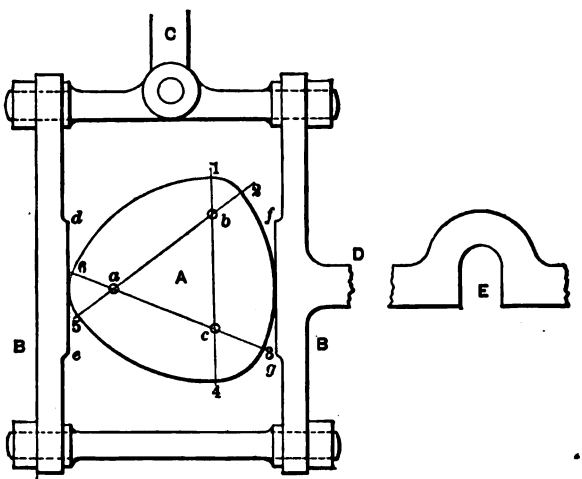

FIG. 142.

two-inch driving wheels, and, of course, had to run often at very high speed for that size of wheel. The cams were made of cast-iron, and the surface was chilled and ground on an ordinary grindstone, with a gauge of a parallel form like *edfg*, so as to get the weight at every point uniform and equal. The eccentric rods were also worked with hooks, which dropped into rockers. This was a case in which cams were used for a great many years, and used quite successfully.

Mr. John Thomson.—I have just read, with a great deal of interest and with profit, Mr. Porter's paper on the "Description of a Cam for Actuating the Valves of High-Speed Steam Engines." This interest, doubtless, comes largely from a certain

Digitized by Google

community of interest in the premises; for I have been called a "Cam Crank!"

I presume to offer the following excerpts from a recent paper presented by me to the American Society of Civil Engineers in relation to printing and embossing presses.

Thus, referring to a carriage action, driven back and forth by a closed cam:

"There is one feature here, however, which may be adverted to, corresponding somewhat to the transition curve theory of railroads, namely, that all cams should have their starting-point materially further back and their entering curve of materially greater radius than might appear called for theoretically. The reason for this is, that the point marked for the theoretical divergence from the concentric arc or the tangent is seldom, if ever, the actual position at which divergence takes place; for the reason that in actual mechanism the lost motion and spring of parts are often sufficient to neutralize the easement. The consequence is that although the mathematics of the paper plan may be faultless the actual performance may be far from satisfactory."

Judging from the drawings presented, it is intended to have a full-face contact between the roll and the periphery of the cam, and that the roller is closely confined endwise. If the fitting and adjustment of parts are faultless, and shall remain so, this will be all right; but practically this will not be the case. Mr. Porter says: "The profile or working face of the cam is the important thing." Yes; to start in with; but after that "the important thing" is to insure the revolution of the roll; which at one hundred and eighty cam revolutions means about six hundred and thirty revolutions of the roller per minute. I need hardly call Mr. Porter's attention to the fact that in a cam of as pronounced deformation of contour as his, there is a tendency, in portions of the epicycle, to produce a greater pressure between the roller and its journal or stud than that which would be caused by direct or radial pressure. In principle, it is the action of a wedge. And to this, as the result of my experience, I submit this additional quotation:

"It has proven advantageous in our practice to form all cam-rollers slightly crowning. In this wise the pressure is bound to be transmitted evenly to the stud or journal, and it will be more certain to revolve under all circumstances.

"It is believed that, wherever practicable, all friction rollers

Digitized by Google

and crank-pin bearings and the like ought to be freely fitted sidewise—that is, having plenty of end-motion; as under such conditions there is less liability to bind between shoulders or to cut or 'ring up' than where no opportunity is given for the bearing surfaces to automatically shift. It is probable that a principal reason why end motion shows up, practically, as well as it does, is that it assists to distribute the oil between the working surfaces."

Referring to Fig. 34 of the paper, may I ask, is the steam pressure in the small cylinder to be sufficient to fully overcome the momentum of the vibrating parts? If so, then this must call for a fair excess of pressure to insure certainty of action, and as a consequence does not the friction-roller act to *drive* the cam through about half of its revolution? I so understand the operation. This being the fact, it will call for good fitting in the bevel gears, which thus alternately drive and follow.

But it is a beautifully worked-up device, deserving of the highest praise, and I simply raise these points because, with the crankiness of a printing-press cam-maker, but that lack of steam-sense, as Professor Denton would say, I would have designed the cam to drive positively in both directions. And why not?

*Mr. C. T. Porter.**—I cannot refrain from giving utterance to the extreme gratification which I have felt at hearing the expressions of hearty approval with which this, I must admit, somewhat bold, departure in steam engineering has been received. A few remarks only seem to call for reply.

Respecting the cam-roller and pin, I would emphasize the provision for their durability made in extended and hardened surfaces, and excellent lubrication, and also the readiness and cheapness with which they may be renewed in case of serious wear.

In response to the pertinent questions of Mr. Thomson, which show complete familiarity with the subject, I would say, there are two reasons why it is not attempted in this engine to drive the cam positively in both directions. The first is, that it cannot be done, because the opposite throws of the cam are timed quite differently to compensate for the angular vibration of the connecting-rod, a feature which is by no means to be sacrificed. So the cam will not work in the ordinary yoke, as illustrated by Mr. Forney. This reason would seem to be sufficient, but there is another which quite reconciles me to this impossibility. The elastic pressure insures silent running, whatever wear may take

* Author's closure, under the Rules.

Digitized by Google

place; while positive motion in both directions involves a knock on each reversal, as soon as the least lost motion comes to exist.

The thrust of the cam against the roller is generally at a varying angle with the line of its motion; but at the points where this angle is greatest the acceleration or retardation is much less than the extreme amount; so the pressure between the roller and pin will not be greater on this account.

The roller does act to drive the cam during half the revolution; the transition is, however, extremely gradual, so that with properly fitted gears the backlash will not be heard. The pressure is intended to be sufficient to maintain contact at a speed considerably above the normal speed of the engine. The suggestion that the cam-rollers be made slightly crowning seems to me worthy of attention.

The point raised by Mr. Oberlin Smith, that the roller, if it revolved on the pin, would be worn so as only to bear on a line along the pin, does not seem to be well taken. It assumes that the pin does not wear.

With respect to waste room, I have always held that the space additional to that swept through by the piston, which has at every stroke to be filled with steam that does very little good, *is* "an unmitigated evil." This is questioned by Professor Richards. I will endeavor to present the loss from waste room clearly.

Take, for example, a cylinder of 20 inches stroke, working steam of 90 pounds total pressure, cutting off at .2, or 4 inches, of the stroke, and having 6 per cent. of waste room; which presents a case quite within the limits of ordinary practice. The waste room adds 1.2 inches to the length of the cylinder, and so adds .3 to its capacity up to the point of cut-off, and to the weight of steam required to fill it. What good does this additional 30 per cent. of steam do? It adds .035 to the mean pressure, by raising the expansion curve to a higher terminal pressure, and that is all. Except for adding 1.65 pounds to 46 pounds mean pressure, it is thrown away. In the case cited by Professor Richards, the 12 per cent. of waste room is twice as wasteful as this. At .2 cut-off, it adds .6 to the weight of steam used, and .07 to the power exerted. At earlier cut-off, the percentage of loss becomes greater, being, at .1 cut-off, 60 per cent. in the case I have supposed, and 120 per cent. in the case cited by Professor Richards.

All this is obvious and familiar. Merely citing a case apparently at variance with this plain measurement seems to me as if

Digitized by Google

somebody, seeing an object rising in the air, should be unsettled about the law of gravitation. In the case cited by Professor Richards, the 12 per cent. waste room was only in the high-pressure cylinder of a triple-expansion engine, and was probably filled by the compression. In some way, of course, examination must show that case to be reconcilable with the truth. I confess that I cannot discuss this subject without some feeling, for my engineering life has thus far been seriously clouded by large waste room. It was the one defect of the Porter-Allen engine. In the engine now presented to the Society and the public, I am convinced that no feature will be found of greater value than its small percentage of waste room.

Digitized by Google

DCXIX.*

TRIAL OF THE LEAVITT PUMPING ENGINE, AT LOUISVILLE, KY., CAPACITY 16,000,000 *GALLONS IN* 24 *HOURS.*

BY P. W. DEAN, BOSTON, MASS.
(Member of the Society.)

In April of the present year the writer, as expert for the Louisville Water Co., Louisville, Ky., and Mr. Dexter Brackett, as expert for the builders (the I. P. Morris Co., of Philadelphia) of the new pumping engine at Louisville, Ky., conducted a contract trial of six days' duration. The engine ran 144 hours and 10 minutes without a stop, which is the longest test run on record, and established itself as the most economical compound engine that has ever been tested, so far as the writer knows. The result is phenomenal and is of great interest at the present time on account of tests of some recent high-expansion engines with cylinder ratios of 7 to 1, an account of one of which the writer gives in another paper. It also has great interest in showing how closely reached by this engine are the records of many triple-expansion engines. The writer believes, however, that a triple-expansion engine designed on the same lines will lower the steam consumption by a paying percentage.

The engine referred to is Pumping Engine No. 3 of the Louisville Water Co. It is of the well-known Leavitt type, having two vertical inverted cylinders, the piston rod of the high-pressure cylinders being connected by links to one end of a beam, and the low-pressure similarly to the other end of the beam. The main shaft is at one end of the engine, and the connecting rod passes from a pin in the upper part of the beam to the crank-pin. The steam pistons have opposite motions in consequence of this arrangement, and the exhausts from the

* Presented at the New York meeting (December, 1894) of the American Society of Mechanical Engineers, and forming part of Vol. XVI. of the *Transactions.*

Digitized by Google

ends of the high-pressure cylinder pass to the corresponding ends of the low-pressure cylinder. There are two reheating receivers between the cylinders, composed of small brass tubes, inside of which is live steam of boiler pressure, the exhaust steam passing in contact with the outsides of the tubes. Both cylinders are steam-jacketed on heads and sides with steam of boiler-pressure.

Each steam-cylinder is provided with four gridiron valves operated by Leavitt cams. The point of cut-off in the high-pressure cylinder is automatically determined by a ball governor, but that of the low-pressure cylinder is fixed. The engine is of the most massive character, the weight being far greater than that of any other pumping engine of the same capacity. The pumps are located directly under the engine, and the plungers are connected to the beam at such points that, while the stroke of each steam piston is 10 feet, that of each pump plunger is 7 feet. The plungers work vertically and are of the differential type, being single acting on the suction, and double acting on the discharge. The engine is provided with a surface condenser and vertical double acting air pump.

On account of the rise and fall of the Ohio River the bed plate of the engine is placed above the highest high water mark, while the bottoms of the pumps are sufficiently low to take water at the lowest stages of the river. The distance from the bottoms of the pumps to the bottom of the bed plate is 61 feet.

The trial consisted of ascertaining the duty by weir measurement at the reservoir and nearly or quite all other data of interest. That part of the trial relating to the engine only will be here described. The engine is worked by steam of 140 pounds gauge pressure at the boilers, and this is conducted through 180 feet of steam-pipe, well covered, to the engine. At the engine the total per cent. of condensation in this pipe and priming of the boilers amounted to $2\frac{58}{100}$ per cent., and all of this but $\frac{55}{100}$ of 1 per cent. was thrown out by a separator. The steam pressure at the engine near the high-pressure cylinder fell to 137 pounds by gauge.

At the beginning of the trial the steam pressure in the two boilers used was at about 90 pounds, and just before starting the engine the water-level was marked in both boilers. Immediately after stopping the engine, 6 days 10 minutes later, the same pressure and water-levels existed.

Digitized by Google

From the total weight of steam entering the steam-pipe there have been deducted the steam used by the calorimeter and the water removed by the separator. In the appropriate places the moisture shown by the calorimeter was deducted, viz., wherever results are stated in terms of dry steam.

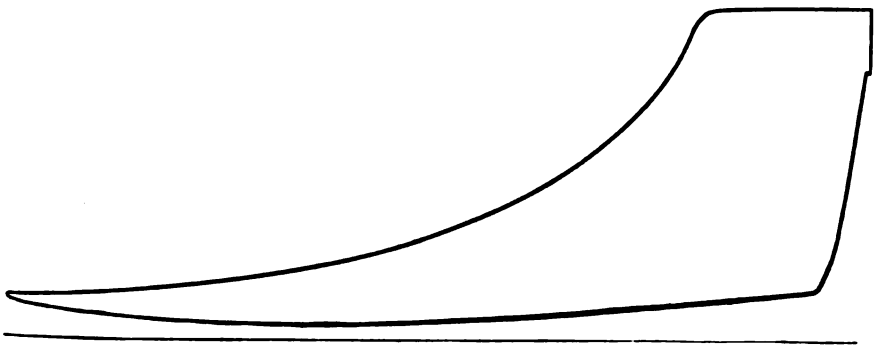

FIG. 50.—No. 128. High-Pressure, Bottom. $A = 2.78$.

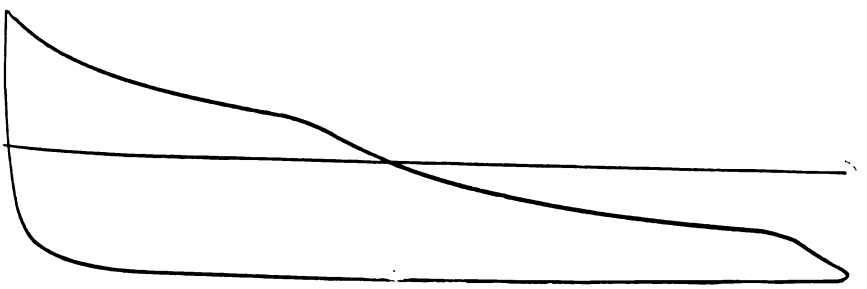

FIG. 51.—No. 128. Low-Pressure, Bottom. $A = 2.81$.

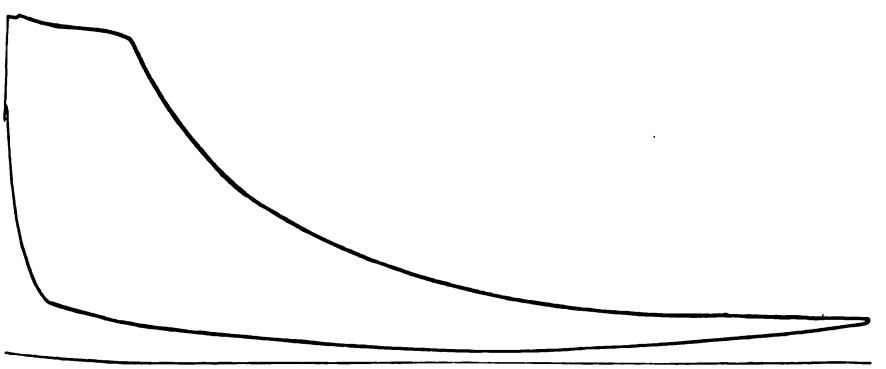

FIG. 52.—No. 128. High-Pressure, Top. $A = 2.72$.

Digitized by Google

Indicator diagrams were taken every hour throughout the 144 hours on separate indicators at each end of each cylinder. These diagrams were taken with great care, and after the trial the scales of the indicator springs were determined at the Brooklyn Navy Yard.

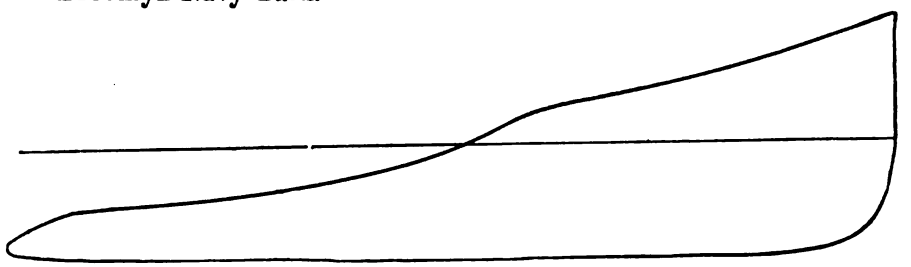

FIG. 53.—No. 123. Low-Pressure, Top. $A = 2.85$.

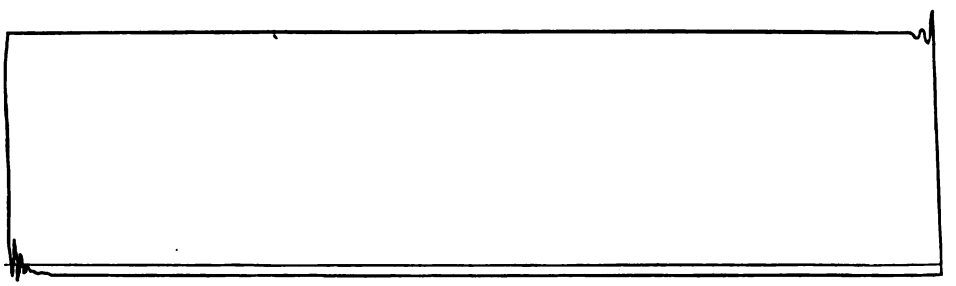

FIG. 54.—High-Pressure, End.

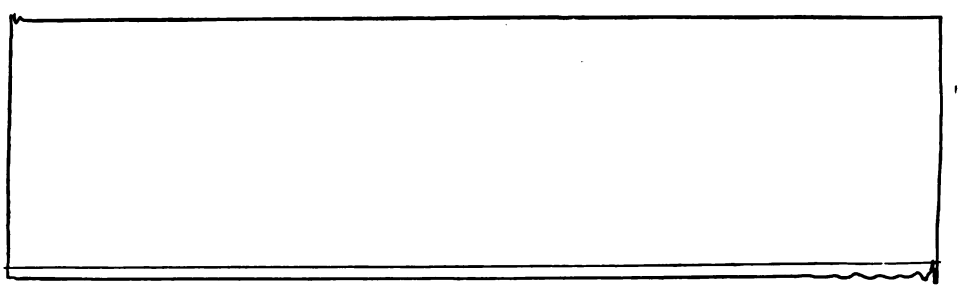

FIG. 55.—Low-Pressure, End.

Before the trial the engine had been run the greater part of a year. The piping and cylinders were thoroughly covered with a non-conductor of heat.

The following are the leading dimensions of the engine:

Digitized by Google

Type, Leavitt compound vertical inverted beam fly-wheel.

Diameter of high-pressure cylinder, hot	27.21 in.
" " low-pressure " "	54.13 in.
" " fly-wheel	36 ft.
" " high-pressure piston rod	5½ in.
" " low-pressure " "	6 in.
Stroke of each piston	10 ft.
Mean clearance of high-pressure cylinder	1,585%
" " " low-pressure "	1,530%
Diameters of each differential plunger	34 in, and 24 1/16 in.
Stroke " " " "	7 ft.
Mean ratio of steam piston areas	4,015 to 1.
Volume displaced by plungers during one revolution of engine	660.30 gallons.
Diameter of each discharge pipe	24 in.

Results of Engine Trial.

Duration	144 hrs. 10 min.
Total number of revolutions	160,666.5
Average number of revolutions per minute	18.574
" piston speed per minute	371.48 ft.
" plunger speed per minute	260.04 ft.

Average Temperatures.

Of Engine room	60° to 86°
Of external air	48° to 86°
Of main feed at weighing tank	81.2°
" " " on entering boiler	108°
Of jacket and reheater drain at boiler	328.3°
Of mixture of feed-waters	143.3°
Of water in pump well	58.7°

Average Pressures.

Of atmosphere by barometer	14.60 lbs.
Of steam at boilers by gauge	140.00 lbs.
" " " " absolute	154.60 lbs.
" " " engine by gauge	137.00 lbs.
" " " " absolute	151.60 lbs.
Of initial steam, high-pressure cylinder, absolute	145.75 lbs.
Of terminal pressure, low-pressure cylinder, absolute	7.32 lbs.
Of back pressure, low-pressure cylinder, absolute	0.95 lbs.
Vacuum by gauge	27.75 in.
Water pressure by mercury column	62.50 lbs.
Height of mercury zero above water in pump well	49.04 ft.
Total water pressure	83.74 lbs.
Equivalent head	193.35 ft.

Steam Used by Engine.

Moist steam entering steam-pipe	1,157,923 lbs.
Water drained from separator	23,428 lbs.

Digitized by Google

Steam used by calorimeter	727 lbs.
Total moist steam used by engine	1,133,768 lbs.
Percentage of moisture in steam after leaving separator	0.55%
Total dry steam used by engine	1,127,533 lbs.
" moist " passing through inner steam cylinders	943,973 lbs.
" " " " " steam-jackets and reheaters	189,795 lbs.
Percentage of moist steam used by jackets and reheaters	16.74%
Moist steam used per hour, per I.H.P.	12.223 lbs.
Dry " " " " " "	12.156 lbs.
" " " " " " " by inner cylinders	10.120 lbs.
Moist " " " " " pump, horse-power	13.125 lbs.
Dry " " " " " " " "	13.050 lbs.
Prevailing point of cut-off high-pressure cylinder	20.20%
" " " " " low-pressure "	42.10%
Drop between cylinders	0.00 lbs.
Compression in high-pressure cylinder	full.
" " low-pressure "	¼ full.
Ratio of expansion by volume	20.40
Steam accounted for by indicator at high-pressure cut-off in per cent. of 10,120 pounds	7.75 lbs. = 76.58%
Steam accounted for by indicator at high-pressure release	9.166 lbs. = 90.57%
" " " " " " low-pressure cut-off	10.008 lbs. = 99.60%
" " " " " " " " release	9.725 lbs. = 96.09%

NOTE.—The last four items are to be regarded as closely approximate only.

Average Powers, Etc.

Average mean effective pressure in high-pressure cylinder	43.53 lbs.
" " " " " low-pressure "	14.155 lbs.
Horse-power developed by high-pressure cylinder	279.00 H.P.
" " " " low-pressure "	364.40 "
" " " " both cylinders	643.40 "
Percentage of power in high-pressure cylinder	43.36%
" " " " low-pressure "	56.64%
Horse-power of plungers	599.10 H.P.
Friction horse-power	643.40–599.10 = 44.30 "
Efficiency of mechanism	93.12%
Friction of mechanism	6.88%

British Thermal Units, Etc.

Mean absolute steam pressure at engine	151.60 lbs.
" temperature of rejection of engine (air pump discharge)	84.2°
Mean temperature of rejection of jackets and reheaters at engine	335.3°
Heat of liquid of air-pump discharge	52.27 B.T.U.
" " " " jacket and reheater drain	306.00 "
" " vaporization of steam supply	860 60 "
" " liquid of steam supply	330.90 "

Digitized by Google

Dry steam in mixture used by engine	0.9945	
B. T. U. per lb. of moist steam passing through inner cylinders, 0.9945 × 860.6 + 330.90 − 52.27 =	1134.50	B.T.U.
B. T. U. per lb. of moist steam passing through jackets and reheaters, 0.9945 × 860.6 + 330.9 − 306.0 =	880.8	"
B. T. U. passing through cylinders in 144 hrs. 10 min	1,070,937,531	"
B. T. U. passing through jackets and reheaters in 144 hrs., 10 min	167,171,428	"
B. T. U. passing through engine in 144 hrs., 10 min	1,238,108,959	"
B. T. U. used per I.H.P. per minute (moist steam)	222.46	"
Mechanical equivalent of heat (Rowland)	778	ft. lbs.
Thermodynamic efficiency of engine $\frac{33000}{222.46 \times 778} =$	19.07%	

Duties based upon Plunger Work.

Plunger work performed in 144 hrs., 10 min	171,015,314,960	ft. lbs.
Duty per 1,000,000 B. T. U. used by engine alone	138,126,000	"
" " 1,000 lbs. moist steam used by engine alone	150,838,000	"
" " 1,000 lbs. dry steam used by engine alone	151,672,000	"
" " 100 " " Pittsburgh coal	125,444,000	"
" " 100 " " Pocahontas "	139,031,000	"
" " 100 " " Pittsburgh combustible	129,295,000	"
" " 100 " " Pocahontas "	145,762,000	"

Sample indicator diagrams from steam and water cylinders are given (Figs. 50–55), and also a combined diagram (Fig. 56).

This engine is, both in design and results, in striking contrast with the Rockwood System engine described in the writer's other paper, as shown in the following table:

Engine.	Leavitt.	Rockwood.
Steam pressure absolute	151.60 lbs.	175.50 lbs.
Vacuum	27.75 in.	25.3 in.
Ratio of expansion	20.40	33.00
Number of revolutions per minute	18.57	76.4
Length of stroke	10 ft.	4 ft.
Piston speed per minute	371.5 ft.	611.2 ft.
Cylinder ratio	4 to 1	7 to 1
Drop between cylinders	None	About 14 lbs.
Dry steam per I.H.P. per hour	12.156 lbs.	12.84 lbs.
Difference in favor of Leavitt	0.684 lbs. = 5.3%	

This comparison shows very clearly that the ratio of 7 to 1 does not necessarily produce as economical results as a ratio far removed from it, even with the additional advantages of 24 pounds more steam pressure, 1.6 times as many expansions, four times as many reciprocations per minute, and twice as great pis-

Digitized by Google

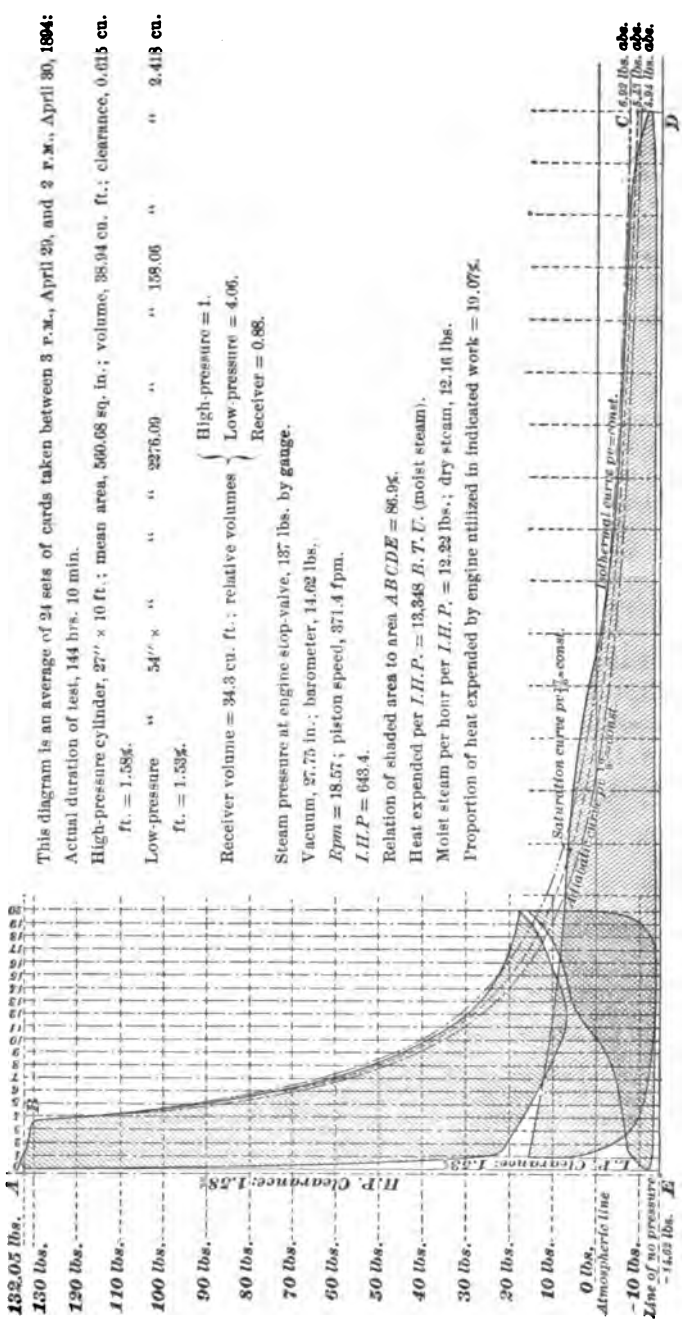

This diagram is an average of 24 sets of cards taken between 3 P.M., April 29, and 2 P.M., April 30, 1894:

Actual duration of test, 144 hrs. 10 min.

High-pressure cylinder, 27″ × 10 ft.; mean area, 560.68 sq. in.; volume, 38.94 cu. ft.; clearance, 0.615 cu. ft. = 1.58%.

Low-pressure " 54″ × " " " 2276.09 " " 158.06 " " 2.413 cu. ft. = 1.53%.

Receiver volume = 34.3 cu. ft.; relative volumes { High-pressure = 1. Low-pressure = 4.06. Receiver = 0.88.

Steam pressure at engine stop-valve, 137 lbs. by gauge.

Vacuum, 27.75 in.; barometer, 14.62 lbs.

Epm = 18.57; piston speed, 371.4 fpm.

I.H.P = 643.4.

Relation of shaded area to area *ABCDE* = 86.9%.

Heat expended per *I.H.P.* = 13,348 *B.T.U.* (moist steam).

Moist steam per hour per *I.H.P.* = 12.32 lbs.; dry steam, 12.16 lbs.

Proportion of heat expended by engine utilized in indicated work = 19.07%.

FIG. 56.

Digitized by Google

ton speed. It tends to show that no advantage arises from a drop in pressure between the cylinders, if evidence were needed of this.

It is the writer's opinion that in order to use steam in the most economical manner in a multiple expansion engine, the expansion must be continuous throughout the series of cylinders (that is to say, there should be no drop between the cylinders), and that compression should be carried up to the initial pressure in each cylinder. These features have been employed to the fullest extent in the Leavitt engine which forms the subject of this paper, and the result has surpassed all records for economy of engines of its class.

ADDED TO THE PAPER AFTER THE MEETING.

A test of so much importance as that of the Louisville engine, wherein a new record has been established for steam consumption, may, with great propriety, be accompanied by some data of the log of the trial.

The following are the amounts of feed-water weighed each day of twenty-four hours:

1st day,	24	hours				159,752	pounds	of water.
2d	"	"	"			161,799	"	" "
3d	"	"	"			159,972	"	" "
4th	"	"	"			161,848	"	" "
5th	"	"	"			160,488	"	" "
6th	"	24 hours	10	minutes		164,439	"	" "

JACKET AND RE-HEATER RETURN METER READINGS.

Time.	Reading.	Difference.	Weight each cubic unit.	Total weight.
2.55 P.M., April 25, 1894..	9684.5	.....	.....	.....
3 " " " " ..	9690.8	6.3	52.17 lbs.	329 lbs.
" " " 26, " ..	10290.0	599.2	" "	31,260 "
" " " 27, " ..	10884.0	594.0	" "	30,989 "
" " " 28, " ..	11493.0	609.0	" "	31,771 "
" " " 29, " ..	12097.0	604.0	" "	31,510 "
" " " 30, " ..	12708.0	611.0	" "	31,876 "
3.1 " May 1, " ..	13319.3	611.3	" "	21,891 "
3.10 " " " " ..	13323.5	3.2	" "	167 "

The above unit weight of 52.17 pounds was determined by weighing the condensation in a cask of cold water during two hours. Thinking that this calibration might be too short to use

Digitized by Google

for a test of six days' duration, a calibration of twenty-four hours' duration was made by Mr. Hermany, chief engineer and superintendent of the Louisville Water Works, at my request. The engine was run at precisely the same speed and against the same head as existed during the official trial. Indicator diagrams were taken every hour, worked up by me, and gave the same horse-power as on the official trial. During these twenty-four hours the condensation was continuously weighed, and found to be 31,732½ pounds, which is almost identical with the meter results. During this same trial the feed-pump was run by a donkey boiler, and its exhaust was not allowed to enter the boiler. The weighed feed amounted to 193,133 pounds, which is almost identical with the sum of the weighed feed and jacket and re-heater returns, as given above, for any single day.

On October 10 the condensations in the jackets and re-heaters were determined by weighing separately, but simultaneously, during eight hours, with the following results:

Average Condensations per Minute, October 10.

Horse-power Jacket.	Re-heaters.	Low-pressure Jacket.
7.4988 pounds.	10.0417 pounds.	5.2838 pounds.

On October 20 the same determinations were repeated for eight hours, with the following results:

Average Condensations per Minute, October 20.

Horse-power Jacket.	Re-heaters.	Low-pressure Jacket.
7.5083 pounds.	9.9437 pounds.	5.1417 pounds.

The engine ran on each of these trials at the following speeds:

Average number of revolutions per minute, October 10.....18.6083,
" " " " 20.....18.5979,

while on the official trial the average number of revolutions per minute was 18.574. It is not known what head existed on either October 10 or October 20, and, therefore, what power was being generated.

[NOTE.—This paper received discussion jointly with that by the same author on "Trials of a Recent Compound Engine with a Cylinder Ratio of 7 to 1," and the remarks made in debate are published in connection with that paper. *Transactions* A. S. M. E., Vol. XVI., p. 179, No. 620.]

Digitized by Google

DCXX.*

TRIALS OF A RECENT COMPOUND ENGINE WITH A CYLINDER RATIO OF 7 TO 1.

BY F. W. DEAN, BOSTON, MASS.

(Member of the Society.)

CONSIDERABLE interest has been recently shown in the performances of some compound engines working with high-pressure steam; and members will recall a paper presented at the San Francisco meeting by Messrs. Green and Rockwood, giving an account of trials of an engine as a triple expansion engine and, by throwing the intermediate cylinder out of use, as a compound.† The results of the trials, which were evidently made with due care, tended to establish equal economy of the two types.

Laying aside for the present consideration of the possibility of such results being obtained from well-designed and properly worked engines of the two types, the writer desires to give an account of a test which he conducted of an engine founded, in its design, upon the engine referred to, and embodying what is known as the Rockwood system.

This engine was built by the Wheelock Engine Company, of Worcester, Mass., for B. B. & R. Knight, of Providence, R. I. and located at their mill in Natick, R. I. The engine possessed the cylinder ratio of 7 to 1, which, under the system referred to, is held to possess special virtue.

---

* Presented at the New York meeting (December, 1894) of the American Society of Mechanical Engineers, and forming part of Volume XVI. of the *Transactions*.

† *Transactions American Society of Mechanical Engineers*, Vol. XIII., p. 647; No. 499.

Digitized by Google

The following are the leading dimensions:

Diameter high-pressure cylinder, hot	18.44 in.
" low-pressure " "	48.50 in.
" high-pressure piston-rod	3.25 in.
" low-pressure "	4.25 in.
Stroke of both pistons	48.00 in.
Mean ratio of piston areas	7 to 1.
" high-pressure clearance	2¼%
" low-pressure "	2¼%

The engine is a horizontal cross compound, with the high-pressure cylinder jacketed all over, and the low-pressure cylinder on the heads only. There was a re-heater between the cylinders. In the writer's judgment the jackets were badly piped, and it is doubtful if the jacket circulation was good. The re-heater was quite deficient in heating surface. The condenser was of the injector type, made by the builder of the engine. The vacuum was defective, although very cold water was used.

The engine was four hundred feet from the boiler, which was of the Babcock & Wilcox make, but as the pipe and flanges were well covered the condensation was not excessive.

Examination showed the pistons and valves to be tight.

The feed water was weighed upon correct scales, and was pumped by a geared pump. The boiler was entirely separate from others in the same plant, and all connected pipes which could carry unaccounted-for water or steam to or from the plant were disconnected or blanked. There were no leaks either in the economizer or boiler, and in the second test here described the economizer was not in use.

In the engine-room, indicator diagrams were taken by two indicators on each cylinder every twenty minutes, the power being very uniform. A calorimeter was attached to the main steam-pipe near the high-pressure cylinder, and just before it there was located a steam separator. The condensation from this separator was kept at a constant height in a water glass, and the water drawn off was weighed by running it into a tank of cold water. The re-heater and jacket condensations were under control, and were kept at a visible and constant height in a glass tube, thus insuring no waste of steam.

Five different tests were made, but on account of accidental and unavoidable wastes of steam in three of them, only two will be quoted here. During the two referred to there was a slight

Digitized by Google

leak of steam from an expansion joint, and on the last test one safety valve was open three-quarters of a minute. These errors are so slight that they can be ignored.

The indicator springs were carefully tested by the writer under steam, and afterward taken to the Navy Yard at Brooklyn and tested, the two results being substantially alike.

The durations of the tests were shorter than is desirable, but the mill hours determined this.

The following is a brief tabulation of the results:

Date, 1894.	JAN. 26, P.M.	JAN. 27, A.M.
Duration of trials	4¼ h.	5 h.
Average steam pressure near engine	159 lbs.	158 lbs.
" vacuum	25.4 in.	25.2 in.
" ratio of expansion by volumes	33 0	33.4
" number of revolutions per minute	76.357	76.603
" piston speed, feet per minute	610.86	612.82
Per cent. of moisture in steam near cylinder	1.90%	1.75%
Total dry steam used	34.089 lbs.	37.677 lbs.
Average I. H. P.	594.79	582.21
Dry steam used per I. H. P. per hour	12.74 lbs.	12.94 lbs.
Average dry steam used per I. H. P. per hour	12.84 lbs.	

It will be seen that these results show a very economical use of steam, and far less than has heretofore been thought possible with compound engines. If the vacuum had been 28 inches, the steam consumption might have been as low as 12.36 pounds on

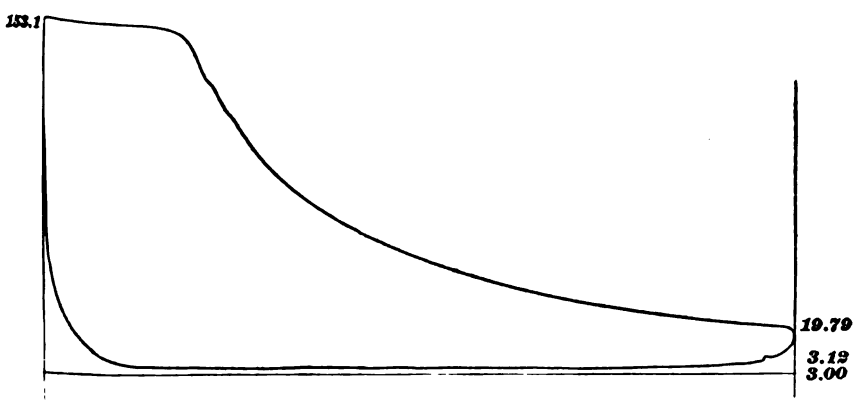

FIG. 57.—High Pressure, Head End.

January 26, P.M., and 12.60 pounds on January 27, A.M., if this had not given rise to any unfavorable set of thermodynamic conditions. The average of these two is 12.48 pounds.

Sample indicator diagrams are given (Figs. 57–60), and in the

Digitized by Google

writer's opinion they have a grave defect in showing a considerable drop in pressure between the cylinders. The writer is aware that this is desired by the designers, but the loss in

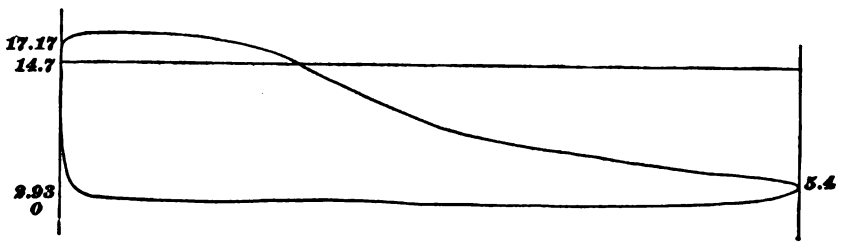

FIG. 58.—Low Pressure, Head End.

effect of the steam to which this gives rise cannot be recovered by any subsequent event. Moreover, this drop exaggerates the difference in the ranges of temperatures of the two cylinders, and increases the loss still further by increasing the cylinder condensation, according to the well-known and fundamental the-

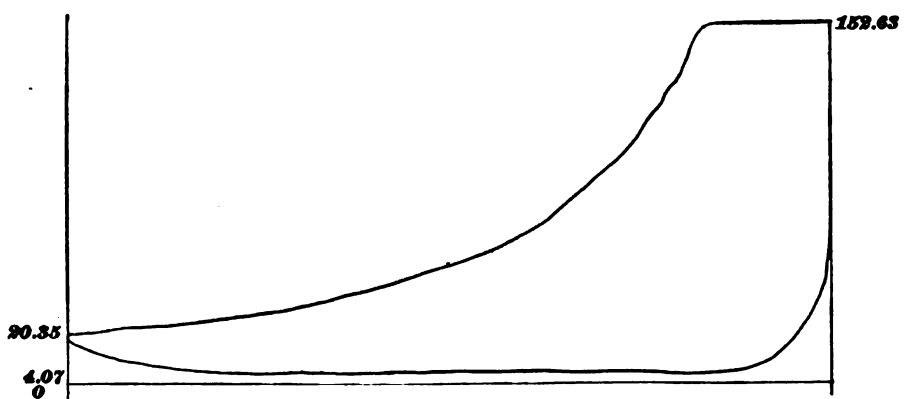

FIG. 59.—High Pressure, Crank End.

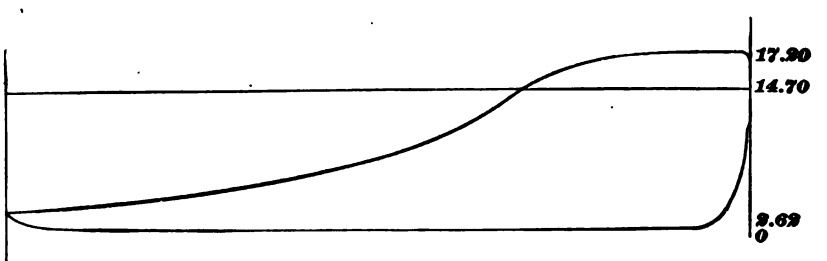

FIG. 60.—Low Pressure, Crank End.

Digitized by Google

ory of the desirability of equal ranges of temperatures. The ranges on January 27 were about 144 degrees in the high-pressure and 82 degrees in the low-pressure cylinders.

Although the performance of the engine is remarkably good, the writer believes that it was realized in spite of great defects, and that it would have been much better if these alleged defects had not existed. The economy, in the writer's judgment, is due to high steam pressure with the resultant high degree of expansion, small clearances, and tight pistons and valves.

DISCUSSION.*

Prof. R. H. Thurston.—The results of short engine trials have always been looked upon with much distrust by engineers, when apparently exhibiting exceptional economy; and the traditional myth of the performance of the "record-breaking" Cornish engine of the last generation, and of that of the S.S. *Thetis*, in which, for the time, fabulous duties are stated as the results of short duty-trials by famous engineers, are a standing admonition to all later experimenters. This reproach certainly cannot be urged against this trial, and the profession is placed under a real obligation to Mr. Leavitt, Mr. Dean, and Mr. Hermany for the admirable example which they have here given of deductions based upon unquestionably representative and extended periods of operation under unusually regular working conditions. The machine should, it is fair to assume, be capable of sustaining this duty indefinitely. A week's work should be as satisfactorily representative of the capabilities of the engine as the work of a year. In this case, the result is a magnificent one, and designer, builders, and officers in charge of the machine have reason for congratulation. I think this "breaks the record" for the compound engine to date. A duty of 140,000,000 for 100 pounds of coal, and of above 150,000,000 for 1,000 pounds of steam, represents, probably, not only the best to date for this class of engine, but, very closely, the practical limit with saturated steam; and 12 pounds of steam per I.H.P. per hour seems the limit for pressures of 125 to 150 pounds.

The usual conditions of economy are here illustrated fully: dry steam, sharp cut-off, full expansion to six or eight pounds absolute pressure, free transfer of heat in jackets, with small

* This discussion covers the topics in two of Mr. Dean's papers: The Trials of the Leavitt Pumping Engine at Louisville, No. 619, and this one to which the debate is appended.

Digitized by Google

cylinder-condensation, no drop between cylinders, and high efficiency of mechanism. The jacket-condensation is high, the friction of mechanism extraordinarily low—for such a heavy engine very remarkably so. I doubt if it has ever been equalled, except by the Worthington class of direct-acting machines.

COMPOUND *vs.* TRIPLE.

Engine.	Leavitt.	Rockwood.	Triple.
Steam pressure absolute	151.60 lbs.	175.50 lbs.	135.45 lbs.
Vacuum	27.75 ins.	25.3 ins.	27.6 ins.
Ratio of expansion	20.40	33.00	19.55
Number of revolutions per minute	18.57	76.4	20.31
Length of stroke	10 ft.	4 ft.	5 ft.
Piston speed per minute	371.5 ft.	611.2 ft.	203 ft.
Cylinder ratio	4 to 1	7 to 1	1, 3, 7
Drop between cylinders	None	About 14 lbs.	.....
Dry steam per I.H.P. per hour	12.156 lbs.	12.84 lbs.	11.678 lbs.
Difference in favor of Leavitt	0.684 lbs. = 5.3%	.....	.....
" " " " Triple	0.478 lbs. = 4%	1.16 = 9%	.....

As presenting an interesting comparison, I have taken the liberty of adding to Mr. Dean's table the figures for the Milwaukee engine, in order to bring especially the relation of compound to triple, as a comparison of the best work in each class permits now, with a conclusiveness never before allowed. In the collection of data thus assembled, we find the triple-expansion machine with lowest steam pressure, lowest piston speed, and lowest ratio of total expansion, gives four per cent. higher economy than the compound, and nine per cent. better than the hermaphrodite machine, and this means, no doubt, that Mr. Dean's statement is perfectly correct; that the triple engine would have proved in the hands of Mr. Leavitt as remarkable in its class as is this compound in its field. The observed difference would be exaggerated, were the triple given the advantage of equally high steam and high piston speed, and it would seem probable that, under the conditions here indicated, the gain by the addition of the third cylinder would be something over five per cent. The loss by leaving it out, and substituting a receiver with free expansion, would seem, under similar conditions, to be likely to prove in excess of ten per cent., a high price to pay for the saving of even a steam-cylinder with its valve-gearing. Mr. Leavitt's success is one in which the whole profession may find cause for pride.

Mr. F. H. Ball.—This paper institutes certain comparisons

Digitized by Google

between the Leavitt pumping engine at the Louisville Water Works, and another engine which is described as the "Rockwood System," and certain deductions are made by the author as a result of these comparisons. Unfortunately for some of us, at least, who are interested in this subject, we have not been informed as to exactly what the "Rockwood System" is. We have had several very interesting reports from Mr. Rockwood, of trials of compound engines, where cylinder ratios larger than usual were used, and many of us, who believe he is on the right track, have hoped that he would elaborate his theory in a paper for presentation to this Society. If the ratios commonly used are wrong, there must be some theory to demonstrate this fact, and to point to some other ratio as being better. Mr. Rockwood has told us, on different occasions, of his engines, with various cylinder ratios, ranging as high in one case, I believe, as 9 to 1. Does his system then consist of simply making cylinder ratios greater than heretofore, and does it cover all cases from the conventional ratio to infinity, or is there a choice in this matter? Mr. Dean seems to think that he has located Mr. Rockwood at 7 to 1. Let us proceed on this assumption.

Referring to the performance of the two engines under consideration, it must be admitted that the results obtained in both cases are phenomenal. Here are two compound engines showing an economy that has seldom been equalled by the best triple-expansion engines, and never exceeded by them but by a very small amount. The Leavitt engine stands at the head, with its 12.15 pounds of water per horse-power per hour, and the Rockwood engine a good second with 12.84 pounds. In comparing these remarkable engines, Mr. Dean has made some sweeping conclusions, which perhaps may be fairly questioned.

On the last page of his paper he uses the following language:

"It tends to show that no advantage arises from a drop in pressure between the cylinders, if evidence were needed of this."

Also, in the closing paragraph, Mr. Dean says:

"It is the writer's opinion that in order to use steam in the most economical manner in a multiple-expansion engine, the expansion must be continuous throughout the series of cylinders (that is to say, there should be no drop between the cylinders), and that compression should be carried up to initial pressure in each cylinder."

I must take issue squarely with Mr. Dean, both in regard to this being a reasonable conclusion from the figures of his test, and also in regard to its being true.

Digitized by Google

Taking the question of compression first, where is there, in the reported data of these engine trials, one iota of evidence on the subject of compression? Here we have two engines, with widely differing cylinder ratios, tested under conditions which are dissimilar in almost every respect. In comparing the two engines, the least conspicuous difference is in regard to their relative rates of compression. Therefore I don't think Mr. Dean is warranted in arriving at any conclusions whatever regarding compression, from the figures of these trials. If his compression theory rests on any other evidence, I hope he will give it to this Society in connection with this paper. As against his theory we have the engine trials conducted by Professor Jacobus, reported at the Montreal meeting of our Society, in which trials all the conditions remained practically constant except compression, and the evidence obtained is conclusive that full compression did not in this case give the best economy. Does Mr. Dean question the accuracy of the data reported by Professor Jacobus, or, if not, how does he make his theory fit these facts?

Coming back to the other part of his opinion, he tells us that "there should be no drop between the cylinders." Presumably this opinion is confirmed in his mind by a study of the data obtained in his trial of the two engines under consideration. Let us see how logical this looks.

First, the great dissimilarity of conditions governing these tests would seem to make it very difficult to estimate the effect of any one of the features of difference, because all of these differences were present continuously during the tests, and each producing its own modification of the result.

Second, let us suppose, however, that the case was different, and that the two engines were exactly alike in every respect except as to the cylinder ratios, and the consequent terminal drop. Let it be assumed also that the conditions of the test were identically the same with both engines. The Leavitt engine, Mr. Dean tells us, represents his theory to the fullest extent. This engine has a cylinder ratio of 4, and, without appreciable drop between the cylinders, maintains a practically continuous expansion to about 20 volumes.

The Rockwood engine has a cylinder ratio of 7, and a considerable terminal drop between the cylinders, and expansion is carried to about 33 volumes. Between these wide extremes there is a vast unexplored wilderness, so far as any information

Digitized by Google

from these tests is concerned. If the economy of these engines was represented graphically with relation to the economy of similar engines with greater cylinder ratios than Rockwood, and less than Leavitt, the result would be a curve on which Rockwood and Leavitt would appear near that part of the curve representing the best economy, and beyond Rockwood at one end, and Leavitt at the other, the curve would turn toward a greater consumption of steam. Suppose Mr. Dean has established two points on this curve with the data from these engines. How can he, without a third point, locate the curve, and say that Leavitt is at the lowest point? He may with propriety say that this engine shows the best recorded performance, and that it is better than the performance of the Rockwood engine which he tested, but it seems to me that he has no warrant from these figures for saying that "there should be no drop between the cylinders," nor that "compression should be carried up to initial pressure in both cylinders," because it is only a surmise on his part that a still better result than either would not have been obtained with some compromise between the two.

The net result of any engine trial is simply the combined result of a great variety of conditions, and hence the uncertainty of attributing a good result or a bad one to any one of these numerous conditions, without having carefully tested for that condition. Anything short of this is mere guesswork, which we are all privileged to engage in as a diversion, but which has little value from a scientific standpoint. Mr. Dean finds a slightly better result with the Leavitt engine than the Rockwood, and guesses that it is due to full compression and no drop between the cylinders. From the standpoint of his theory he finds an unexpectedly good result from the Rockwood engine, and guesses again, "that it was realized in spite of great defects." Following Mr. Dean's example I am inclined to guess that the economy of the Leavitt engine is realized "in spite of great defects," and these defects I should call the full compression and lack of drop between the cylinders, which are the very features he commends as being the full realization of his theory. In this matter of guessing we are both now on record, and can await the verdict of future experiments. The Jacobus tests, already referred to, seem to be good evidence on the subject of compression, and if Mr. Dean has anything else in this line, he will no doubt offer it in closing the discussion of his paper.

Digitized by Google

On the question of terminal drop, my reasons for differing with Mr. Dean will be found on the following pages, which I shall be glad to have criticised and discussed by Mr. Dean, or any member of the Society.

First, assuming that, in a given compound engine, the most economical range of temperature and pressure for each cylinder is known; then is it not the function of each cylinder to effect the most economical use of steam between the extremes of pressure through which it works?

Second, considering the low-pressure cylinder alone, and assuming that a fixed receiver pressure is practically maintained, may not the economy of the low-pressure cylinder be studied apart from the high-pressure cylinder, and is it not true that the economy or wastefulness of the low-pressure cylinder cannot affect in any manner the economy of the high-pressure cylinder under the assumed conditions as to constant receiver pressure?

Third, referring to the high-pressure cylinder, and still assuming a practically constant receiver pressure as before, is it not true that the economy or wastefulness of this cylinder produces no effect on the economy of the low-pressure cylinder, provided the low-pressure cylinder is made to account only for the steam delivered to it from the receiver?

Fourth, assuming that the foregoing questions have been answered in the affirmative, let it further be assumed, for reasons which will appear later, that the boiler pressure is such that a receiver pressure equal to the atmospheric pressure has been found the most economical. Under the foregoing conditions, then, the high-pressure cylinder would perform exactly the functions of the single cylinder of a simple engine without the condenser, because it would receive steam at boiler pressure and reject it at atmospheric pressure.

This brings the subject down to a point where the writer is glad to agree heartily with Mr. Dean in his statement regarding the high-pressure cylinder, when he says that any loss in effect of the steam in this cylinder "cannot be recovered by any subsequent event." If this is true, then, for the best result from this engine, it is necessary that the high-pressure cylinder should develop the highest possible economy when receiving steam at boiler pressure and discharging it at atmospheric pressure, and, as has already been stated, this is exactly the function of the simple non-condensing cylinder; therefore the data obtained in trials of simple

Digitized by Google

engines may be safely applied to the high-pressure cylinder of a compound engine such as we have under consideration. This opens for us a vast field of research among reliable records of simple engine trials, and if Mr. Dean will point to a single case where the best economy from a simple engine was obtained by expanding to atmospheric pressure, and thus eliminating terminal drop, it will greatly fortify his theory. Is it not true, that in every instance where simple engines have been tested at various points of cut-off, the highest economy has always been found when the expansion curve terminated at a point higher than the atmospheric pressure? This terminal drop results in a loss of work, it is true, and this loss increases rapidly with increase of drop, as was illustrated in a paper which the writer presented to this Society at the Montreal meeting; but, up to a certain point, this loss is more than overcome by the resulting increase of mean effective pressure relatively to the cylinder condensation. Terminal drop or free expansion develops heat by internal work in the steam, and thus produces a superheating effect in the steam discharged under these conditions. In the case of a simple engine, this superheating is lost by being discharged into the atmosphere, while, with the compound engine which we are considering, the low-pressure cylinder utilizes this superheat, and therefore a greater terminal drop is permissible than when the cylinder discharges into the atmosphere. For the purpose of utilizing the data obtained from trials of simple engines in this investigation, a receiver pressure equal to the atmosphere was chosen. Whatever can be shown to be true with the boiler pressure and receiver pressure, we have assumed will also be true with regard to other pressures, to some degree, at least. The foregoing course of reasoning is conclusive to my mind that Mr. Dean's theory is wrong, and it is to be hoped that this question may be definitely settled soon, by carefully conducted experiments, having that object solely in view.

Mr. George I. Rockwood.—The two papers presented by Mr. Dean naturally interest me very much, and I trust I may be pardoned if I discuss them at some length; as, though terse (and, I may add, refreshingly so), yet they bear with force upon not only the relative thermo-dynamic merits of the two engines whose economic performance they describe, but also upon the general theory of the high-duty steam-engine.

Let us refer to the contrast said to exist between these two

Digitized by Google

engines. Take, as the first consideration, the steam end of the Louisville engine. This may be reasonably regarded as embodying the best design, and, perhaps, the best mechanical execution which we can hope to secure in an engine having two cylinders of a volume ratio of 1 to 4, working under a steam pressure of 140 pounds, and under pumping-engine (that is, the best) conditions. These conclusions are confirmed by the news in Mr. Dean's paper of its actual performance; an inspection of the indicator diagrams shows that the thermo-dynamic conditions of its operation can hardly be improved.

Consider, second, the Natick compound engine, which embodies in its design the extreme cylinder volume ratio of 1 to 7; it has small clearances and large ports in the cylinders, its pistons and valves are reasonably tight, though manifestly not perfectly so, as I will presently show. It has a relatively large intermediate receiver (a very important adjunct to the engine), which, as Mr. Dean says, contains rather too few brass tubes to produce the best steam-jacket effect, although baffle plates are used to get the utmost possible contact of steam with tubes. In one important point the design of the engine is not on "all fours" with that of the Louisville engine; namely, it has no barrel jacket on the low-pressure cylinder.

Now I do not agree with Mr. Dean that the conditions of operation of each engine are such as to make the comparison of duties actually attained a perfectly fair one from which to judge between the relative economic advantages of the two different systems of designing, which, as machines, no doubt these engines illustrate very well. However, a pretty fair estimate can be formed if only correct inferences are drawn from the data Mr. Dean gives us. Allow me to say here that although the different parts of the Natick engine, such as the details of the cylinders, the details of the valves and valve-gears, and the running parts, and the volume of the receiver of this engine, were decided upon by myself, yet I never saw the engine but twice in my life; once, after it was erected and had been running some months, and once after it was tested. The details of its application to the place where it now is, I had nothing to do with.

I think, with the author, that the jacket circulation of this engine is perhaps poor; that the re-heater does its work under adverse conditions; that the vacuum was not so good, by an amount which I estimate from the papers at 1.5 pounds, as in

Digitized by Google

the case of the Louisville engine trial; that the large steam-pipe from the Babcock & Wilcox boilers—extending out of doors for hundreds of feet—leaked more or less at the flange joints. But all the conditions enumerated are adverse to the best results by this engine as compared with the pumping-engine. On the other hand, it is urged that this engine runs at nearly twice the piston speed of the Louisville engine. This point has hitherto been considered of much theoretical advantage. I question it, however, especially in view of the many recent tests of slow-speed steam-jacketed engines in which the economy seemed really improved by reason of that slow speed. The larger sizes of the cylinders of the Louisville engine should more than compensate for any fancied advantage to the Natick engine, due to its faster reciprocations.

The Natick engine had at cut-off in the high-pressure cylinder 20 pounds more steam pressure to its credit than the Louisville engine, and perhaps this is a fair point to raise as a disadvantage put upon the Louisville engine, though I believe that engine would have done no better with the extra 20 pounds than it did do, owing to too small a low-pressure cylinder.

Now for an estimate of the real advantages of either system over the other, as revealed by Mr. Dean's tests.

First, he makes out an apparent advantage in favor of the Louisville engine of 5.3 per cent. I ask, is this figure to be taken as representing the true comparative economies of the two types of compound engine? I believe it is not, and for the following reasons, partly specific and partly general.

At the trial of each engine the M. E. P. referred to the low-pressure cylinder, and the degree of vacuum was: Louisville engine, 24.9 pounds M. E. P., and 13.4 pounds vacuum; Natick engine, 17.46 pounds M. E. P., and 11.9 pounds vacuum. If the load on the Natick engine could have been enough more to have made use of a vacuum of 13.4 pounds instead of only 11.92 pounds, and this decrease in back pressure of 1.5 pounds could have been effected and so added to the M. E. P. of 17.46 pounds, as is entirely possible, and as we should not do on paper, if the proper effect of the better vacuum on the economy of the Natick engine is to be understood, then ($1.5 \div 17.46 = 8.6$ per cent.) 8.6 per cent. more work done by 12.74 pounds of steam would immediately result. The quantity 12.74 pounds is now 108.6 per cent. of the amount necessary to do one horse-power of work, so 100

Digitized by Google

per cent. would be $12.74 \div 108.6 \times 100 = 11.75$ pounds steam as the true comparative economy of the Natick engine, as against 12.16 pounds, that of the Louisville engine, a difference in favor of the Natick engine of 3.5 per cent. I will not try to estimate the harmful effect on the Natick engine duty of poorly piped jackets, insufficient brass tube area in the receiver jacket, or the error in determination of its actual performance due to leakage of steam from the main steam supply-pipe, etc., although it is certainly something, and perhaps considerable. But I should like to point out that there was a leak by the steam valve on the crank end of the high-pressure cylinder, shown pretty clearly by the diagram in Fig. 59, of the paper on the Natick engine.

The point of cut-off shown on this card is (clearance reckoned in) at .19 of the stroke. The point of cut-off shown by the other card is at 22.4 per cent. of the stroke. One would expect to find a lower terminal pressure on the card having the earlier cut-off, instead of which the card showing the fewest expansions gives the lowest terminal pressure. I estimate the rise in pressure due to leakage to have been at least five pounds. There appears to have been a loss of steam on the other stroke also, though much less, as I estimate the rise in pressure due to leakage to be as much as 1.5 pounds. Plainly the Natick engine suffers a loss of efficiency by reason of leaky valves, which is not and cannot be correctly estimated. Thus I have shown that, if the effect of all these disadvantages were to be allowed for, the difference in steam consumption in favor of the Natick engine would be materially larger than 3.5 per cent. I believe I have thereby shown that these data also reveal the engines of the style of the Natick compound as better than ordinary compounds.

Mr. Dean touches upon the theory of the successful operation of the Natick engine in these words: " . . . The economy of the Natick engine is due to high steam pressure with the resultant high degree of expansion, small clearances, and tight pistons and valves." He might have added, "and to the relatively very large port areas," as there is probably no other kind of engine extant having so little clearance space.

Mr. Dean also says, " Although the performance of the engine is remarkably good, the writer believes that it was realized in spite of great defects," but how does Mr. Dean harmonize these apparently conflicting ideas? If this engine does remarkably well

Digitized by Google

in spite of grave defects, then let us study somewhat the nature of the alleged defects, to find out if such they really are.

To define the Natick engine as simply as possible, it is a triple-expansion engine with the intermediate cylinder omitted, and with an intermediate receiver substituted therefor.

The notion that the only effect of an enlarged intermediate reservoir between the first and third cylinders is to drain water out of the incoming steam and to heat the steam (in case a steam-jacket is used) is one which appears to have taken root in some minds, and I would like now to uproot it. That I may explain clearly what I mean, allow me to refer you to the combined diagram of the Louisville engine, Fig. 56 of Mr. Dean's paper. It may be noted there that no drop occurs at the terminal of the high-pressure card. But what happens on the return stroke? The pressure falls rapidly to a point about in the centre of the back pressure, at least eleven pounds lower than the terminal pressure of the high-pressure diagram. Is this to be classed as "drop" or not? and does it increase the total range in temperature in the high-pressure cylinder? While the bugbear, "drop," is variously defined, still, as it brings with it all the disadvantages of drop, in my view, it is "drop;" it does tend to increase the temperature range in both cylinders.

Now, we read the receiver volume was about seven-eighths of the high-pressure cylinder volume. What would be the effect on the back-pressure line of the high-pressure cylinder diagram if, instead, this volume were, say, three times or more the volume of the first cylinder? Would not the effect be to cause nearly all the "drops" to take place at the terminal of the high-pressure card? It would cause a nearly straight back-pressure line in the high-pressure cylinder, at a pressure equal to the lowest pressure now occurring in the high-pressure cylinder. This would give no greater temperature range in the first cylinder, but it would, on the other hand, considerably reduce the range in the second cylinder. Not a pound of pressure would be sacrificed at cut-off in the second cylinder, and the work done by the engine would be slightly increased, although, theoretically, there would be a slight loss of area at the toe of the high-pressure card of the combined diagram.

I ask, would it not be a good thing to do, to lower the initial pressure and temperature in the low-pressure cylinder if unaccompanied by any corresponding increase in temperature range in the high-pressure cylinder? But all this would be the result

Digitized by Google

of increasing the size of the intermediate receiver, and it can be obtained in no other way. The mechanical advantage of not striking so heavy a blow on the large low-pressure piston is also considerable, though apart from the phase of the question which I would like to present.

Now, in the test of the Natick engine the receiver pressure was carried relatively higher than I would desire it to be, owing to the fact that it was somewhat underloaded; but still the receiver volume is nearly or quite as large as that of the low-pressure cylinder, and so it has the effect of decreasing uniformly the back-pressure on the first cylinder, in this case fourteen pounds. Thus it makes the range in temperature in the large cylinder also much less, and—please mark this statement—thereby contributes to the economy of the engine as a whole. How does it do this? Let this question be answered by a consideration of the grounds upon which the "well-known and fundamental theory of the desirability of equal ranges of temperature" rests.

This theory asserts that in each of the cylinders of a compound engine an equal amount of cylinder condensation will occur, provided that the range in temperature in each is equal. Could anything be more erroneous on the face of it than that proposition? What account does it take of the fact that the low-pressure cylinder of, say, the Louisville engine has four times the exposed area on its piston and cylinder-head faces that the high-pressure cylinder has? A moment's consideration should show that a unit of area in either cylinder exposed to a degree difference in temperature will, *other conditions being identical*, condense an equal amount of steam, unless, indeed, there be some at present unknown dynamic influence upon the incoming steam tending to augment condensation.

Thus it seems to "stand to reason" that in the case of the Natick engine, if the ranges in temperature were maintained equal in each cylinder, with a difference in piston areas of 7 to 1, there would constantly be many times the condensation occurring in the first cylinder occurring all the time in the second cylinder.

It appears to me plain that the maximum efficiency of the entire engine is reached when there is an equality, not of temperature ranges, but of *amounts of cylinder condensation!* the condensation occurring in the first cylinder being just sufficient to take, after reëvaporation at exhaust, the place of the condensation bound to occur in the succeeding cylinder. Thus, as Dr. Thurston

Digitized by Google

has well said, the most wasteful cylinder in series is the measure of the loss from cylinder condensation; plainly, we can do no better than to make each cylinder equally wasteful by adjusting the range in temperature in each cylinder so as to produce this result.

There is but one way to secure an equality of condensation in the two cylinders of the Natick engine, and that is, as I have just attempted to show, by employing a very large intermediate receiver.

This will of necessity produce some drop at the terminal of the high-pressure card, whereas the intermediate cylinder would prevent it utterly. To the extent that "drop" is a net loss the use of an intermediate cylinder would be a gain, for I realize fully that part of this loss "cannot be recovered by any subsequent event." But after we have admitted this fact we are still no wiser than before; we must arrive at some idea of the net extent of the loss by "drop," that is, the net loss "after all the bills are paid," to use a business man's simile, and then, if we find it to be serious—say, something over two or three per cent.—we can make use of the intermediate cylinder.

Now, it is apparent from an inspection of the combined diagrams (Fig. 56) that one loss due to making use of an intermediate cylinder is the loss due to wire-drawing in getting the steam out of the first cylinder and into the second. This of itself is a greater loss than the triangular area lost through ordering the point of cut-off at a point on the entire expansion curve that is lower than the terminal pressure in high-pressure cylinder —a fact which is the cause of the drop in the Natick engine. Then a certain, and relatively considerable, portion of the toe of the high-pressure diagram is so much lost work, owing to the fact that it is too little to overcome the friction of the engine, as has been pointed out by Professor Gale.

My belief is that when such practical considerations as those just given are arrayed on the credit side of "drop"—and, be it understood, I here allude to a small degree of drop, say not over 30 pounds—such as we can get along with where the expansions are so many as in the Natick engine—the preponderance of power felt at the piston-rod will be found to be in favor of the two-cylinder rather than the three-cylinder engine, where pressures of 160, 170, or 180 pounds are to be obtained.

I have dealt with the idea that the office of the receiver in the

Digitized by Google

Natick type of compound engine is to produce drop in pressure at the terminal of the high-pressure cylinder stroke; that there is practically no loss from "drop" in that engine; and that in any compound engine it is necessary to sustain, not an equality of temperature-ranges in the two cylinders, but an equality of condensations. I would now like to look at the question in another light, and will try to show that, leaving the low-pressure cylinder quite out of the account, there is still no greater loss from cylinder condensation in the Natick engine, even though the intermediate cylinder is not employed, than would be the case were it in use.

Suppose the engine to have an intermediate cylinder of a diameter of, say, thirty or thirty-two inches; that is, give the engine what would be a standard intermediate cylinder.

Suppose the three points of cut-off to be so adjusted as to give equal ranges of temperature in each cylinder. We would then have the kind of practice desired by Mr. Dean.

The relative areas of the high and intermediate cylinders are to each other as 1 to 3, and the ranges in temperature are presupposed equal.

Now it seems to me that, in order to prove that the intermediate cylinder is an "ameliorator" of the loss in the entire engine due to cylinder condensation, it must first be shown that less cylinder condensation, by a considerable amount, gets by the intermediate piston without doing work in that cylinder as steam than would escape from the high-pressure cylinder, were it to be subjected to twice the range in temperature happening when both cylinders are in use, by the instrumentality of an enlarged receiver. Perhaps it is unnecessary to take time to show that the effect of either the intermediate cylinder or of the large receiver upon the conditions under which the low-pressure cylinder takes its steam is identical in either case, so that, as I have said, that cylinder may be left out of account, in calculating the deleterious effects on the economy of the engine by reason of leaving out the intermediate cylinder. The question, therefore, is: "Does more condensation and reëvaporation take place in the high-pressure cylinder—having twice the temperature-range and one-third the area of the intermediate cylinder—than takes place in the intermediate cylinder, if used?" To ask this question is also to answer it, I think, in the negative, in the light of what has been said above.

To return to the author's indictment, that the Natick engine labors under great defects; I have mentioned that many of the

Digitized by Google

defects, such as defective jacket circulation and defects of that order, are of themselves a sufficient cause of the difference in economy actually observed between the two engines; I agree fully with him in the abstract proposition that the highest economy to be realized in the perfect engine—that is, in one having non-condensing cylinder surfaces and frictionless parts—is to result from the combined influence of two conditions—using a volume of steam at the highest possible pressure, expanded the utmost number of times.

The Natick engine is the embodiment of this principle, so far as the principle can be embodied. It uses steam of a higher pressure than does any other compound mill engine of which I have any knowledge.

It expands a volume of it sixty per cent. more times than the ratio of expansion in the Leavitt engine—the ratio being 1 to 33 for the Natick engine and 1 to 21 for the Leavitt engine. If the Leavitt low-pressure cylinder had been fifty per cent. larger it would have enabled the expansions to be on a par with the ratio in the Natick engine; but the increase in economy would only result, I venture to predict, if an enlarged receiver were also used.

But as to the size of the receiver and the volume-ratio in the Natick engine being great defects in its design, I confess, for reasons stated, I cannot see it quite yet in that light, and mistrust I shall never be able to see it so, unless I am given more information of a kind contrary to that now in my possession.

There is one other minor and *last* aspect of the matter that I might bring briefly to your attention by quoting the trite saying: "One swallow does not make a summer." This Louisville engine has not only broken all previous records, it has left them out of sight; they are not even in the race at all.

Note the performance of the Pawtucket compound pumping engine; note that of the great Allis tandem compound at the Plymouth Cordage Works—fifteen or twenty per cent. less economical, though under fully as good conditions. Note that of the triple-expansion Laketon pumping engine, working with steam at one hundred and fifty pounds, and yet fifteen per cent. less economical. Note that of the European triple-expansion mill engine, the Sulzer Corliss, of large size and splendid design, yet outdistanced by this Louisville compound six per cent. In such company I confess I believe the performance of the Natick engine—improved upon by itself, as it doubtless could be, several per cent.

Digitized by Google

—is not unsatisfactory enough to warrant an impeachment of its design, especially when four other engines of the same type have all given equally good or better accounts of themselves; whereas we cannot, with certainty, get a plain compound Corliss *mill* engine to do as well as fourteen pounds, try as we will.

Dr. Chas. E. Emery.—It is known by many present that several of the problems under discussion were examined by me about twenty years ago. The lessons then learned have not lost their force in many respects. The later engineers have had an opportunity of experimenting with higher steam pressures and more perfect mechanism, and have obtained much more economical results; but it is a question if such results are not due entirely to these two features. I class reduced clearance with more perfect mechanism, for the reason that the mechanical details of the engines were substantially the same then as now. There is a tendency, however, to theorize, as to features other than those mentioned, and we are fast reaching a condition of ultra theory and ultra expansion, like that developed for the older type of engines during the war, when the *Winooski* and *Algonquin* ran their celebrated dock race here in the city of New York. It will be recollected that on the last-named vessel 15 to 20 expansions were attempted in a single cylinder with 80 pounds steam pressure, while, in the other vessel, designed by Mr. Isherwood, 45 pounds steam pressure was used, cut-off at about $\frac{6}{10}$ of the stroke, but with a valve moving so slowly that the virtual cut-off was at about $\frac{4}{10}$. The low-pressure steam machinery pulled more steadily than the other, used *less* steam per horse-power, and did not break down, whereas that using the high pressure did. This showed that there was more to the question than mere theory. In one case the expansion was carried to an extreme unwarranted by the conditions, so that the more simple machinery, with less expansion than was warranted, gave the better result. History repeats itself; and very similar results are coming to light in relation to triple compound engines compared with compound engines, which show it is time to call a halt and ascertain what points have been actually settled by previous practice. In discussing Mr. Webber's paper * I called attention to the very low mean pressure in the large cylinder, and made the statement that the work done in the intermediate cylinder could have been

* *Transactions* A. S. M. E., Vol. XVI., p. 55.

Digitized by Google

transferred to the larger cylinder, and greater economy thereby secured in that cylinder. It follows that, even if the gain in the low-pressure cylinder was balanced by a corresponding loss in the high-pressure cylinder, the economy of the simpler compound engine would still be as great as that of the triple compound. I was very much surprised to hear the statement, in Mr. Rockwood's discussion of the present paper, that he would have preferred to have the engine which he designed operate with as low a mean pressure in the low-pressure cylinder as I had criticised. We ought by this time to know all about the results with low-pressure steam, as very many experiments have been made with it. Mr. Isherwood's books are full of such experiments. Those made on the *Michigan*, at Erie, Pa., settled many of the questions, though others are equally applicable, more particularly those with which the speaker was connected, known as the "Novelty Iron Works Experiments," of which a table has been published, without explanations, in *Appleton's Cyclopædia of Mechanics*, and Vol. II., American edition, of *Weisbach's Mechanics*. The general result is well known. Engines using 15 pounds of steam were more economical than those using 5 to 10 pounds; 25 pounds pressure was found still more economical, and 40 pounds more economical yet. The last-named pressure is at present out of the question for the large cylinder of a compound engine. In fact, there would be some gain by compounding with such pressure, but in regard to using steam at a pressure below that of the atmosphere, and at 10 or 15 pounds above it, there is no question whatever; the latter is much more economical. The terminal pressure in a low-pressure cylinder should be high enough to insure thorough drainage by the sudden expansion during the exhaust, the gain in this way being greater than the loss caused by reducing the expansion in such cylinder. In the design of modern compound and triple compound engines we should start with the maximum already obtainable with a low-pressure cylinder; that is, do as much work therein as has proved economical in low-pressure practice, then obtain as much work with the steam above that pressure as is practicable. The result will be that more work will be done in the low-pressure cylinder than in the high-pressure, as is, indeed, shown by the tests of the Leavitt engine, now under discussion. This does no harm. We have simply to provide for it in the design, even if two low-pressure cylinders are used, as in some forms of compound engine.

Digitized by Google

I wish to thank Mr. Rockwood for the very earnest work he has done in developing this question of compound *vs.* triple compound engines, though I do not think he is right in making such an extremely large ratio of capacity between the high and low-pressure cylinders. It is also a source of gratification that even better economical results have been obtained with a Leavitt compound engine, and as the latter result was secured with a less number of expansions, and with a larger proportion of the work done in the large cylinder, it indicates the correctness of the principles above stated.

The general conclusion appears to be that we cannot as yet carry the steam pressure high enough to make the triple compound engine of value in a commercial sense. It is true that the best triple compound engines have given a little better results than the best compound engines, but fairly large percentages of gain are for such economical engines very small quantities, and are easily wiped out by very trifling derangements, such as small leaks, want of care with jackets, etc., and are readily balanced by other items of cost, such, for instance, as a little higher wages of the engineer or the greater interest due to increased first cost. The coal is only one of the several items of cost in operating a steam-engine, and all must be considered in making a commercial balance.

In making these remarks I wish to encourage rather than hinder any attempts to obtain the very best results possible. The chairman will realize that the anthracite supply is limited and that that kind of coal will appreciate in price, so the very extreme economies will be valuable in the future, even if not warranted by commercial considerations in the present.

This discussion of compound *vs.* triple compound engine will be more valuable than seems at first sight. I have already called the attention of the American Society of Naval Engineers to the subject, with a view of saving the weight and to some extent the space occupied by the intermediate cylinder on board ship. There the elements of space and displacement are of the greatest importance, and, moreover, the full power runs are comparatively so short that some economy can be sacrificed under such circumstances, if economical results are obtainable at ordinary cruising speeds. It is true that the three-crank system of the triple compound engine is a desirable feature in producing smoothness of working, but it need not be sacrificed if a return be made to

Digitized by Google

compound engines, as two of the cylinders can be low-pressure cylinders, as was, indeed, a common practice when lower steam pressures were employed. The system of doing more work in the larger cylinders, previously recommended, aids in the solution of this problem, though doubtless there will be some difficulty in distributing the load equally to the three cylinders. The system adapts itself very well to the conditions of varying loads obtaining on board ship, and I have no doubt that in due time valuable developments will be made in this direction.

Mr. William Kent.—I think that in years to come engineers will read with great pleasure this paper of Mr. Dean's and the discussion by Mr. Rockwood, supplemented by D. Emery's discussion. As the matter stands now we can say we have learned that the Leavitt engine, according to Mr. Dean, is about five per cent. superior in economy to the Natick engine, and according to Mr. Rockwood, if we make the proper allowances, the Natick engine is eight per cent. better than the Louisville engine. Add these figures together and divide them by two and we have the two engines very nearly alike. Mr. Rockwood mentioned in his remarks the Pawtucket engine, and it was also in my own mind at the time, as to what is the cause of the difference in economy between the Louisville engine and the Pawtucket engine. The Pawtucket engine had 16 expansions as against 20 in the Louisville and 33 in the Rockwood engine. The Pawtucket engine had 120 pounds of steam pressure as against 151 in the Louisville and 175 in the Natick engine. The Louisville engine had high vacuum as compared with the Pawtucket. The Pawtucket engine had only 240 for piston speed as compared with 371 for the Louisville and 611 for the Natick. It is probable that if the Pawtucket engine had been given 150 or 175 pounds pressure of steam, and if the expansions had been 20 or 33 instead of 16, it would have shown a better result. So that the Pawtucket engine might stand pretty near the top if you would only give it the advantage these other engines had in steam pressure and expansion and piston speed. We cannot make a satisfactory comparison between the Natick and the Louisville engines, because the conditions are so different. The Louisville engine had 20 expansions. Was that the best practice for that particular engine? The Natick engine had 33. Was that the best expansion for that particular engine? The steam pressure of the Natick engine was 175 against 150 in the Louisville engine. Were these pressures

Digitized by Google

the best for those particular engines? Of course, the vacuum in the Louisville engine was best, at all events, and the Natick engine would, no doubt, have been glad to get such a vacuum. But I say we cannot satisfactorily determine which is the best form of these two engines until they are both tested with the same steam pressure and vacuum, and until each engine is tested with varying expansions, until they find the expansion best suited for that particular engine.

In regard to D. Emery's remarks, he makes a point about the compound *vs.* the triple-expansion engine for marine practice. It is strange that, about 1882, the very engine he speaks of, the compound engine with three cylinders, was the favorite engine, and it has paid since that to take these out of the ships and substitute the triple-expansion at great cost, a great economy resulting from the change, although I admit that putting in boilers of higher steam pressure might have been largely the cause of the economy. We cannot determine that, however, because we have not had a trial of that particular form of compound engines with high pressure and with moderate pressure steam. We do not know to-day what that engine might have been capable of doing with steam of one hundred and seventy-five pounds pressure, because it never was tried.

Mr. R. S. Hale.—I should like to ask Mr. Dean what was the slip of the engine, as determined by weir measurement. Last summer Mr. Brackett spoke to me of something like seven per cent., and if it was as much as that, would it not change considerably the friction of the engine and the duties, as figured, of the plunger displacement?

Mr. Platt.—I would like to ask for some information with reference to the boiler practice at this mill engine test. The contrast between the two tests of five hours and one hundred and forty-four hours, without any explanation with reference to the boiler practice, seems to me to leave something lacking.

Mr. Dean.—The tests of these engines as they are reported were simply a feed-water test, and the water in the boilers was at the same height at the end of the test as at the beginning, and the steam pressure was the same. That, with a little experience, can always be brought about.

That part of the test of the Louisville engine referred to by Mr. Hale was not touched upon by me in this paper, for the reason that I felt more interested in the steam performance than in any

Digitized by Google

other part, and thought probably other people would also. The slip of the Louisville engine is remarkably large. It was so large that it took us some two or three days to try to find out the reason, and it averaged about 6.8 per cent. We determined the data for every day. In fact, we made six different consecutive tests; that is to say, as I just stated, we determined the data each day separately, and it came always about 6.8 slip. We were somewhat suspicious of our weir. But all of our suspicions, so far as we were able to see, proved to be groundless. We several times stopped the engine, and shut valves in the main, and noted the flow of the water in the chamber at the weir, and we also did that when the valves were not shut, so that it all came on the pump-valves. At such times the flow of water was about one per cent. of the amount of the plunger displacement. The only way that we can account for this unusual slip is this—that the pump-valves were metallic valves seating on metallic seats, and the Ohio River water carries considerable sand in it, and those valves in a short time scored themselves out more or less, and valves which were taken out seemed to be gouged out as it were on one side, and not all the way around. But, of course, we can hardly imagine a pump-valve seating squarely. There is a spring, as a general thing, to press it down, and that spring will probably carry down one side a little quicker than it does the other, and of course all pump-valves must be loosely fitted so that they will be free to move under all conditions. It looked as if the valve in general struck on the edge and gouged the seat out, so that we thought that probably a good deal of the slip was to be accounted for in that way; and in listening to the pumps, putting one's ear right against the pump chambers, there was a sound which did indicate that there was water going through somewhere—it was rather difficult to tell where—at the time when the water was being forced up into the main. But I do not know that I can throw any additional light on that subject. The whole matter was an astonishment to all of us, and we used a good deal of time to try to find out what the trouble was. That, however, would not, as Mr. Hale suggests, affect the friction of the engine.

Now that I am on my feet I will speak of some other interesting things which were done with that engine, and which are not mentioned in the paper. The result was so unusual that I thought I would go to rather unusual pains to corroborate it, and in the report—I have forgotten whether I stated it in this paper or not

Digitized by Google

—but in the report of the test it is mentioned that the condensation in the jacket was determined by passing it through a Worthington meter, which meter worked with remarkable steadiness. It always showed about twenty-five cubic units per hour; whether you took the data on the first day, or third day, or last day, it was just the same. Immediately after the trial I calibrated that meter for some three hours. I was hardly content, however, with that calibration, and after I got home I wrote to the chief engineer of the water-works to ask him to determine that condensation for me by actually weighing the jacket condensation, and also to run another test of twenty-four hours' duration; and I will say here that Mr. Hermany had a very competent chief assistant, who helped me in this test and in whom I had the utmost confidence. He fully appreciated the necessities of the case. Persons who have read the account of the test in the report will remember that the amount of water by the feed-pump was determined by computing it from the rise of temperature of the water before it was heated by this pump exhaust, and after. But in this supplementary test which I asked Mr. Hermany to make, the exhaust was turned out of doors, and the feed-pump was run by the donkey boiler, and the jacket water was actually weighed throughout the twenty-four hours, and the separator condensation also. This jacket condensation differed from that which I had determined by .06 of one per cent. The head of water on the pump was almost identical, the revolutions were just the same, and the indicated horsepower figured out precisely the same as on the official test. On each of the six days of the test the amount of feed-water used by the engine was 187,000 pounds, almost without exception. It differed only a small number of pounds. The greatest difference that we found from my results was the separator condensation for the twenty-four hours. I made it 3,900 pounds in twenty-four hours, and he made it 2,800. There was a difference, you see, somewhere about one-half of one per cent. of the total feed. We are dealing with such large quantities that it is of no importance. He also ascertained for me the two jacket condensations separately, and the re-heater condensation separately, but simultaneously. All of the data which are given in my report have been so thoroughly corroborated and reproduced day after day on that test that they are singularly to be relied upon.

* Replying to Mr. Ball, as to the effect of compression on

* Author's closure, under the Rules.

Digitized by Google

economy, the experiments to which he refers as having been carried out by Professor Jacobus were made on a relatively low-grade engine. By that I mean a single-valve engine with large clearances. Results from such an engine, I believe, are little or no guide in determining practice with high-grade engines. By high-grade engines I mean four-valve engines with small clearances. With low-grade engines some thermo-dynamic phenomenon with high compression may creep in which overpowers others. In the high-grade engine there is less room for erratic phenomena, and we can work more closely to our theories and obtain corresponding results. The Leavitt engine is worked out in detail close to the theories, and the results are given in my paper.

Mr. Ball's arguments do not appeal to me, either with reference to compression or to drop.

With reference to drop, I will simply say that the modern engine is made to use steam expansively. It may be done in one cylinder, but it has been found that it is much more economical to divide it up into steps, each cylinder performing a step. Why should not one step begin where the preceding one leaves off? I confess that I never have been able to see.

As I understand it, Mr. Ball claims advantage in drop, because it superheats the steam. If we assume steam of 45 pounds absolute to drop to 25 absolute, and thus to drop 20 pounds, the superheat will be $\frac{1165.6 - 1155.1}{0.48} = 21.87°$. This superheat would not, however, exist, for the released heat would find itself in wet steam, and therefore the supposed benefit is all but *nil.*

The amount of heat added to a pound of steam of the lower pressure would be $1165.6 - 1155.1 = 10.5$ B. T. U., or $\frac{9}{10}$ of 1 per cent., and this, in turn, would dry out $10.5 \div 922 = 0.013$, or $1\frac{13}{100}$ per cent. of moisture in the steam, the benefit of which is unknown, but small. In order to secure this small benefit Mr. Ball would lose expansive energy of the steam, the value of which is exactly known, and is represented by 1 + hyp. log. $\frac{45}{25}$ = 1 + hyp. log. 1.8 = 1.5878 per pound of steam. I prefer to get this work out of the steam, especially when its quality is restored by a reheater.

Replying to Mr. Rockwood, I think it is not unreasonable to suppose that the whole engine at Natick was built in accordance with the Rockwood system, and therefore to be criticised as such. I am somewhat in sympathy with Mr. Ball in not understanding

Digitized by Google

what the Rockwood system is. If it is a ratio of 7 to 1 it is seldom made by him, and has in a general way been put into English steamships several years since. As for tests of triple engines with the intermediate cylinder cut out, the columns of *Engineering* contain the results of tests which are disastrous to the cut-out.

Mr. Rockwood states that the steam-pipe leaked at the joints at Natick. This is not true, except at a slip expansion joint, and the amount was so slight as to make no perceptible difference in the result.

The shortness of the tests of the Natick engine are unfavorable to it compared with the Louisville.

I agree with Mr. Rockwood that, so far as I know, the advantage of high piston speed is mythical, and cuts but little figure in the comparison made by me.

The probable greater economy which would be due to a better vacuum with the Natick engine was estimated by me by ascertaining how much more area would have been given to the low-pressure indicator diagram thereby, and the resultant increase in work done by the steam.

Mr. Rockwood entirely misinterprets the sag in the exhaust line of the high-pressure indicator diagram of the Leavitt engine, except that it increases the range of temperature in that cylinder. He, however, makes no allowance for the fact that this increase in range is corrected by the rise in pressure in the receiver and high-pressure cylinder after the closure of the low-pressure inlet valve. This correction is intentional, both to avoid drop in pressure and net drop in temperature.

To make myself understood with reference to drop I will define it. In general, drop is a fall in pressure between the end of expansion in one cylinder and the beginning of expansion in the next, and, specifically, in a tandem or Leavitt engine, it is the fall in pressure between the terminal pressure in one cylinder and the initial pressure in the next. The only unavoidable drop in such engines is due to the work of moving steam from one cylinder to the other. In the Leavitt engine, expansion in the second cylinder begins with the beginning of the movement of the piston from the end of the stroke, and no fall in pressure can occur until piston movement begins; while drop is unresisted expansion, or fall of pressure without piston movement and without doing work, and is therefore a dead loss, except in so far as the heat released produces some superheating. It must not be overlooked

Digitized by Google

that true expansion takes place with the whole stroke of the Leavitt low-pressure piston, only that the law changes after low-pressure cut-off.

Mr. Rockwood is wholly wrong in supposing that a larger receiver would produce drop in the release end of the high-pressure diagram. This has nothing whatever to do with it, as a drop, or its absence, will be determined by the low-pressure point of cut-off in either a tandem, Leavitt, or cross-compound engine. If valves are properly set in either of these types of engine, and the cut-offs of all but the first cylinder are not affected by the governor, and a permanent *régime* has been established, neither will ever produce drop or loops in the indicator diagrams, except the always unavoidable drop above mentioned, and which increases with speed. This is furthermore entirely independent of the receiver volume, or point of cut-off in the high-pressure cylinder. The large receiver will diminish the temperature range in the high-pressure diagram, and is so far beneficial unless the correction above referred to is wholly effective. It will, however, not affect the range of temperature in the low-pressure cylinder, as Mr. Rockwood claims, because the initial and back pressures in this cylinder are not affected by the receiver.

My understanding of the effect of equal ranges of temperature in cylinders is not, as Mr. Rockwood says, that "an equal amount of cylinder condensation will occur," but that a minimum total condensation will occur. Although I cannot now give an absolute proof of this, I am satisfied to hold this view for the present. The theory that Mr. Rockwood tenaciously advances, viz., that equal range takes no account of the amount of cylinder surface, and that the large cylinder would necessarily condense much more than the small, is inconsistent with facts, for we know that in every engine the condensation is greatest in the small cylinder.

Finally, after all has been said and written, the fact remains that an engine with a cylinder ratio of 4 to 1 has surpassed in economy an engine with 7 to 1, carrying a higher steam pressure.

Digitized by Google

DCXXI.*

STRESSES IN THE RIMS AND RIM-JOINTS OF PULLEYS AND FLY-WHEELS.

BY GAETANO LANZA, BOSTON, MASS.

(Member of the Society.)

In November, 1892, a paper upon this subject was presented to the Society by Mr. James B. Stanwood, in the discussion of which I called attention to certain stresses in the joints of built-up fly wheels, which are very commonly disregarded by builders of engines, and which Mr. Stanwood had not mentioned. †

In December, 1893, Mr. Stanwood presented another paper on the subject, in the discussion of which I was unable to take part. ‡

Both of his papers, and also my discussion, were avowedly partial, and only pretended to take into consideration certain ones of the existing stresses, while certain assumptions were made in his papers which were claimed as probable, but of which no proof was attempted.

While it is impossible, without first ascertaining certain facts, by means of a line of experimental investigation which has never been pursued, to make an exhaustive treatment of the subject, nevertheless, in the present paper, I shall attempt, as far as I can, to point out the causes of stresses, and to explain how to calculate those due to the action of centrifugal force. Moreover, while I shall refer to the two papers of Mr. Stanwood, and to my discussion on the first one, I shall, for the sake of clearness and consecutiveness, write this as an independent paper, beginning *ab initio*.

* Presented at the New York meeting (December, 1894) of the American Society of Mechanical Engineers, and forming part of Volume XVI. of the *Transactions*.

† *Transactions of the American Society of Mechanical Engineers*, Vol. XV., p. 251; No. 515.

‡ *Transactions of the American Society of Mechanical Engineers*, Vol. XV., p. 147; No. 565.

Digitized by Google

The subject may properly be divided as follows:

1. What are the stresses in the rim and the rim-joints due solely to the action of centrifugal force on the wheel itself?

2. What are the stresses in the arms due to the same cause?

3. What are the stresses in the arms due to the pull of the belt or ropes, or to the pressure of the teeth of the gears when driving, as well as the inertia of the wheel in starting or stopping suddenly?

4. What are the stresses in the rim and rim-joints due to the same causes?

This paper will deal at length with 1 and 2, or, in other words, with the stresses due to centrifugal force only. At the close of the paper, however, I shall cite a few experiments and make a few remarks bearing upon the stresses mentioned in 3 and 4, as they are doubtless of great importance, and probably considerable in amount in most cases. Confining ourselves, therefore, to a study of the stresses due to centrifugal force, we note the following two cases:

1. When the pulley is cast in one piece.

2. When it is cast in sections united by bolts or other fastenings.

The first case does not include the largest wheels, for, it being impracticable to cast them whole, they are always cast in sections and bolted together. However, the considerations that affect the pulleys cast in one piece affect also those made in sections, though other stresses also come into play. We will, therefore, begin with a discussion of the first case, or of pulleys cast in one piece; and in regard to these we must observe that, were there no force exerted by the arms on the rim, then the only stress to which the rim would be subjected would be what is called the centrifugal tension; *i. e.*, that due to the centrifugal force of the rim, independently of any effect produced by its connection with the arms. This centrifugal tension is the one and only stress commonly taken into account by the designers of pulleys or fly-wheels, whether solid or made in sections.

The stresses actually existing in the rim are, however (in case 1):

1. A direct tensile stress, which is a portion only of the centrifugal tension.

2. Stresses due to the bending of the portion of the rim between two adjacent arms.

Digitized by Google

To explain the matter more fully, we may observe that the amount of the bending stresses depends upon the amount that the arms stretch. If they did not stretch at all, there would be only bending in the rim, and no direct tension. In order to have no bending, it would be necessary that the arms should stretch (in this case due to their own centrifugal force only) enough to allow the rim to assume a circular form larger than its original size by an amount corresponding to the entire centrifugal tension. When the stretch of the arms is less than this, the rim is confined at the points of junction with the arms, and hence arises bending.

Mr. Stanwood assumes that the stretch of the arms is such as to render the stresses due to bending one-half what they would be if the arms did not stretch at all. That this assumption is seldom correct will, I think, be evident before the end of the present paper is reached. A discussion of case 1 is contained in Unwin's *Machine Design*, the first portion of which is correct, while in the last part he makes certain so-called approximations which lead to incorrect results in many practical cases. I will, however, give here what seems to me to be a simpler demonstration of the first portion, and will then continue with a corrected form of the last part. Of course, all this involves a lot of mathematical work, mostly algebra and trigonometry, but the reader who wishes to accept the results without examination can omit all between page 212, line 15, and page 214, line 2 from bottom.

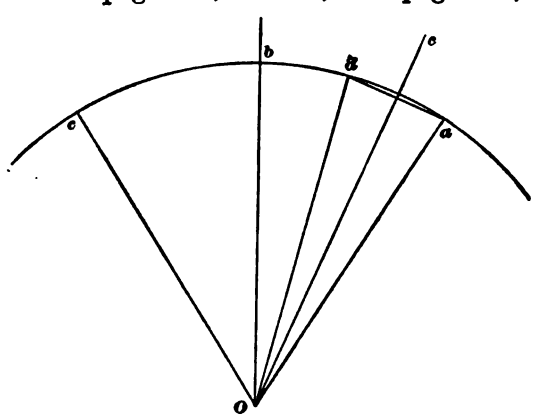

FIG. 61.

I shall adopt, in the main, Unwin's notation, and will begin by defining the letters used.

Digitized by Google

Let *adbc* (Fig. 61) represent the portion of the rim between two consecutive arms *Oa* and *Oc*.

Let

α = angle aOb = angle bOc = one-half the angle between two consecutive arms.

φ = variable angle aOd = twice angle aOe, so that $aOe = eOd$.

$R = Oa$ = distance from centre of hub to centre of rim in feet.

v = linear velocity (in feet) of centre of rim per second.

A = area (in square feet) of cross section of rim.

G = weight of the metal in pounds per cubic foot.

$g = 32.16$ feet per second.

F = pull exerted by each arm on the rim, so that the shearing force in the rim close to the arm $= \frac{F}{2}$.

S = shearing force in rim at variable point d where angle $aOd = \varphi$.

T_1 = direct tension in rim in tangential direction just over the arm.

T = direct tension in rim in tangential direction at variable point d where angle $aOd = \varphi$.

M = bending moment in rim in foot pounds at variable point d, angle $aOd = \varphi$.

M_1 = bending moment in rim in foot pounds at its junction with the arms.

$K = F \div \frac{1}{3}\frac{G}{g}v^2$ for convenience.

r_1 = distance (in feet) from centre of hub to outer end of arm.

r_2 = radius of hub in feet.

I = moment of inertia of cross section of rim about neutral axis, units being pounds and feet.

y_1 = distance from neutral axis of rim to inside.

y_2 = distance from neutral axis of rim to outside.

σ_1 = stress at inside of rim due to bending only (in pounds per square foot).

σ_2 = stress at outside of rim due to bending only (in pounds per square foot).

p_1 = stress (in pounds per square foot) at inside of rim.

p_2 = stress (in pounds per square foot) at outside of rim.

Digitized by Google

E_1 = modulus of elasticity of cast-iron in pounds per square foot.

E = modulus of elasticity of cast-iron in pounds per square inch.

A_1 = area of cross section of arm in square feet, when the arm is of uniform section throughout.

ΔR = elongation of arm due to the action of centrifugal force (in feet).

$S_1 = \frac{F}{2}$ = shearing force just next to the arm.

$S_2 = 0$ = shearing force half way between two consecutive arms.

T_2 = direct tension half way between two consecutive arms.

M_2 = bending moment half way between two consecutive arms.

Consider the forces acting on a portion ad of the rim, where the angle $aod = \varphi$ (variable).

These forces are the following, viz.:

1. The centrifugal force acting on this part of the rim, the resultant of which acts along the line Oe outwards and equals

$$\left(\frac{G}{g} A \frac{v^2}{R}\right) (\text{chord } ad) = 2 \frac{G}{g} A v^2 \sin. \tfrac{1}{2}\varphi.$$

2. The direct tension T_1 acting at a in a direction tangent to the arc ad towards the right.

3. The direct tension T (variable) acting at d, in a direction tangent to the arc ad towards the left.

4. The shearing force $\frac{F}{2}$ acting just to the left of a in the direction aO.

5. The shearing force S (variable) acting at d in the direction dO.

6. The bending moment M_1 at a.

7. The bending moment M (variable) at d.

Resolving forces along the directions Oe and ad, and imposing the conditions of equilibrium, we have:

$$2 \frac{G}{g} A v^2 \sin. \tfrac{1}{2}\varphi - T \sin. \tfrac{1}{2}\varphi - T_1 \sin. \tfrac{1}{2}\varphi - S \cos. \tfrac{1}{2}\varphi - \frac{F}{2} \cos. \tfrac{1}{2}\varphi = 0 \quad (1)$$

Digitized by Google

$$T\cos.\tfrac{1}{2}\varphi - T_1\cos.\tfrac{1}{2}\varphi - S\sin.\tfrac{1}{2}\varphi + \frac{F}{2}\sin.\tfrac{1}{2}\varphi = 0 \quad . \quad . \quad (2)$$

$$M = M_1 - \frac{FR}{2}\sin.\varphi - 2\,T_1R\sin.^2\tfrac{1}{2}\varphi + \left(2\frac{G}{g}Av^2\sin.\tfrac{1}{2}\varphi\right)$$
$$(R\sin.\tfrac{1}{2}\varphi) \quad . \quad . \quad . \quad . \quad . \quad . \quad . \quad . \quad . \quad . \quad . \quad . \quad . \quad (3)$$

In (3) the signs are so chosen that the bending moment is positive when the bending tends to make the rim concave outwards.

When $\varphi = 2\alpha$, either (1) or (3) gives

$$T_1 = \frac{G}{g}Av^2 - \frac{F}{2}\cot.\alpha \quad . \quad . \quad . \quad . \quad . \quad . \quad . \quad (4)$$

Substituting this value of T_1 in (1) and (2), and solving for S and T, we obtain

$$S = -\frac{F}{2}\frac{\sin.(\alpha-\varphi)}{\sin.\alpha} \quad . \quad . \quad . \quad . \quad . \quad . \quad . \quad (5)$$

$$T = \frac{G}{g}Av^2 - \frac{F}{2}\frac{\cos.(\alpha-\varphi)}{\sin.\alpha} \quad . \quad . \quad . \quad . \quad . \quad . \quad (6)$$

and (3) becomes

$$M = M_1 - \frac{FR}{2}\left\{\cot.\alpha - \frac{\cos.(\alpha-\varphi)}{\sin.\alpha}\right\} \quad . \quad . \quad . \quad . \quad (7)$$

To find M_1 observe that when $\varphi = \alpha$, the slope is zero.

Hence $\int_0^\alpha M d\varphi = 0$; hence substituting the value of M from (7) integrating, and solving for M_1, we have

$$M_1 = \frac{FR}{2}\left(\frac{1}{\alpha} - \cot.\alpha\right) \quad . \quad . \quad . \quad . \quad . \quad . \quad . \quad (8)$$

and substituting in (7), we have

$$M = \frac{FR}{2}\left\{\frac{1}{\alpha} - \frac{\cos.(\alpha-\varphi)}{\sin.\alpha}\right\} \quad . \quad . \quad . \quad . \quad . \quad . \quad (9)$$

Equations (5), (6), and (9) give the values of the shearing force.

Digitized by Google

direct tension, and bending moment respectively, at the variable point d, where $aOd = \varphi$.

On the other hand, when $\varphi = 0$ or $\varphi = 2\alpha$, we have

$$S_1 = \frac{F}{2};\ T_1 = \frac{G}{g}Av^2 - \frac{F}{2}\cot.\,\alpha;\ M_1 = \frac{FR}{2}\left(\frac{1}{\alpha} - \cot.\,\alpha\right)$$

Moreover, when $\varphi = \alpha$,

$$S_2 = 0;\ T_2 = \frac{G}{g}Av^2 - \frac{F}{2}\operatorname{cosec}.\,\alpha;\ M_2 = -\frac{FR}{2}\left\{\operatorname{cosec}.\,\alpha - \frac{1}{\alpha}\right\}$$

These equations are all identical with those given by Professor Unwin. They give the shearing force, direct tension, and bending moment, at any point, in terms of F, the force exerted by each arm on the rim. Hence, it is necessary to determine F, so as to substitute its value in the above equations.

To do this in the case of arms, of which the section varies, would lead to great complexity; hence the only case considered here will be that of arms of uniform section throughout; though it seems to me evident that the results will apply with a reasonable degree of accuracy to cases where the variation of section is not great, and where the average section is the same as that of the uniform arm considered. In cases where the variation of section is great, and great accuracy is desired, it will be necessary to make the complex calculation. Let C_1 = centrifugal force of the portion of the arm between the rim and the end of a variable radius ρ, then we shall have

$$C_1 = \frac{G}{g}\frac{v^2}{R^2}A_1\int_{\rho}^{r_1}\rho d\rho = \frac{G}{g}\frac{v^2}{R^2}A_1\frac{r_1^2 - \rho^2}{2} \quad . \quad . \quad . \quad . \quad . \quad (10)$$

and the total stretch of the arm due to the entire force acting on it, is

$$\Delta R = \frac{G}{g}\frac{v^2}{R^2}A_1\int_{r_2}^{r_1}\frac{r_1^2-\rho^2}{2}\frac{d\rho}{A_1E_1} + \int_{r_2}^{r_1}\frac{Fd\rho}{A_1E_1}$$

This reduces to

$$\Delta R = (r_1 - r_2)\left\{\frac{G}{g}\frac{v^2}{R^2}\frac{1}{E_1}(r_1^2 - \tfrac{1}{2}r_1r_2 - \tfrac{1}{2}r_2^2) + \frac{F}{A_1E_1}\right\} \quad . \quad (11)$$

Digitized by Google

Moreover, the total stretch of the portion also of the rim is that due to the tension T, and hence we have

$$2\alpha \Delta R = \int_0^{2\alpha} \frac{TR}{AE_1} d\varphi = \frac{R}{AE_1} \left\{ 2\alpha \frac{G}{g} Av^2 - F \right\}; \text{ hence,}$$

$$\Delta R = \frac{R}{E_1} \left\{ \frac{G}{g} v^2 - \frac{F}{2A\alpha} \right\} \quad \ldots\ldots\ldots \quad (12)$$

Hence by equating (11) and (12); solving for F, and reducing,

$$F = \tfrac{1}{3} \frac{G}{g} v^2 \frac{3 - \left(\frac{r_1 - r_2}{R}\right)^2 \left(\frac{r_1 + \frac{1}{2} r_2}{R}\right)}{\frac{1}{A_1} \frac{r_1 - r_2}{R} + \frac{1}{2A\alpha}} \quad \ldots\ldots \quad (13)$$

or, if we write, for convenience, $F = \left(\tfrac{1}{3} \frac{G}{g} v^2\right) K$, we obtain

$$K = \frac{3 - \left(\frac{r_1 - r_2}{R}\right)^2 \left(\frac{r_1 + \frac{1}{2} r_2}{R}\right)}{\frac{1}{A_1} \frac{r_1 - r_2}{R} + \frac{1}{2A\alpha}} \quad \ldots\ldots \quad (14)$$

Professor Unwin, by assuming that a sufficiently close approximation will be made by considering the arms to extend from the centre of the shaft to the rim, or $r_1 = R$, $r_2 = 0$, obtains

$$K = \frac{2}{\frac{1}{A_1} + \frac{1}{2A\alpha}} \quad \ldots\ldots\ldots \quad (15)$$

which is not a sufficiently close approximation for ordinary cases, as will be shown later. As a summary of the equations deduced we have the following, viz.:

$$\varphi = \varphi, \qquad S = -\frac{F}{2} \frac{\sin.(\alpha - \varphi)}{\sin. \alpha} \quad \ldots\ldots \quad (16)$$

Digitized by Google

$$T = \frac{G}{g} A v^2 - \frac{F}{2} \frac{\cos.(\alpha - \varphi)}{\sin. \alpha} \quad . \quad . \quad . \quad . \quad . \quad . \quad (17)$$

$$M = \frac{FR}{2} \left(\frac{1}{\alpha} - \frac{\cos.(\alpha - \varphi)}{\sin. \alpha} \right) \quad . \quad . \quad . \quad . \quad . \quad . \quad (18)$$

$$\varphi = 0, \qquad S_1 = \frac{F}{2} \quad . \quad . \quad . \quad . \quad . \quad . \quad . \quad . \quad (19)$$

$$T_1 = \frac{G}{g} A v^2 - \frac{F}{2} \cot. \alpha \quad . \quad . \quad . \quad . \quad . \quad . \quad . \quad (20)$$

$$M_1 = \frac{FR}{2} \left(\frac{1}{\alpha} - \cot. \alpha \right) \quad . \quad . \quad . \quad . \quad . \quad . \quad . \quad (21)$$

$$\varphi = \alpha, \qquad S_2 = 0 \quad . \quad . \quad . \quad . \quad . \quad . \quad . \quad . \quad (22)$$

$$T_2 = \frac{G}{g} A v^2 - \frac{F}{2} \operatorname{cosec}. \alpha \quad . \quad . \quad . \quad . \quad . \quad . \quad . \quad (23)$$

$$M_2 = - \frac{FR}{2} \left(\operatorname{cosec}. \alpha - \frac{1}{\alpha} \right) \quad . \quad . \quad . \quad . \quad . \quad . \quad (24)$$

and if we write $F = \left(\frac{1}{3} \frac{G}{g} v^2 \right) K$, we shall obtain

$$\varphi = 0, \qquad p_1 = \frac{T_1}{A} + \frac{M_1 y_1}{I} =$$

$$\frac{G}{g} v^2 \left\{ 1 + \frac{K}{6} \left[\frac{R y_1}{I \alpha} - \left(\frac{1}{A} + \frac{R y_1}{I} \right) \cot. \alpha \right] \right\} \quad . \quad (25)$$

$$\varphi = \alpha, \qquad p_2 = \frac{T_2}{A} - \frac{M_2 y_2}{I} =$$

$$\frac{G}{g} v^2 \left\{ 1 + \frac{K}{6} \left[- \frac{R y_2}{I \alpha} + \left(\frac{R y_2}{I} - \frac{1}{A} \right) \operatorname{cosec}. \alpha \right] \right\} \quad (26)$$

$$K = \frac{3 - \left(\frac{r_1 - r_2}{R} \right)^2 \left(\frac{r_1 + \frac{1}{2} r_2}{R} \right)}{\frac{1}{A_1} \frac{r_1 - r_2}{R} + \frac{1}{2 A \alpha}} \quad . \quad . \quad . \quad . \quad . \quad (27)$$

Digitized by Google

It may be of interest, in any special case, to compute the values of the direct tension per square inch, and of the stress due to bending separately. If this is desired, the following are the formulæ to be used:

$$\frac{T_1}{A} = \frac{G}{g} v^2 \left\{ 1 - \frac{K}{6A} \cot. \alpha \right\}$$

$$\sigma_1 = \frac{M_1 y_1}{I_1} = \frac{G}{g} v^2 \frac{K}{6} \frac{Ry_1}{I} \left(\frac{1}{\alpha} - \cot. \alpha \right)$$

$$\frac{T_2}{A} = \frac{G}{g} v^2 \left\{ 1 - \frac{K}{6A} \operatorname{cosec}. \alpha \right\}$$

$$\sigma_2 = - \frac{M_2 y_2}{I_2} = \frac{G}{g} v^2 \frac{K}{6} \frac{Ry_2}{I} \left(\operatorname{cosec}. \alpha - \frac{1}{\alpha} \right)$$

The method given above will now be applied to the case of a 48-inch pulley with the rim section shown in Fig. 62, the out-

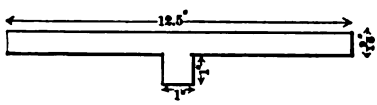

FIG. 62.

side diameter of which is 48 inches, and the section of each of its six arms an ellipse, $2\frac{1}{4}'' \times 1\frac{1}{2}''$.

We then have

$$A = \frac{8.031}{144} \text{ sq. ft.} \qquad A_1 = \frac{3.240}{144} \text{ sq. ft.}$$

$$y_1 = \frac{1.185}{12} \text{ ft.} \qquad y_2 = \frac{0.378}{12} \text{ ft.}$$

$$I = \frac{0.807}{(12)^4}, \text{ units being feet.}$$

Suppose we have

$$r_1 = 1.870', \qquad r_2 = 0.313'.$$

Also let us assume

$$R = \frac{24'' - 3\frac{9}{32}''}{12} \text{ ft.} = 1.977',$$

Digitized by Google

and let $v = 88$ feet per second (*i. e.*, one mile per minute). Using these data we obtain from equation (14)

$$\frac{K}{A} = 0.813\,;$$ whereas equation (15) would give

$$\frac{K}{A} = 0.582.$$

Using the former, which is, of course, the most correct, we obtain

$$\frac{T_1}{A} = 575 \text{ lbs. per square inch.}$$
$$\sigma_1 = 5{,}060 \text{ " " "}$$
$$p_1 = 5{,}635 \text{ " " "}$$

whereas, the second, or Unwin's value of $\frac{K}{A}$, would give

$$\frac{T_1}{A} = 625 \text{ lbs. per square inch.}$$
$$\sigma_1 = 3{,}621 \text{ " " "}$$
$$p_1 = 4{,}246 \text{ " " "}$$

Hence, it is plain that Professor Unwin's formula for the value of $\frac{K}{A}$ is too inexact to use. If now we compute these quantities by Mr. Stanwood's method; *i. e.*, by taking for T_2 the entire centrifugal tension, and for σ_2 one-half the outside fibre stress that would arise in the portion of the rim between two consecutive arms, if this were in the condition of a beam fixed in direction at the ends and uniformly loaded, we should find

$$\frac{T_1}{A} = 752 \text{ lbs. per square inch.}$$
$$\sigma_1 = 9{,}608 \text{ " " "}$$
$$p_1 = 10{,}360 \text{ " " "}$$

Hence, it is plain that Mr. Stanwood's assumption is very far from being applicable to this (an ordinary) case, this assumption being that the stretch of the arms is one-half that corresponding to the stretch that would arise in the rim from the centrifugal tension only.

Digitized by Google

Moreover, if we compute the value of ΔR in this case, using, of course, the first value of $\frac{K}{A}$, viz., 0.813, and assuming for modulus of elasticity of cast-iron $E = 17{,}000{,}000$ lbs. per square inch, we obtain

$$\Delta R = 0.00078''.$$

But the stretch of the rim due to centrifugal tension only would be

$$0.00659'',$$

and the corresponding stretch of the arm would be

$$\frac{0.00659}{2\pi} = 0.00105''.$$

Hence, the stretch of the arm is, in this case,

$$\frac{0.00078}{0.00105} = 0.74$$

of the stretch that would correspond to the stretch the rim would have in consequence of centrifugal tension only, and not one-half, as Mr. Stanwood assumes. I will add that 5,635 pounds per square inch seems to me to be too high a fibre stress for cast-iron, and hence, that if it were to be run so fast that v would be equal to 88 feet per second, it ought to be made stronger. On the other hand, it would be amply strong if it were run at such a speed that $v = 62$ feet per second, for then we should find

$$p = \left(\frac{62}{88}\right)^2 (5635) = 2797 \text{ lbs. per square inch.}$$

The above completes what I have to say in the case of solid pulleys; and we come now to the more important matter of the

STRESSES IN THE RIM-JOINTS OF FLY-BAND WHEELS.

In my discussion of Mr. Stanwood's first paper (see A. S. M. E. *Trans.*, Vol. XIV., page 261, *et seq.*) what I said upon the subject was, of course, incomplete in that the bending moment due to the centrifugal force was not taken into consideration.

In his second paper Mr. Stanwood undertakes to supply this

Digitized by Google

omission, and to develop formulæ which, as he claims, are more nearly exact.

The chief criticism which I have to make upon his last paper is that, in taking the bending of the rim into consideration, he makes use of an assumption in regard to the stretching of the arms similar to that employed in his first paper; and this error affects a great part of the formulæ which he gives in his second paper.

Inasmuch, however, as it will doubtless be of more interest to members of the Society to have a connected discussion of the matter, than to follow out the differences between Mr. Stanwood and myself, I will begin *ab initio*, and proceed to discuss anew the case of the bolted fly-wheel, modifying in part, and repeating in part what I said in the discussion of Mr. Stanwood's first paper.

What I have to say refers to large fly-wheels made in sections, the sections being bolted together. Sometimes this bolting is done half way between two consecutive arms, and sometimes over the arms. In the latter case, however, the amount by which the rim of the wheel projects beyond the arms in a direction parallel to the shaft is often so great that the outer portion receives little or no reënforcement from the connection of the rim with the arm.

In both cases the joint is almost invariably the weakest part of the structure, and, indeed, if the stresses in the different parts of the joints of a number of existing fly-wheels be determined, it will be found in many cases that the real factor of safety used in their design is decidedly small.

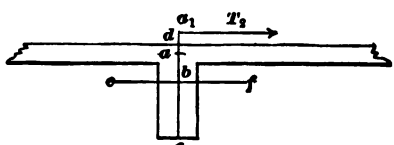

FIG. 63.

Proceeding now to our discussion, take first the case when the joint is half way between two consecutive arms, and use the same notation that was employed in the earlier part of this paper. We should first make the following calculation, which disregards whatever effect there may be due to the overhang of the rim beyond the arm in a direction parallel to the shaft.

In Fig. 63 let ad = distance of centre of gravity of the rim

Digitized by Google

section from the outside of the rim; let *ebf* be the line of the axis of the bolt or bolts, and *c* the lowest point where the flanges come in contact.

The stresses in the bolts, rim, and flanges are different according as one or the other of the two following conditions holds, or a condition intermediate between the two, the extremes occurring when

1. The bolts are set up very tightly, and when the rim and flanges are very stiff.

2. The bolts are so loose that the two parts of the joint do not touch each other.

Beginning with the first case (see Fig. 63), we have for the forces acting at the joint, the tension T_2 (applied at a point so near a that it will be practically near enough to consider it at a) together with the bending moment M_2, but this combination is equivalent to a single force T_2 applied at a_1, where $aa_1 = \frac{M_2}{T_2}$ and is laid off outwards from a.

Now, inasmuch as the fastenings are not in line with the single resultant force, T_2 acting at a_1, a bending moment arises in the *joint* which in this case is taken up by the bolts and flanges and not by the rim; and we consequently have, if S is the total stress in the bolts, that

$$S = T_2 \frac{a_1 c}{bc}$$

Besides this the greatest fibre stress in the flanges should be determined from the bending moment they have to bear, but this is so simple a proceeding that I shall not stop to deduce a formula.

Taking up now the second case, when the bolts are so loose that the two parts of the joint do not touch each other, we find that the entire discussion of the stresses that act in a solid pulley no longer finds any application here, for there can be no bending moment M_2 at the joint.

Hence, in this case, the resultant force acting at the joint is F_0 (the centrifugal tension) applied so near a that we can consider it at a.

Then since the bolts are loose the total stress in the bolts is only F_0, but the bending moment $F_0 (ab)$ is taken up by the rim.

In the actual case the stresses may be either of those de-

Digitized by Google

scribed above, or anywhere intermediate between them, and are liable to vary in their distribution according to the speed and the consequent amount of yielding of the different parts.

After having made the calculations described above which, as I said, disregards the effect of the overhang of the rim beyond the arms, we should, when the overhang is at all considerable, carry out a similar set of calculations substituting F_o (the centrifugal tension) for T_2 and the point of application a for a_1, thus determining what would be the stresses near the edge of the rim if the overhang is so much that this is not reënforced by its connection with the arms.

Then if (as would probably be true in most cases where the joint is between two consecutive arms) the stresses determined by the former set of calculations are greater than those determined by the latter, we should design the wheel so that it will resist the former stresses with safety; but if, as might happen, the stresses, or some of them, came out greater in the latter set of calculations, the wheel should be designed so as to bear with safety the greatest to whichever set they belong.

We will now proceed to consider the case where the rim joints are directly over the arms, which is the most usual case in large, built-up fly-band wheels.

If we were to make our calculations by disregarding the effect of the overhang of the rim beyond the arms in a direction parallel to the shaft, *i. e.*, to determine the stresses that would arise if the overhang were very small, we should find that the tension T_1 at a, together with the bending moment M_1, would be equivalent to a single resultant tension T_1 at a point a_1, which would now be below instead of above a, and where $aa_1 = \frac{M_1}{T_1}$; *i. e.*, the resultant tension would be T_1, and its point of application, a_1, would be below a.

As long as this point a_1 remained above b, the mode of calculation outlined in the other case, page 14, line 12, to page 14, line 27, would apply, while if the point a_1 were to go below b (not a usual case) the tendency to pivot would be around d instead of around c.

The above would be the case in wheels with a very small overhang, and also would apply to the portion of the rim directly over the arms in those with a considerable overhang, except that the various modes of fastening the rim to the arm

Digitized by Google

would come in to modify the calculations; and it would be useless for me to attempt any detailed discussion of these various modes of attaching the rim to the arm, as they all differ in detail; and the calculations for determining the stresses in one arrangement would not be suitable for another arrangement.

Next consider the case of the outer edge of the overhang. Unless the flanges or lugs are so stiff that their deflection is so slight as not to allow the outer edge of the rim to increase in diameter to the extent necessary to correspond to the action of the centrifugal tension (with the effect of the arms absent), the outer edge of the rim will be in the same condition that it would be if there were no arms; and the mode of calculation to be followed will be explained even at the risk of seeming repetition, because this is one of the most frequently occurring cases.

The total hoop tension in the rim will be F_o (the centrifugal tension), applied at a point so near a (see Fig. 63) that it may practically be considered as applied at a.

Now, inasmuch as the fastenings are not in line with the force F_o, a bending moment arises, and two cases are conceivable:

First, that the bending is taken up by the fastenings, *i. e.*, the bolts and flanges, and not by the rim.

Second, that the bending is taken up by the rim and not by the bolts.

In the first case which would occur when the bolts are set up tightly, we should have

$$S = F_o\left(\frac{ac}{bc}\right).$$

In this case there is a bending moment in the flange at b equal to $F_o\,(ab)$, but there is no bending moment in the rim.

In the second case, which would occur if the two parts of the rim did not touch each other, the stress in the bolts is only F_o, but the bending moment $F_o\,(ab)$ is taken up by the rim.

The pulley should be so designed that the bolts and flanges are strong enough to resist the stress if it occurs, as described in the first case, and that the rim and flanges are strong enough to resist the stresses if they occur as described in the second case.

In order to strengthen the rim and flanges at the joint, there should be a sufficient number of ribs cast on the inside of the rim; but however the wheel is designed, all the stresses in the

Digitized by Google

bolts, and the fibre stresses due to bending in the rim and flanges at the joint, should be figured, and the wheel so proportioned that they will be kept within safe limits.

If the flanges were so very stiff that they would not allow the outer edge of the rim to expand to a circle of the size corresponding to the action of the centrifugal tension alone, then the stresses at the edge of the rim would be less. But I think a perusal of the numerical example figured out in the case of a solid pulley will convince any one that such a condition of things is exceedingly improbable, and hence that Mr. Stanwood is right in saying in his last paper that

"In practice the joint should not be made of less strength than

$$\text{“}S_1\, bc = F_o\, ac = \frac{V^2}{10}\, Aac.\text{”}$$

This paper is, of course, only intended to deal with the stresses due to the action of centrifugal force; but I will say a very few words about other causes of stress.

The pull of the band must cause very considerable stresses in the different parts of the rim and arms, and these stresses will constantly vary; but I shall make no attempt to deduce them here, but will say that some experiments were made at the Massachusetts Institute of Technology, and are recorded in the A. S. M. E. Proceedings, Vol. X., p. 187, upon the strength of pulley arms, and it is plain from those experiments that the bending moment brought about on the arms, in consequence of the pull of the belt when transmitting power, is far from being equally divided among the arms (as is often assumed in books), as one arm always broke first, *i. e.*, the arm situated in one special position, and then the rim broke.

DISCUSSION.

Mr. Wm. Kent.—I regard this discussion of the question of strains in rims and fly-wheels as one of the most important ones before the engineering world to-day, on account of the frequency in recent times of the breaking of band wheels. The discussion heretofore has taken a mathematical form entirely, and I want to suggest to those who are studying it the possibility of its taking an experimental form.

Digitized by Google

Fig. 64 is a band-wheel, and *A* and *B* are two of the arms. The line *C D* represents the inner edge of the rim, which is a true circle when the wheel is at rest. We want to know what form it takes when the wheel is running at different speeds. According to Mr. Stanwood's idea it takes a form like the dotted line, the rim near the arms expanding a trifle, but the middle expanding very much more. If we could know from experiments what form that does take under different speeds, we might then have more

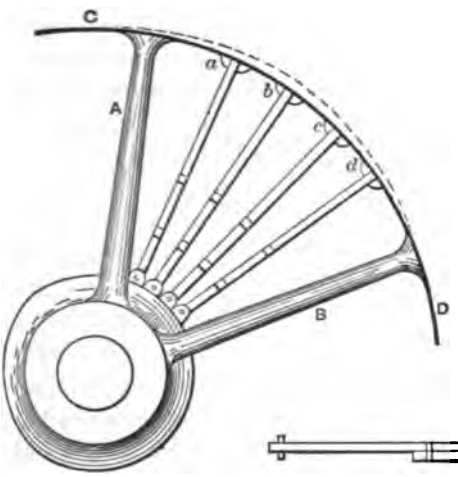

FIG. 64.

FIG. 65.

of a basis on which to make calculations than we now have. There are, no doubt, different ways of making such experiments, by electricity and photography, for instance. But in the last few moments I have thought of a mechanical way. Suppose we attach little projections to the inside of the rim, as shown in the sketch at *a, b, c, d*, and little projections opposite to them on the hub, and put between these projections several radial bars of wood, or any other substance. Each of these bars is composed of two bars, one sliding on the other (as in Fig. 65). The bars have little straps around them to hold them together, but allow of their sliding. At *E* is a steel pin, pressed down by a strong steel spring. As the wheel expands, one of these bars will slide on the other, and this pin will make a little scratch on a plate in the lower bar, the length of which can be measured with a microscope, if necessary. If we speed this wheel up to so many turns per minute and measure the length of the scratches, then speed it up to other turns and measure the

Digitized by Google

scratches each time, and, finally, put a bomb-proof around it and burst it, we can get all the data necessary to determine the form of the wheel at different speeds.

Prof. D. S. Jacobus.—The results given by Professor Lanza are the same as those given by Professor Unwin, if the length of the spokes of the fly-wheel are assumed to be equal to the radius of the wheel. Professor Lanza has eliminated one approximation made by Professor Unwin, but he has ignored another, which may tend to counterbalance the one he has removed. Again, Professor Lanza assumes a parallel spoke, which is far from the truth in large wheels, where an exact analysis is the most desired. It is probable that in many cases the approximation involved in estimating the equivalent parallel spoke will be greater than the approximation involved in assuming the length of the spoke to equal the radius of the wheel. The approximation which Professor Lanza has ignored may be found in the equation preceding Equation 12. In obtaining the extension of the arm at this point in the analysis, it is virtually assumed that the rim of the wheel remains circular, whereas, in an exact solution, the true equation of the curve of flexure of the portion of the rim between two spokes should be used. If Professor Lanza wishes to demonstrate that his analysis is more exact than Professor Unwin's, he should remove this as well as all other approximations before making a comparison, for one approximation may tend to balance the other. Another element which is not included in either Professor Unwin's or Professor Lanza's analysis is the effect of a sudden variation of load, which appears to produce an important action, as many fly-wheel accidents have occurred when the load was irregular, or when there was a sudden accidental change in the load. Until it can be shown that the introduction of all these elements will not affect the final results, it cannot be said that Professor Lanza's change in Unwin's analysis has improved the latter.

*Prof. Gaetano Lanza.**—Mr. Kent is perfectly right in urging the importance of making experimental investigations of the change of form and dimensions of the rim and arms of fly-wheels at different speeds; and, as I intend to attempt some such experiments, I have given more or less thought to the manner of carrying them out.

That the work will involve the measurement of very small

* Author's closure, under the Rules.

Digitized by Google

quantities is evident, and that apparatus of very great delicacy will be necessary. Hence, it is not possible to assert that any one method proposed will be a success, until an actual trial has developed the difficulties involved in its use.

The remarks of Professor Jacobus about parallel *versus* tapering arms are, it seems to me, answered by the clause in the paper beginning on page 214, at the middle of line 18, and ending at the middle of line 20, inasmuch as it is not the object of the paper to furnish formulæ adapted to all cases, but to explain how the calculations should be made.

That the effect of a sudden variation of load should be considered in the design of a fly-wheel, will be found to have been already stated on page 209, lines 7 and 8, of the paper, while on page 209, line 11, it is also stated that the paper itself is only intended to study in detail the stresses due to centrifugal force.

The only remaining criticism to be found in the remarks of Professor Jacobus is contained in the following clause of his discussion, viz.: "In obtaining the extension of the arm at this point in the analysis it is virtually assumed that the rim of the wheel remains circular, whereas, in an exact solution, the true equation of the curve of flexure of the portion of the rim between two spokes should be used." In regard to this I will say that it seems to me that any one who will seriously make the attempt to examine in detail what are the modifications which will be required in my equations, in order to make the analysis include this refinement, will soon satisfy himself that the percentage of error due to neglecting it will be very small indeed; and not at all comparable with the error which I have eliminated, and which, in the case of the pulley computed, was about twenty-five per cent.; indeed, it seems to me that it would hardly be possible, in the case of any reasonably well-proportioned pulley, for it to reach as high a value as three per cent.

In closing, it may be well to add that an examination of a number of fly-wheels has shown me that one of the places where the builders have been especially liable to leave structural weakness is in the outer portions of the rim joints, in cases where the rim joints are directly over the arms, and where there is a considerable overhang; whereas, this source of weakness could have been easily detected by the method shown on page 223, beginning at line 6.

Digitized by Google

DCXXII.*

NOTES ON STEEL FORGINGS.

BY G. M. SINCLAIR, PHILADELPHIA, PA.
(Member of the Society.)

THE closing decades of the nineteenth century have seen wrought-iron practically driven out of our markets and supplanted by steel. So rapid has been this change, that many users and even producers have not thoroughly grasped the distinguishing characteristics of the latter metal and their influence, and the extension of the use of steel, rapid as it has been, has been somewhat retarded by costly errors due to this cause.

We purpose to note some of the general principles controlling the manufacture and use of steel forgings. A forging may be good or bad, independent of its material. We shall avoid metallurgical questions, and take only what may be called the mechanical view of the subject. This will exclude questions of composition and many other interesting and important subjects. By "steel," the ordinary carbon steel is referred to, although the statements made apply with equal force to many or all of the numerous other varieties.

The first point to be considered is the design of the forging. Iron forgings are essentially built up. It follows that great irregularities of shape are of small moment, so far as the manufacture is concerned. A steel forging, on the other hand, is made from an ingot, which at the outset must be sufficiently large in section to make the largest part of the desired forging out of it. It cannot be enlarged in section except in minor cases, when it may be upset or have a piece welded on. But it is highly objectionable to weld in steel, especially where any strain is put on the weld. With some grades of steel, welds are

* Presented at the New York meeting (December, 1894) of the American Society of Mechanical Engineers, and forming part of Volume XVI. of the *Transactions*.

Digitized by Google

altogether out of the question, and even with soft steels they are undesirable. Cases may be met with, however, in which it is desired to fill out a forging at a point where no stress of importance will come, as, for instance, to form a boss to carry an oil-cup, when a piece of iron or soft steel may be "jumped" on in preference to making a set-down. As a rule, however, avoid all welds. The designer must remember the conditions, which are mainly these: An ingot of practically uniform section to start with, and a material which demands as few heats as possible and does not permit of welds. It follows that he must make his design as simple and uniform as possible, avoiding large collars, arms, sharp set-downs, and other irregularities of form. In return he will get a forging which has been finished in a few heats, at low cost, accurate to size, and giving the machine shop a minimum of work.

The design completed and furnished to the forge-master, the billet or ingot is selected, and goes into the heating furnace. What is the condition of an ingot? After being cast it has cooled rapidly from the outside. Since the heat of the interior has passed off through the outer portions of the mass, the interior has necessarily been at a higher temperature than the surface during the entire cooling process, and the more rapid the cooling the greater the difference of temperature between the exterior and interior. The surface has finally set rigidly while the interior was plastic or even fluid. While the interior is still fluid the shrinkage at the lower portion of the ingot is fed from above. Frequently this is at the expense of a hole, or "pipe," at the upper end; but even if the ingot when cooled is solid throughout, the metal is under stress. It is as if a quantity of steel were put into a rigid shell too big for it, and were stretched out in all directions to fill it. Now suppose this rigid shell is expanded by heat so quickly that the heat is not transmitted in any appreciable amount to the interior. It follows that this interior portion must immediately stretch more in every direction, or it will not fill the interior of the shell. So the interior of an ingot is under stress when put into a heating furnace, and these stresses are increased as its exterior is expanded. If the heating is not done slowly, so that before much additional stress is induced the interior has acquired heat and begun to expand, and the whole ingot is thus gradually brought to a plastic condition, there may be internal cracks in the ingot when it goes to

Digitized by Google

the forge. This danger is not great with small ingots, but large ingots will sometimes crack with a noise like a bell while still almost cold.

To heat slowly, and at the same time economically, requires careful consideration in designing the furnace. Some furnaces under favorable conditions will heat ten pounds or even more for one pound of fuel. There are other furnaces in use which do not do better than pound per pound. If very large pieces are to be heated, requiring high temperatures for a long time, the regenerative form of furnace will effect great economy of fuel. If, on the other hand, a great number of small pieces are handled, the furnace might be made long, and the work passed gradually from the cool end to the hot end. This is a form of continuous furnace with many advantages, but with any furnace, a mild, reducing flame must be kept to avoid "burns" and scaling. The ideal way of heating is to reverse the operation of cooling, that is, heat from the inside outwards. With present appliances this is not possible, except with bored ingots, which are used only for hollow forgings. Perhaps our electrical friends will perfect a system by which, for example, we shall wrap an ingot in asbestos, run two poles up against the ends, turn a switch, and find our ingot heating rapidly, safely, and with almost no loss from scaling. In such a system, the expense of a furnace would be offset by that of boilers, engines, and dynamos; but it would be rash to say that this may not be the method of the future, even for large work. This operation of heating is the first one which the forge undertakes, and is one where, in the majority of cases, a considerable saving could be effected. The requisites for that object are primarily a well designed and constructed furnace, and, secondarily, intelligence in using it. No fixed rules can be given to fit all cases, but each must be carefully studied.

In the manufacture of a forging, the forging process itself furnishes the most obvious field for introducing economies and safeguards, and has, therefore, probably received most attention. To change the form of a mass, there must be a flowing of particles over one another against a certain amount of resistance. Time is an essential factor of this flowing. In making a forging, therefore, we have a force acting through space during time, and all three factors, the force, the space, and the time, are variable. Bearing in mind these general considerations, a few words on the

Digitized by Google

relative merits of the steam hammer and the hydraulic forging press will not be out of place. The action of the hammer differs from that of the press mainly in the time effect of the blow. Suppose a similar blow from the two machines, that is, the same area and mass of metal deformed to the same extent. Then, in the case of the hammer, the energy of the falling mass is absorbed by the metal in a very short time, in which the velocity is reduced from the maximum to nothing. For our comparison, take that type of press in which the pumps deliver direct to the cylinder. There we have the falling weight of the hammer paralleled by a revolving fly-wheel; and the steam in the cylinders of the engines acting during the blow would correspond to top steam in the hammer. The "work" in the press, however, would not absorb the entire energy of the fly-wheel, for, of course, the water will be shut off before the engines are stopped. The duration of the blow is greatly lengthened, and the velocity of the die is much less than that of the fly-wheel; but, as in the hammer, there is a retardation from the time the die touches the metal until the deformation is completed. The nearer the blow to the capacity of the press, the greater the retardation; and the farther from that limit, the more nearly uniform the velocity of the blow. In fact, the hammer becomes a press when the tup is so heavy that it does its work without any fall; and the press would be a hammer in effect if the stored energy of the fly-wheel were transmitted so directly as to be absorbed in the same time as the energy of the falling tup of the hammer. While such construction is impracticable, the illustration shows that within limits the two systems do approach each other in every-day, practical work. To sum up, it may be said the press differs from the hammer in that, by the intermediary of water and the enlargement of the water passage at the cylinder of the press, we retard the blow and extend its effect over a much greater time.

This being the difference of action of the two systems, which will give a better product? Theoretically, under the press, the particles having ample time to flow, the treatment is not so severe. Practically, however, under a hammer properly proportioned to the work, the particles have then likewise "ample time" to flow. In other words, the press takes a needlessly long time to effect the deformation. Of course we refer only to steel. Other materials may require all the time, or even more,

Digitized by Google

for deformation, which they would have under the press as now constructed. But for steel, the product of the hammer is equal, if not superior, in quality to that of the press. There is, however, a chance for bad practice in the use of hammers which does not exist with presses. A light hammer driven at a high velocity expends its energy on the surface of the forging. The interior not only is not compacted and worked, but it is actually opened up and even ruptured. Hammered forgings may be so made, and may in use have, or soon develop, bad internal cracks. With the press this is impossible, and this fact is, to a certain extent, a guarantee of quality to the user of hydraulic pressed forgings.

It is the distinction in the operation of light and heavy hammers, above noted, which has given rise to the prejudice often found against top steam. This prejudice has little foundation, and it would be a mistake to build a hammer for general forging purposes without top steam. It is the unfortunate property of all steam hammers that the larger the forging, and therefore the greater the power required, the less power is there available, since the large size of the forging reduces the stroke of the hammer. Top steam enables the hammer in effect to lengthen its stroke. That is, it will give the tup at part stroke the same velocity that it would acquire by gravity at full stroke. This gives the hammer vastly greater range without necessarily trespassing on the forbidden ground of high velocities. Further, it increases the product, for a greater number of blows can be given in the same time than with a hammer actuated only by gravity. The use of top steam is legitimate; its abuse must be guarded against.

The advantages of the press over the hammer rest chiefly on merits appealing to the manufacturer of forgings. Except for some varieties of plain work, the best designed presses are quicker than hammers, their running expenses are less, and, above all, owing to the absence of shock, they are much more *mechanical* tools, forgings being turned out from them with precision and ease which could not possibly be made at a hammer. These advantages can scarcely be overestimated. Perhaps the severest criticism brought against the press is the comparatively high heat at which forgings are finished. As all forgings are or should be annealed before being put into use, this criticism has little force.

Digitized by Google

Whether the forging is made by a press or by a hammer, the virtues or faults of the design must be considered by the hammer man. Before beginning work he must plan it. All reheating, and specially reheating of finished parts, must be avoided. It is time well spent to think out every operation beforehand, to have dimensions calculated, and templets prepared for various critical points of the manufacture, and, in short, so to prepare that almost any contingency which may arise has been foreseen. When a piece is heated and brought to the hammer or press, there is no time for deliberations and consultations. If they become necessary, it is at the expense of the economy and quality of the work.

The forging being made, it remains to "treat" it. The usual treatment is annealing or oil-tempering and annealing. Exactly what takes place in a piece of steel submitted to these processes is not certainly known, but the physical results are pretty well understood. In most cases the treatment will consist only of annealing. Formerly the annealing process was a very perfunctory operation, and frequently was omitted altogether. To-day it is generally and rightly regarded as important. All steel comes from the hammer or press with internal stresses more or less severe. The particles are in a disturbed condition, and cannot adjust themselves while the metal is cold; at least, not in a reasonable time. Annealing relieves these stresses. It will also break up crystallization more or less effectively. The effect of annealing is shown by the testing-machine by a reduction in tensile strength and increase in extension. To anneal properly, furnaces for the purpose should be used. The old method of burying in lime or ashes, though beneficial, is uncertain and incapable of accurate results. The design of the annealing furnace, like the heating furnace, is capable of much variation, and for best results must be made to suit the peculiarities of each case. The fuel may be wood, coal, gas, or oil. The essential characteristics are, that it shall enable the work being treated to be brought up to any desired temperature slowly and uniformly, and again cooled in the same manner. With these two points provided for, all other devices and arrangements of furnace for facilitating work and for economy may be introduced. For high-class work, the temperatures of the furnace, composition of the metal, and physical tests must be noted. In fact, no one at this time can hope to compete for high-grade work without

Digitized by Google

the free use of the chemical laboratory and testing-machine, and making and preserving more or less elaborate records.

There is a great variety of other processes by which forgings may be treated, such as case-hardening, Harveyizing, hardening in water, oil-tempering, etc.; but the last mentioned is of more general applicability than any of the others, and we shall close by a reference to it. Its most obvious effect on steels having a moderate percentage of carbon seems to be of a physical character analogous to forging. The sudden contraction due to the chilling of the surface compacts the metal and breaks up crystallization. At the same time the suddenness of the cooling in itself has a tendency to check or prevent the formation of crystals. It is evident from the above, and also from experience, that the thicker the metal the less will be the effect of the oil-tempering, and at no very great thickness the metal in the interior will be little affected. It is also evident that for very irregular shapes the process is not applicable. For cylindrical pieces, and especially for hollow cylinders, it is a most beneficial operation. A coarse crystalline structure is readily changed to a fine homogeneous quality. The most marked effect of oil-tempering and annealing on steel is the raising of the elastic limit. This is accompanied by a moderate gain in tensile strength and a slight loss in ductility; but both these results are secondary in importance and amount to the effect on the elastic limit. "Gain" and "loss" above are taken with reference to the same steel thoroughly annealed, but not oil-tempered, and also it is to be noted that oil-tempering should, except in particular cases, be followed by annealing.

The application of this treatment is now universally adopted for gun forgings, and has extended from that to large shafting and similar work, and is now also used for armor plate. The details of tempering, whether double or single, at what temperature, etc., depend on circumstances. In general, the plant necessary consists of a furnace for heating capable of giving the forging a high uniform temperature, a tank of oil, and proper hoisting and conveying machinery to pass the work quickly from the furnace to the tank. It is to be noted that the heating in this case is of an intermittent character, and the furnace will be designed with that in view. Oil-tempering opens the way for a bad practice which is not always avoided as it should be, and, in fact, is not always recognized as such. We refer to the selec-

Digitized by Google

tion of a very soft steel for the forging, and tempering up to fill specifications. This is sometimes carried to such an extent that the final annealing is so slight as to be a farce. While oil-tempering benefits the metal, it leaves it with considerable internal stress which should be relieved by an effective annealing. At the outset, therefore, a sufficiently high grade of steel should be selected to permit of thorough final annealing.

DISCUSSION.

Mr. Wm. Kent.—I would be glad if Mr. Sinclair would add a few more details, such as: When you are going to oil-temper a forging, First, what carbon should that forging have? Second, what will be the tensile strength and elongation (1) of the original steel in the ingot, (2) when it is forged, (3) when it is oil-tempered, and finally, when it is annealed?—so as to show the gradations that the steel goes through. Also, he speaks of hammer bars and other things to resist shock. I would like to know what carbon and what treatment he would recommend for a piece of steel designed to resist shock to the utmost degree.

*Mr. Geo. M. Sinclair.**—The gentleman outlines sufficient work for a number of papers. We started out with the statement that we should avoid questions of composition. In general, therefore, we may say, in regard to the first question, that, under proper conditions, all grades of steel used in forgings may be oil-tempered, but whether it is desirable in any particular case or not must be determined by the engineer. In regard to the second question, it should be noted that not only differences in composition but also differences in the method and operations of manufacture affect the results obtained by physical test; so that even if made from steel from the same ingot, two untreated forgings may differ greatly, and by treatment they may be brought to the same condition, or to different conditions, as may be desired. The extension of the application of oil-tempering to pieces of more complicated shape, as instanced in the forked connecting-rods for the engines of the torpedo boats for the United States Navy, for which bids have recently been asked, and to pieces designed to sustain shock, is interesting. In regard to the latter we shall only add that shocks vary in character and should be treated accordingly. It

* Author's closure, under the Rules.

Digitized by Google

is a fact that a hammer bar of about 0.40 per cent. carbon and oil-tempered gave much better results than one of about the same carbon, not oil-tempered; but it does not follow that a more suitable steel could not be used. These questions may perhaps form the basis of further papers, when more time can be given to their consideration than is now available.

Digitized by Google

DCXXIII.*

STRENGTH OF RAILWAY CAR AXLES.

BY L. S. RANDOLPH, BLACKSBURG, VA.
(Member of the Society.)

THE writer, a few years ago, made some calculations of the strains upon the axles of freight cars, which seemed to be of sufficient interest to be presented to the Society.

The static load on the journal of a loaded 60,000 pounds' capacity freight car is as follows:

Load	60,000	pounds.
Weight of car	27,000	"
	87,000	"
Deduct 8 wheels and 4 axles	6,800	"
	8) 80,200	"
Load on each journal	10,000	"

This is constant, and may be taken as the minimum static load on the journal.

This load, while acting constantly, would be of the nature of an intermittent or repeated load, the load being applied first in one direction, as regards any one set of extreme fibres, and then in the other.

The experiments of Wöhler and Spangenburg give for the ultimate strength, under these conditions, for wrought iron, 17,600 pounds, Krupp's axle steel, 30,800.

Taking the safe number of vibration at 30,000,000, we find that a 33-inch wheel under a freight car, with an average of thirty miles per day, would make about 6,720,000 revolutions, or would

*Presented at the New York meeting (December, 1894) of the American Society of Mechanical Engineers, and forming part of Volume XVI. of the *Transactions*.

Digitized by Google

be worn out in about five years, if the metal was strained to the limits given.

The springs used by a number of our railroads are so arranged that the deflection under the static load is about half the total deflection. The writer has observed a number of these springs which have been forced solid. This would give a load, when the spring was thus forced down until the coils touched, of 20,000 pounds. What the load would become when the oscillations were more than enough to force the spring solid, it would be impossible to say.

The writer's observations have shown that the springs are constantly deflected to a point midway between the loaded and solid height, giving a load of 15,000 pounds on the journal.

The centrifugal force of a freight car on a six-degree curve, at twenty miles per hour, would give about 300 pounds for the pressure on the flange.

Scheffler gives as the results of his experiments, that the oscillations may give a horizontal component of forty per cent. of the static load; this would give about the same figure as above, namely, 15,000, and would be much greater than that due to the centrifugal force.

We would have then the loads on the journal as follows:

Static load	10,000
Load repeatedly occurring	15,000
Load with springs solid	20,000

The movements of these applied loads would follow the lines shown on the diagram. (Fig. 66.)

Using the formula for the moment of resistance of a circular section $\frac{1}{32} \pi d^3 T$, we would get the lines shown in the diagram for values of T of 18,000 and 30,000 pounds per square inch. Line A gives the moment of resistance for stress of 18,000 pounds per square inch. Line B gives the moment of resistance for stress of 30,000 pounds per square inch. Line C gives the moment of resistance for stress of 30,000 pounds per square inch when the journal is worn down to the limit of three and one-half inches; and line D gives the moment of resistance for stress of 18,000 pounds per square inch under the same conditions.

E, F, and G, = the moment of the applied forces for loads of

Digitized by Google

20,000 pounds, 15,000 pounds, and 10,000 pounds respectively on the journal.

The calculations of a large number of broken axles have indicated, though not definitely proved, that, when the moment of resistance approached the moment of the applied forces, breakages became very frequent.

The fractures in a large number of axle breakages examined by the writer have been where the wheel-seat joins the tapered

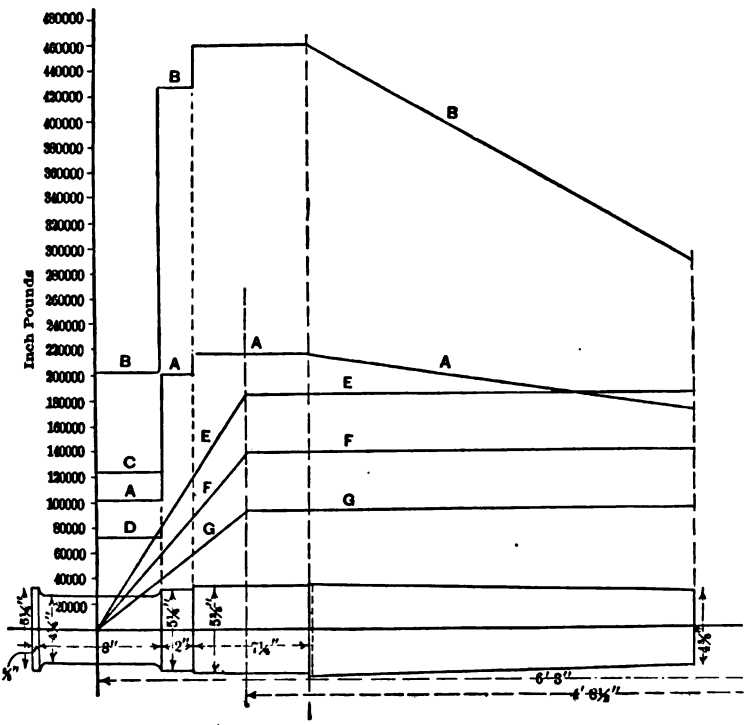

FIG. 66.

portion of the axle, and were undoubtedly due to the scoring of the axle at that point by the tool.

The others were about evenly divided between the centre of the axles and the junction of the journal with the axle, indicating weakness at these points.

It will be noticed that the lines of the moments of applied forces approach more nearly to the lines of the moments of resistance at these points.

Digitized by Google

The only cases of breakage in the tapered portion between the wheel-seat and the centre of the axle which have been observed by the writer, have invariably been due to flaws in the material, and they have been very few in number.

It will be noticed that the lines of the moments of applied forces are horizontal between wheel-seats. This would indicate that the axle should be made the same diameter in the centre as at the wheel-seat. The observations above, on breakage of axles, also lead to the same conclusion.

Mr. Grafstrom has shown that the action of the horizontal force due to oscillation gives the tapered form, shown for the central point of the axle.

The question would then seem to lie between the horizontal oscillations and the vertical. Scheffler says the horizontal component may reach forty per cent of the vertical force. The observations of the writer are that the vertical load may be increased 100 per cent. by vertical oscillation. The writer believes, from the observations so far made, that the latter are greater, and should govern the design of the axle; but it would require a far more extensive series of observations than he has been able to make to definitely settle the matter.

The figure given for the strength of steel under repeated strain, is from Wöhler and Spangenburg's experiments, and was for steel of about 85,000 pounds per square inch ultimate tensile strength.

This figure cannot be said to represent the correct values for steel axles under repeated loads, although the figures for iron may be taken as correct.

A majority of the steel axles made to-day are accepted on the result of the drop test, which test can be passed most successfully by the mildest or softest grades of steel axles, and these are certainly below the tensile strength of the axle steel tested by Wöhler, and must consequently give less resistance to repeated loading.

What difference there would be between the different grades of steel used for machinery, cannot safely be predicated from the tensile strength, as the results so far obtained do not show any very definite relation between the strength under static load and under repeated load.

The question of the durability, or number of repeated loadings, which the material will stand, is one on which very little

Digitized by Google

real information is obtainable. The writer has taken 30,000,000 repetitions of the loading, as the number required to break the axle when under the ultimate stresses allowed for repeated loading. That there is very great uncertainty about the matter, goes without saying.

There are two methods of determining the life of an axle: one by the mileage, and, consequently, by the number of revolutions made; the second, by the wear of the journal. The first would give a very accurate method of determining the life of an axle, with more definite information as to the strength of the material under intermittent stresses.

The method, by allowing the axle to wear down to a given limit, 3½ inches diameter for the journal of the axle shown in the diagram, gives widely varying figures.

When the lubrication is well done and there is little wear, the axle may be allowed to run very much longer than it should. When the journal wears rapidly, the axle is thrown out of service long before it is worn out, on account of the intermittent stresses, and while the journal may be fully strong enough to stand the load.

The most important deduction which the writer has been able to draw from this examination of the strength of axles, is the need of a series of experiments in this country, on the effect of repeated loading on iron and steel, especially with respect to the durability under the different loads.

Such experiments, carefully and accurately made, would give us data upon which to base calculations of sizes of parts of machinery, which are now little more than guessed at.

DISCUSSION.

Mr. George R. Henderson.—There is a point on page 238, in which Mr. Randolph refers to the springs being frequently forced solid. I do not wish to contradict his statement at all, but I thought it might be interesting to state some experiments which were conducted with coil springs, recently, when it was found there was not much likelihood of their becoming solid if they had anything like the usual amount of strength. These springs were designed so that a loaded car would put on them a little more than half the solid load. We took one car, fitted with such springs, and overloaded one end with pig iron about twenty-

Digitized by Google

five per cent. Then we put pieces of putty in between the coils of the springs, ran the car truck up on wedges and dropped the four wheels bodily about three inches, and an examination showed that the putty was not cut through. If springs are of the ordinary strength I doubt if the coils will come together in ordinary practice.

I would like to indorse the last paragraph, page 241, very heartily. If some of our colleges, fitted up for experimental work of this kind, would go into this matter of fatigue of metal thoroughly and carefully, I think we should have information that would be of great advantage to the engineering world generally. There are many theories advanced in regard to the fatigue of metals, with some information of an experimental character, but I do not think it is entirely satisfactory, and if some of our colleges would take that up I think they could make a good report on the subject.

Mr. E. D. Estrada.—I beg not to be considered as over-critical in connection with my remarks about Mr. Randolph's paper on "The Strength of Railway Axles." I earnestly believe that our lack of knowledge on the subject of resistance of materials is, in great measure, due to our carelessness in taking care of "small matters," when it is really these little things which need the most attention. The large ones usually take care of themselves.

On page first of Mr. Randolph's paper we see that a load of 10,000 pounds is considered as acting constantly on each journal. Referring to this load, Mr. Randolph says: "This is constant." There can be no misinterpretation of that sentence. In the next paragraph, referring to the same load, Mr. Randolph says: "This load, while acting constantly, would be of the nature of an intermittent or repeated load, the load being applied first in one direction as regards any one set of extreme fibres, and then in the other." In the first place, a load cannot be considered as acting constantly and be of an intermittent nature. In the second place, if it is applied in one direction it must become equal to zero to be applied in the opposite direction. The conditions assumed by Mr. Randolph cannot be fulfilled. Hence, since the values for the ultimate strength given by Wohler and Spangenburg are supposed to have been determined, under these conditions they cannot be correct.

According to the method here described, an axle under a car, travelling at the rate of 40 miles an hour, would die in about 52

Digitized by Google

days; and an axle on a car travelling at the rate of 100 miles an hour would give up in about two days. There is evidently something wrong in this method of determining the strength of an axle. Let us see if we can find where the error lies. Messrs. Wohler and Spangenburg made experiments, subjecting an axle to a certain number of vibrations, and found that when the number of vibrations was equal to 30,000,000, the axle broke. But, unfortunately, they forgot to tell us what the value of a vibration is. If we are to consider the strength of an axle by the number of vibrations or revolutions which it can be made to resist before rupture takes place, we must have a definite value for a vibration, without which any number of them cannot have any assignable value. According to this method of reasoning, an engine making 400 revolutions per minute would have to stop for a funeral every few hours.

Mr. Randolph may reply that the axle and the shaft do not afford parallel cases; to which I will say that they do until the difference is established.

Mr. L. R. Pomeroy.—I want to call attention also to one statement on page 240. The author says: "These figures" (namely, 85,000 pounds per square inch ultimate tensile strength) "cannot be said to represent the correct values for steel axles." Now I claim that, as manufacturers are producing steel axles to-day, these figures are nearer the value than the value stated. Some few years ago, when axles were made quite soft, 70,000 to 74,000 pounds was a fair average ultimate strength; but of late years roads are requiring a slight increase of tensile strength, so that we have them as high as 92,000, and even to 95,000 pounds tensile strength.

Mr. W. F. Durfee.—I will call attention to a railway journal that is by no means new. In 1874 a journal of the form shown in Fig. 67 was patented by the master car-builder of the St. Paul road. I was living at Milwaukee at the time, and he called my attention to the very wonderful wear of journals made in this way, which had been used experimentally for some years on that road, and he said that he had instructions from the general manager to use that form of axle in the future, and he applied for a patent, and the patent was granted. Of course, the patent has expired. There was absolutely no evidence of end chase in the journals shown

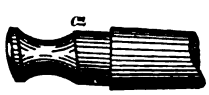

FIG. 67.

Digitized by Google

me, and no scoring in them. The probability is that an axle of this form would have less tendency to fracture at the point *a* than those commonly used. Whether such axles have been continuously used on the St. Paul Railroad I do not know, but I was told that in 1874 authority was given to the master car-builder to introduce such journal-bearing as the practice of the road.

Mr. H. de B. Parsons.—In reply to the speaker before the last, I would state that Mr. Randolph says this load is constant—that

FIG. 68.

is, constant on the journal. He also states, in the next paragraph, "This load, while acting constantly, would be of the nature of an intermittent or repeated load." The stress is intermittent in regard to the fibres, because the axle turns. The fibres on the top of the journal at one moment are the next moment underneath, so that while the load is constant on the journal the stress is intermittent on the fibres.

Mr. G. C. Henning.—This paper does not, I think, touch the critical point of why axles break. In a great number of axle fractures you will see that there is a central part of the axle which broke with a granular appearance, while between this part, which is shown on the diagram (Fig. 68) at *a* by the

Digitized by Google

smallest circle, and the upper edge of it, there are a number of rings shown, in which the material is crushed more or less. Now, every axle is strained very much more in passing over a frog on a switch than by any of the reversed strains mentioned in the paper, oscillations, vibrations, or static loads. These are very small compared to the impact of the axle at the instant of crossing over a frog. Suppose the car is loaded to its maximum capacity, and a frog is struck when the road-bed is very hard, it may crack that axle on one or the other surface, according to how it is strained. If the wheel is outside, as usual, then, of course, the fracture would be likely to occur on top. Now, that axle will run for a long while with that fracture in it. The next time that axle hits a frog it will break a little bit further. The next time it runs under a heavy load and strikes another bad place in the track, it breaks still further. The journal section of the axle has by that time been very materially reduced, and careful inspection reveals these fractures; and when the fracture shows very plainly and opens, why, then, the axle is taken out. But many of them are not found, because of carelessness during inspection. Then ultimately the axle will break with the section of material shown at *a* in perfect condition at the time of rupture; all the rest has been hammered during service, so that it is all polished. But the fracture does not occur uniformly. Some of these rings are wide and others are narrow, just as I show. I have one axle in my office which has at least sixty such distinct rings, which shows that it broke on sixty different occasions. That is the way axles break. They do not break because they are weak. They do not break because the static loads are too great. They simply break because of the enormous impact in crossing over frogs, and they break very gradually.

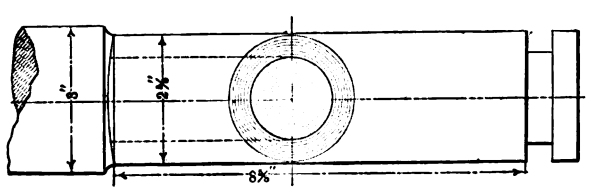

FIG. 69.

Mr. Estrada.—I would like to make a sketch (Fig. 69) representing an axle fracture, as I have noticed several of them. I have with me a fractured end of an axle broken in this way. It

Digitized by Google

will be noticed, from the specimen, that the failure of this axle was the result of the diminution of its normal cross-section, caused by very minute cracks produced from time to time, and under varying conditions.

These cracks started on the surface and continued towards the axis, until the effective area of the axle at this point was less than that required to carry the load; then the axle broke. While "turning" the axle to its proper dimensions, tool-marks were left in the fillet outside of the wheel seat. The fracture starts while the car goes over joints or frogs. It is impossible for the axle to be always in the same relative position while the car is passing over all the inequalities of the track. For this reason, we cannot consider the fracture as taking place in one direction more than in another.

There is another very important point to which I would like to call your attention. Notice that the surface of the gradual fracture is not a plane surface but a spherical surface. This particular case of axle breakage was given to one of our testing laboratories, in order to ascertain what caused the trouble. After making the usual tests, they reported that, while the material of which the axles were made would have been considered as excellent for bridges, it was not good material for axles. This report did not satisfy the superintendent of the street car company, who asked me to make an investigation. I began by making the usual tensile and bending tests with specimens cut from one of the broken axles. The tensile test showed an ultimate strength of 57,000 pounds per square inch, an elastic limit of 38,000 pounds per square inch, an elongation of 25 per cent. in 8 inches, and a reduction of area of 57 per cent. By the drop test, an elongation of 33.5 per cent. in 8 inches was obtained. The chemical analysis showed the carbon, phosphorus, manganese, and sulphur to be well within the limits generally specified for axle steel.

These results do not warrant an adverse criticism concerning the quality of the steel as a material for street-car axles. I made an etching test, but there were no blow-holes to be found. I thought of segregation, but, fortunately, I did not know anything about it, and decided to leave that alone. It was clear that I had to either "throw up the sponge" or follow a new line of inquiry. An examination of several of the broken axles showed that the fractures occurred at a similar place in every axle, thus disproving

Digitized by Google

any theory which might be advanced accounting for the breakages from physical defects of the materials.

Further observation showed that the bending moment had the greatest value when the section where the fillet had been turned was considered. Adding to this the effect of tool-marks on steel the mystery was cleared, and further trouble from that source was completely stopped. Let any one place an axle on a Pittsburgh street-car, and figure how long it will last from the number of revolutions made by any other axle, not taking into account the condition of the street-car tracks in that city, and see what a mistake he will make. Moreover, if the observer is not very careful to look out for himself, there is no telling how long he will be able to continue his observations.

Mr. H. Wade Hibbard.—I think it will be a valuable addition to the information we have gained from the discussion of this paper if some of the members present who have taken part, or not, would give us what they consider the safe life of an axle, either in the number of years it should run or the number of revolutions.

Mr. Estrada.—I can tell you that; an axle may last an hour, a day, a month, a year, or it may last any length of time. Its life depends on how and where you use it. A shaft is nothing but an axle, and notice how long they last, generally. Consider a railroad company in the hands of a "receiver," and it will usually have a bad track, and axles will not last very long there.

Consider a well-paying railroad company, and you will usually find a good track, and an axle on this road will last longer than on the other.

Mr. M. P. Wood.—I think it is the practice of the Pennsylvania and also of a number of other leading roads, that after an axle has been under a car a definite length of time, say two years, or, as by the car record, has made approximately two hundred thousand miles under their passenger equipment, that axle is condemned and taken out, whether it shows any sign of fracture or not, and put into freight service. I think that is getting to be the universal practice with our leading lines of railway.

*Mr. L. S. Randolph.**—In reply to Mr. Estrada I would say Mr. Parsons has fully answered the first part of his criticism. As regards the life of an axle, a freight car seldom makes more

* Author's closure, under the Rules.

Digitized by Google

than thirty miles per day on an average; as regards passenger cars, the conditions of loading are different on account of the difference in the motion of the springs. The loads are not so great as in freight service.

By the number of vibrations Messrs. Wohler and Spangenburg mean the number of repetitions of the load, the amount of the vibration being determined by the amount of the load.

In reply to Mr. Henning, I would say that the phenomena which he describes are quite common. I cannot agree with him as regards the danger from frogs and switches; they are very hard on wheels, but not so much so on axles. A combination of a low joint and high speed will produce a greater load on the axle. As a matter of fact, however, frogs, switches and low joints all go to strain the axle beyond the limits usually calculated upon. As regards the detection of cracks by inspectors, it is impracticable to do it. The writer has saved several side-rods on locomotives from breaking, by detecting cracks, but even on the polished rod they were so minute that it was very difficult to detect them; but with the polished journal of a freight car covered up and the body of the axle covered with dirt and rust, small cracks cannot be readily seen.

Tool-marks are usually the places where cracks start. Clark called attention to this forty years ago. The concentric rings which Mr. Henning speaks of can be produced by an intermittent load. The writer observed a similar phenomenon in experimenting on stay-bolts under a vibrating or intermittent strain, and his observations of fractures known to have occurred from shock would lead him to conclude that the axle which Mr. Henning describes was broken by repeated stresses and not by shock.

I agree with Mr. Henderson that it would be well for some of our colleges to take the matter up, but the cost of the experiments would be so great as to be prohibitory except to the wealthiest. It is a matter which could be best handled by the government.

Digitized by Google

DCXXIV.*

RAIL PRESSURES OF LOCOMOTIVE DRIVING WHEELS.

BY DAVID L. BARNES, CHICAGO, ILL.

(Member of the Society.)

DRIVING-WHEELS of locomotives at speed move so quickly over the track and revolve so rapidly that the maximum rail pressures are much greater than when the engine is at rest. It has not been compulsory in the past to consider seriously the effect of speed on rail pressures, but now the maximum velocity of trains is so high that it is exceedingly important to have a clear understanding of the modifications produced by speed. The object of this paper is to bring forward for discussion an analysis that has been made of the effect of speed on rail pressures.

EQUALIZATION OF RAIL PRESSURES BY LEVERS.

Owing to the great vertical irregularity of railroad track as first laid in this country, equalizing levers were required between the driving springs in order to keep the wheels on the track, to make the weight approximately equal on the drivers, and to make the engine ride steadily. The purpose of these levers is to permit the wheels to rise and fall without such a material change of weight thereon as would occur if each wheel had an independent spring. With independent springs, if a wheel drops down, the rail pressures, being dependent upon the tension on the spring, are reduced because the tension of the spring is reduced. In Europe, where the tracks have been made more nearly level in vertical alignment, the locomotives have been supported on springs

* Presented at the New York meeting (December, 1894) of the American Society of Mechanical Engineers, and forming part of Volume XVI. of the *Transactions*.

Digitized by Google

without equalizers, the weight on the wheels depending very largely upon the stiffness of the springs and the initial set or tension that is given them. For this reason, by altering the initial tension of the spring, the weight can be thrown from one pair of drivers to another. It is one of the tricks of railroad mechanics using locomotives with a single pair of drivers to adjust the springs to give a minimum weight on the drivers when the engine is weighed, as this is more satisfactory to the track engineers, but when the engine goes into service the tension on the driving springs is increased, and this throws a large increase of weight on the drivers, and not infrequently there is more weight used per pair of wheels for such locomotives than is given in the published description. With equalizers an adjustment of this kind is impossible, and any material change of weight on the different drivers can only be made by changing the position of the fulcrum of the equalizing levers.

Where the track is level and smooth, equalizers are not really necessary, but for locomotives having to run in freight yards over bad sidings and rough track, they are required to prevent rough riding, broken frames, excessive wheel loads, and wide variation in the adhesion of the wheels to the track. When one wheel has less weight the other wheels must have more, and if one wheel of a four-driver locomotive, not equalized, drops, say as much as one and one-half inches, there is a very great increase in the load that is carried by the other driver on the same side of the engine, but with equalizers the loads remain nearly the same on all drivers. These are the reasons for using equalizers.

Where complete equalization is desirable, the engine is always supported on three points. One is at the centre of the truck or the centre of one of the driving axles; this is arranged by the use of a cross equalizer extending between the ends of the springs over one pair of drivers. Sometimes, as in the case of a two-wheel truck in front, a longitudinal equalizer is used between the truck and the front pair of driving springs, and in this case the centre point of support is placed somewhere on the longitudinal equalizer and generally underneath the cylinders.

The other two points of support are located one on each side of the engine and always opposite each other. The location of these two supports is generally a "resultant" one; that is, there is no definite point of support, but there is a resultant point, which is the resultant of the forces exerted to support the engine at the

Digitized by Google

different supporting points, which are the fulcrums of the equalizers, and the points where the springs are attached to the frames. In the case of an eight-wheel engine where the springs and equalizers have equal arms, the resultant point is at the centre of the back equalizers, one on each side, but in the case of a consolidation locomotive it is about at the main driving wheel.

The third point of support is generally at the front end of the engine at or near the truck centre.

The resultant points are found by assuming one pound as the weight at any one of the supporting points and calculating by the principle of levers the weight on the other points, and combining these weights as forces to find the resultant force and the location of the resultant point of support. This can also be done graphically.

From what precedes it is evident that the weight of the locomotive, or that part of it which is above the springs, will be distributed between the resultant points of support at the rear, and the single point of support at the centre at the front according to the distances of these points from the centre of gravity of that part of the locomotive that is above the springs.

To find the centre of gravity near enough for practical purposes requires but little arithmetical work, as only the heaviest parts need to be considered. The centre of gravity of the important parts taken together, such as the cylinders, frames, foot plates, cab, grates and boiler filled with water and fuel, practically coincides with the centre of gravity of all parts taken together. In calculating the centre of gravity to find the weight distribution, the wheels, axle boxes and parallel rods should not be considered. Only those parts that are above the springs should be taken into account. The weights of the parts below the springs should be added later to find the rail pressures.

While equalizers are necessary to distribute the weight on the wheels on rough track at slow speeds, they have little effect on the weights per wheel at high speed, except in the case of a two-wheel truck in the front, which might have too much weight taken from it when the engine oscillates at high speed if an equalizer were not used, but even this would apply only to some special designs. At high speeds the velocity of the wheels over the track is so great that there is not time for the wheels to drop down into a depression or to follow down the depression of a weak joint or unsupported section of a rail. Fig. 70 shows how far the body of the

Digitized by Google

locomotive itself would drop, due to gravity at different speeds over different spaces, and also shows how much more the driving wheel will drop, in an average case, than the body of the locomotive, owing to the fact that in addition to the force of gravity there is also a spring, which accelerates the wheel downward. The drop h, due to gravity, is given by the formula

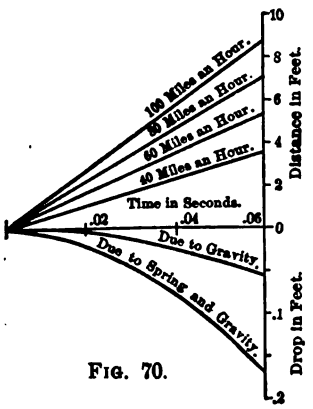

FIG. 70.

$$h = \frac{gd^2}{2S^2}$$

while the drop due to both spring and gravity is

$$\frac{d}{S} = \frac{2}{\sqrt{\frac{eg}{W}}} \text{cotan.}^{-1} \sqrt{\frac{2}{eh}(W + I) - 1},$$

in which W is the weight of the wheel, S the speed in feet per second, and d the distance from the beginning of the drop to the point where it is desired to find how much the wheel has fallen. I is the initial or normal tension of the spring in pounds; e = stiffness of the driving spring per foot of deflection; $g = 32.2$ feet.

Suppose a wheel to have dropped into a depression, then the stress or extra pressure on the track required to lift the wheel out will depend upon the slope of the rail coming out of the depression and upon the speed of the train.

As a locomotive goes along a track the drivers rise and fall according to two conditions; first, the depth of the depressions and rises, and, second, the speed. The faster the speed, the less will be the rise and fall, unless the wheel gets into a vertical oscillation owing to regularity and succession of the depressions and rises. Vertical oscillations, because of such regularity, probably seldom occur. To mount over a rise increases the pressure on the track in the same way as when the driver is rising out of a depression.

From this it is clear that the weight on the driving wheels at high speeds is a variable quantity depending little on the equalizers and mainly on the speed, stiffness of springs, inertia of the

Digitized by Google

mass of the wheels, and greatly upon the weight of the reciprocating parts, as is explained later.

Omitting, for the time being, the consideration of the counterbalancing, the following factors affect the weight in the manner described:

Given a track with rises and depressions, the heavier the driving wheel the less will be the distance which it will be forced by the spring to drop in a given time, and the greater will be its inertia or resistance when being lifted out of a depression or over a rise.

The stiffer the spring, the greater will be the drop of the wheel in a given time, and the more will be the increased pressure on the track due to lifting the wheel out of a depression or over a rise.

For a given depression, the shorter the distance in which the wheel is lifted out of it or over a rise, the greater will be the pressure on the rail.

As a wheel comes out of a depression or goes over a rise it will lift more than it dropped into the depression and more than the height of the rise, and if the rise is considerable and the speed is high the wheel may lift clear of the track. This is practically illustrated by the peculiar wear of rail heads at joints, where trains run at high speed always in the same direction.

What is said here about driving wheels is equally true of all the wheels in the train, but as the weights of other wheels than drivers are less, the increase of rail pressure is also less.

Rail pressures for the *main* drivers are affected by the angularity of the connecting rods. For locomotives running ahead the rail pressures are increased by the push and pull of the connecting rods, but for locomotives running backward the rail pressures are decreased by the same action. It is evident that the weight of locomotive drivers on the rails, as measured by track scales, is only the normal weight and is but little indication of the maximum rail pressures. This will appear from Fig. 71, which shows the possible variation in rail pressures under the drivers due to a locomotive travelling at various speeds, due to "excess balance" alone, and not including several other factors, which make the rail pressures vary.

Some very interesting and valuable data about the deflection of track under locomotives when standing still have been gathered by Mr. James E. Howard, of the Watertown Arsenal, and Mr. C. F.

Digitized by Google

Delano, Superintendent Freight Terminals of the Chicago, Burlington and Quincy Railroad at Chicago. These data will be found

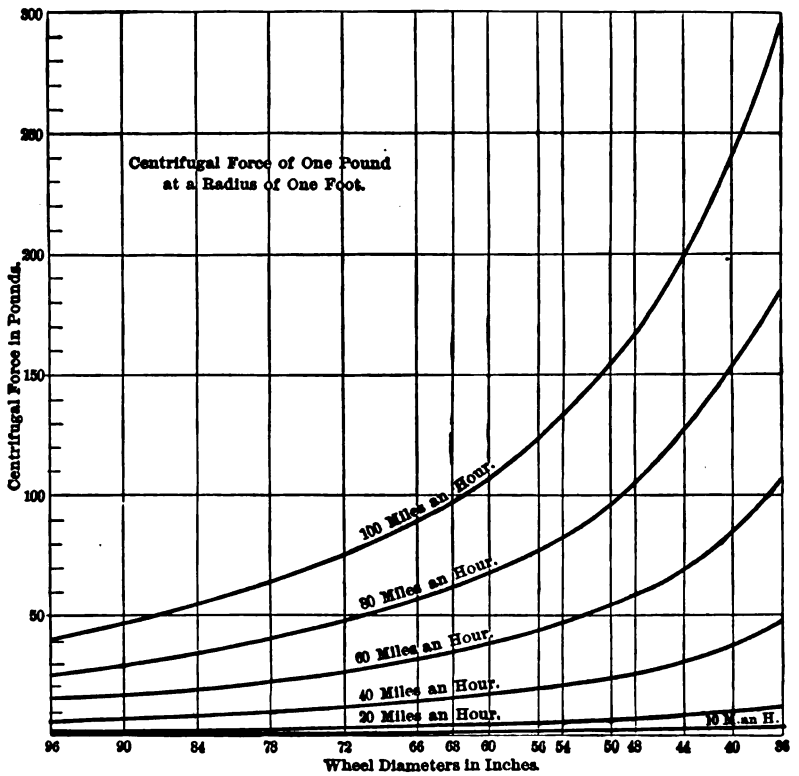

FIG. 71.

Variation of rail pressures due to centrifugal force of "excess balance," with different diameters of drivers.

in the *Railway Review*, March 24, 1894. The calculations in this paper about lift of locomotive drivers are based on these data.

THE GENERAL EFFECT OF COUNTERBALANCING ON RAIL PRESSURES.

The counterbalancing of reciprocating engines has been well studied mathematically. For stationary engine work in which it is necessary to calculate accurately the effect of reciprocating parts, a valuable analysis has been presented to this Society by Prof. D. S. Jacobus. See *Transactions*, Vol. XI., p. 492.

For locomotives it has been found that from one-third to one-half of the weight of the reciprocating parts need not be balanced,

Digitized by Google

although on some railroads it is customary to balance all reciprocating weights. The roughness of locomotive service permits a decrease of the balance for reciprocating parts of at least one-third without causing disagreeable longitudinal oscillations and lateral motions of the engine. Some interesting information about this matter has been presented to this Society by Prof. Gaetano Lanza. See *Transactions*, Vol. X., p. 302.

The balancing of the revolving weights should be complete, and this is done in the ordinary way of balancing fly wheels.

One fact that has been determined by practical experience simplifies the investigation of the effect of the necessary counterbalancing for locomotives; it is that, so far as the locomotive itself is concerned, the balancing is practically perfect when the balances are placed in the wheels opposite the crank pins, and when all of the revolving parts are balanced and not more than 100 pounds of reciprocating parts for light engines, and 300 pounds for heavy engines, are left unbalanced. When scientifically analyzed, this method of balancing is found to be imperfect, and such analysis shows that the balancing would be more exact if the counterweights were placed not quite opposite the cranks and if an additional balance to counteract the effect of the balances on the opposite side was placed in each wheel at right angles with the crank, but in practice such a plan prevents the duplication of the wheels and gives no better results than the simpler plan commonly followed, that is, if the reciprocating parts be not unnecessarily heavy. The effect of putting in the additional counterweight is to increase the maximum rail pressure, which is too great under the simpler plan of counterbalancing, and, therefore, the additional balance would better not be used unless for locomotives already constructed where the fundamental design is bad and such balance is added for correction of existing evils. A very complete account of the value of the additional balance is given in the *Transactions*, Vol. X., p. 302, Lanza.

The practical problem of balancing is not one of "how to balance," but of reducing the total weight of the reciprocating parts to a minimum. What can be done in this way to improve locomotives is indicated by what has been done in decreasing the weight of pistons, cross-heads and main rods. These parts on American locomotives are generally heavier than are necessary for the service, and a reduction of one-half in weight is possible in many cases. The average possible reduction may be taken as 40 per cent. for

Digitized by Google

all designs. An example of what can be done and has been done is found in Figs. 72, 73, 74, and 75, which show pistons in com-

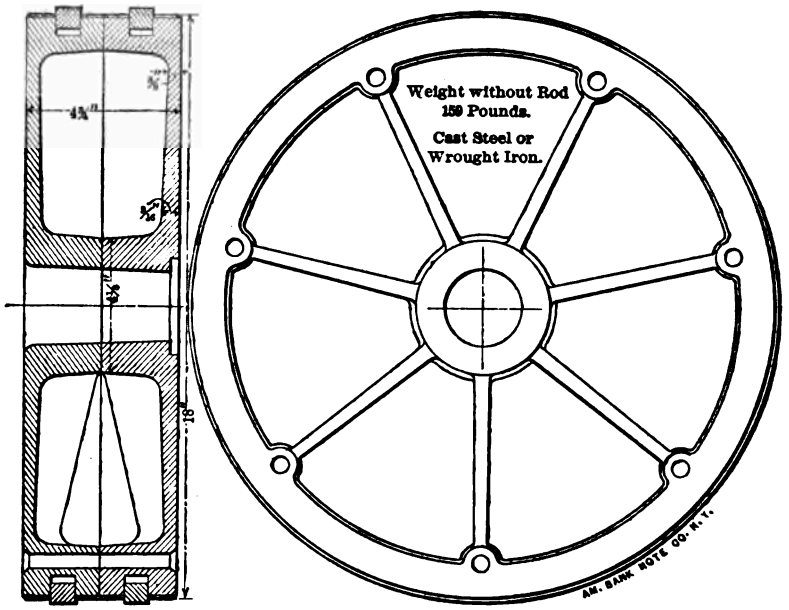

FIG. 72.—Common form of piston.

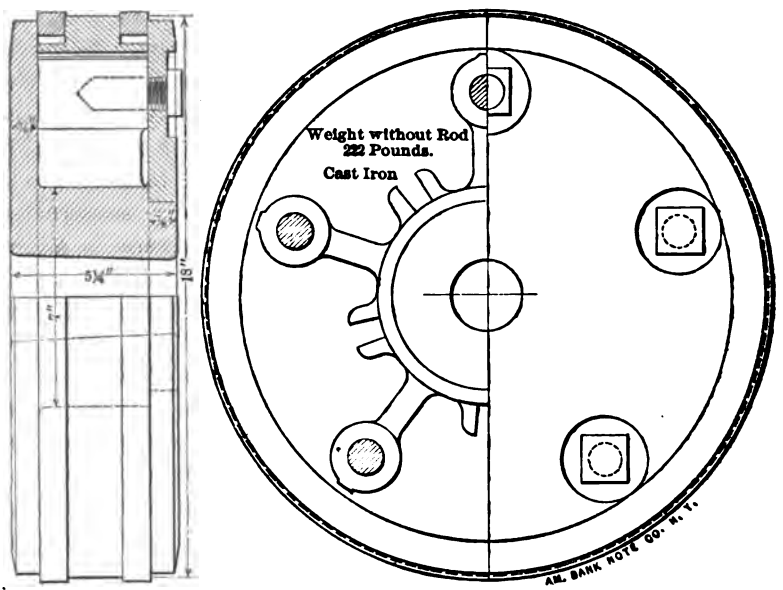

FIG. 73.—Common form of piston.

Digitized by Google

mon use for the same size of cylinder. The weight of the lightest is but 54 per cent. of the heaviest. Even more striking

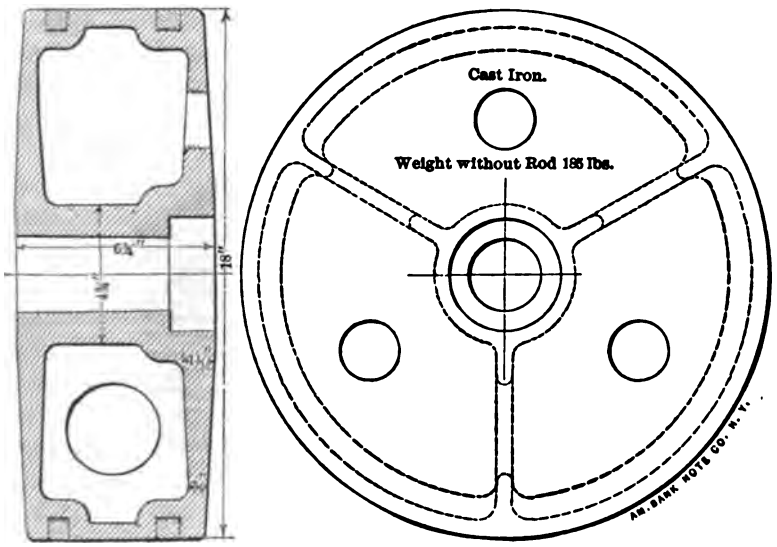

FIG. 74.—Common form of piston.

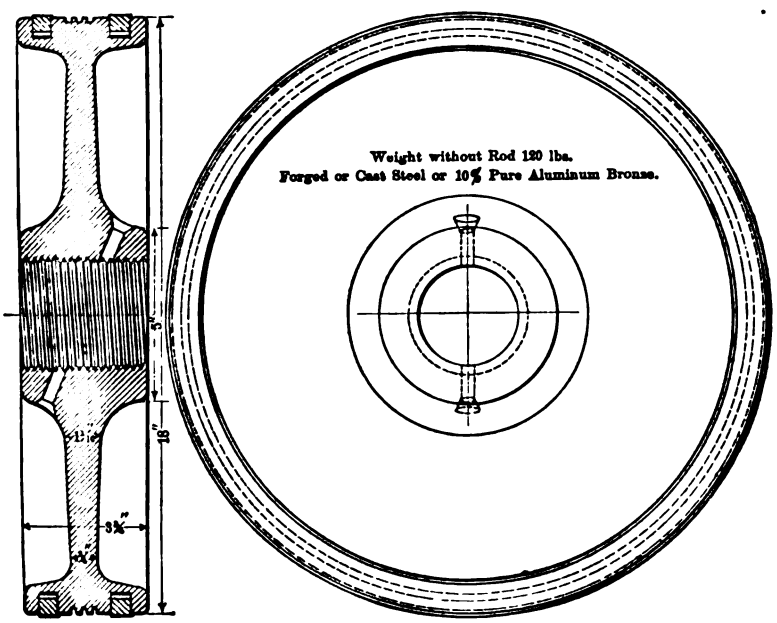

FIG. 75.—Common form of piston.

Digitized by Google

examples of reductions can be found in crossheads and main rods. It is only within the short time since high maximum speeds have become common practice that the effect of heavy reciprocating parts has been such as to call attention to the need for reductions in weights. Now bent rails and damaged track reports are too common to permit further neglect of a proper consideration of the weights of reciprocating parts.

FIG. 76.

Fig. 76, taken from the *Railroad Gazette*, August 24, 1894, p. 573, is an illustration of what will be caused by a locomotive having heavy reciprocating parts, even if perfectly balanced, when run at high speed. It is also an equally good illustration of the effect on the track of running locomotives in freight trains without the rods at moderate speed. The illustration teaches the need of using the strongest and lightest designs for the reciprocating parts, almost regardless of the first cost, and shows that locomotives should not be shipped without the rods, unless equivalent weights are put on the crank pins opposite the counterbalances. Because of neglect of these two important matters short lengths of track, on several roads, have been badly damaged within a year, and a few bridges have had tie rods broken. How much track has been injured, and how many bridges have been weakened by hauling dead engines in freight trains, there is no means of knowing, as it is only when the track is quite badly damaged, and parts of the bridges are cracked or broken, that the track and bridge inspectors discover the damages. Probably it is only when the damage is serious and takes place within a very short time, and in this way is made impressive, that the inspectors will report such damage and give the true cause.

Digitized by Google

No doubt heavy locomotives injure the track more than lighter ones because of the greater weight, but it is by no means certain that the heaviest consolidation engines, or engines having great weight per wheel, when run at moderate speeds, injure the track as much as lighter locomotives when run at high speeds, yet, if the heavier locomotive was run at the same high speeds with equal weight of "excess balance," the effect would, of course, be worse. The point of this is, that when track is damaged, particularly at the foot of grades, the cause may not always be found with the heavier locomotives having the greatest weight per wheel, but is more likely to be found with those engines having small wheels and heavy reciprocating parts, where the number of revolutions per minute is high, although the speed may be moderate.

An important example of damaged track caused by light engines is one that occurred last year on a line where there are engines with weights per wheel varying from 13,000 to 18,000 pounds, the types being eight-wheelers, ten-wheelers and consolidations. The damage was caused by the lightest type of engine running at an excessive speed on a down grade. In another case a light eight-wheeler was run without rods in a freight train at 50 miles an hour, and the result was two miles of badly damaged track and two broken bridge rods. In another case a consolidation engine was broken down on one side and the rods were taken off on that side and the engine was run faster than schedule speed to make up time. The effect was several miles of bent rails.

The bends are seldom noticeable unless they are as much as one-eighth of an inch. Occasionally the bends are as much as one inch vertically and half an inch horizontally inwards toward the centre of the track, the horizontal bending being undoubtedly due to the fact that the rail is supported on the bottom flange and the load is applied on top, and generally nearer the inner than the outer edge, as shown by the arrow, Fig. 77. It is quite to be expected that the rail should bend inward at the top, as such is the case with all rolled sections when tested beyond the elastic limit with loads applied in the same way. This tendency toward the inner bending is no doubt increased by the yielding character of the support, viz., the wooden tie under the rail.

It has been held that the lateral throw of the rear end of locomotives will cause the lateral bending of the rails. It is claimed

Digitized by Google

that when the right-hand crank leads, for instance, and the reciprocating parts and rods are on the rear dead centre on the right side, there is sufficient lateral pressure to bend the rails inward on the right side. The reasons given are that at that point of revolution there is one of the maximum tendencies to "nosing," and the right wheel is on the rail with about the normal load, while the left wheel at excessive speeds is off the rail, the left hand counterbalance being up. It is held that the rear of the locomotive slides to the left on the right rail and drags that rail with it. It is clear, however, that any action of this kind, while it might give the rail a long inward bend, could not give it a short bend inward. If the normal weight of the rear wheel on the rail was ten tons, the lateral force might be as great as 6,000 pounds. This is a considerable force, and the moment of it around the centre of the engine is 177,000 foot pounds. If the tendency to "nosing" was sufficient to cause this moment the lateral shaking would be very severe, and that is one reason why this theory is not apparently correct.

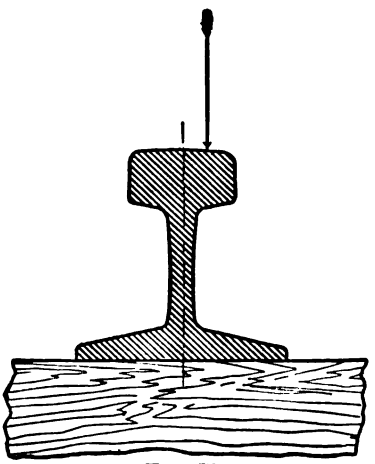

FIG. 77.

Pressure applied at one side of the centre of rail, causing it to bend inward.

The value of heavy bridge floors, ballasted with rock, as a means of reducing the vibration of bridges when locomotives are passing over, is apparent from the evident effect of the "excess balance" in producing wide and rapid variations of rail pressures.

Contrary to what one might suppose from the extent of the discussion there is nothing to prevent practically perfect counterbalancing. Theoretically it is not possible to exactly counterbalance the reciprocating parts of a locomotive with a balance revolving in the wheel, but practically the weight of the locomotive is so great in proportion to the forces remaining unbalanced that the engine is not more shaken than can be permitted. To keep a locomotive in perfect balance the centre of gravity of the whole machine must remain in the same position longitudinally and

Digitized by Google

vertically at all times, but this can only be when the parts are moving in such a way as not to disturb the centre of gravity. If one part moves ahead another part of equal weight must move back an equal distance with the same velocity at all times; that is, when the two parts start from the same point. But if the parts start from different points the weights or the velocities must be different, that is to say, the parts must always so move that the centre of gravity is unchanged. If the reciprocating parts are heavy and the engine is light, the unbalanced forces may be greater than can be permitted, but as engines are now built and balanced the result is practically perfect so far as the locomotive is concerned.

The effect on the track depends little upon the method adopted for counterbalancing, and is almost wholly fixed by the weight of the reciprocating parts. In any given locomotive there can be unbalanced forces without shaking the engine too much, and the amount of the unbalanced force that can be permitted depends upon the gross weight, and, also, somewhat upon the length of the engine. The longitudinal shaking, called "plunging," is not affected by the length of the engine, but the lateral shaking, called "nosing," is generally less with long engines than with short ones, as the inertia of the locomotive and the moment of the resistance of the friction of the drivers to lateral slipping is greater.

If the cranks on opposite sides of the engine could be placed at the same angle, that is, both ahead or back at the same time, there would be no tendency to "nosing," as the forces that produce it would balance. When the cranks are at 90 degrees the maximum tendency to "nosing" occurs at the different points of revolution on the two sides. This is true of the steam valve inertia as well as the inertia of the reciprocating parts. When the cranks are at 180 degrees, the resultant force which produces "nosing" is, in the main, doubled, and, so far as "nosing" is concerned, it is easier to balance locomotives having two cranks when the cranks are at 90 degrees than when at 180 degrees.

Owing to the fact that the counterbalances in locomotive drivers are not in the same plane vertically as the crank pins and rods which they balance, there is a resultant turning force, tending to turn the locomotive laterally or cause "nosing."

Perfection of counterbalance of reciprocating parts is not only unnecessary, but quite undesirable, as it increases the effect of

Digitized by Google

the counterbalances on the track. The part of the counterbalance which affects the track is not that part which is used for the revolving weight, as that is balanced in all positions by the revolving parts. It is the part that is used for the reciprocating parts, and known as the "excess balance," that injures the track, as its centrifugal force is counteracted only horizontally. Vertically this part of the counterbalance is free to lift the wheel from the track or increase the pressure on the rail, and this is the only reason why it is very desirable to use as little counterbalance for the reciprocating parts as possible. If all counterbalance for reciprocating parts is omitted, the effect is to cause "plunging" and "nosing." With a given weight of unbalanced reciprocating parts and a given speed, the lighter the engine the greater will be the oscillation, both in "nosing" and "plunging." The heavier the locomotive, the less will be the per cent. of reciprocating weight that needs to be counterbalanced. The limit of the counterbalance that must be used for reciprocating parts is found when the oscillations are not too disagreeable for the engineer and fireman, and for the mail clerks in the postal cars, which are usually run at the head of the train. The "plunging" oscillations are the only ones that affect the cars, and these, even in rather extreme cases, do not extend farther than the third or fourth car from the engine.

The effect of the "excess balance" is peculiar, and has been studied by mathematical analysis in a limited way, and by chalking the track and running a locomotive over at high speed. In such cases it has been found that the drivers lifted from the track. The distances between the depressions of the rails correspond nearly with the circumference of the driving wheels. The same effect is produced to a greater extent when locomotives are hauled over the road at fast freight speeds with the rods removed. In such cases nearly all of the counterbalance weight becomes an "excess," and is to be treated just as an "excess balance" for reciprocating parts. Damage to the track from this origin has caused orders to be issued on some roads that locomotives without rods shall not be hauled at a speed exceeding twenty miles an hour. Professor Goss, at Purdue University, has shown very clearly that locomotive drivers lift from the track at high speeds.*

It was proposed by the Master Mechanics' Association in 1886

* See paper No. 625 of this meeting, *Transactions* A. S. M. E., Vol. XVI., p. 305.

Digitized by Google

(see *Proceedings*, p. 156), that an apparatus be constructed for measuring the effect of the "excess balance," and drawings were made, but the machine was not built. The inefficiency of any such apparatus appears from the fact that when strong enough to withstand the shock its weight would be so great that its inertia would destroy the accuracy of the record. In dynamometer car work the car is placed next to the locomotive; and the oscillation longitudinally due to the unbalanced portion of the reciprocating parts, even on what are considered to be well-balanced engines, is distinctly visible on the diagram. The effect of the oscillations is to cause a variation of the recording pencil, which corresponds with the revolutions of the drivers. This small oscillation is neither disagreeable to the engineer and fireman nor detrimental to the locomotive. To get perfection of counterbalance, locomotives have been hung up on chains clear of the track and have been run at high speed. A pencil attached to the front of the engine describes an ellipse in a horizontal plane with an axis inclined to the centre of the locomotive. It is possible to add sufficient balance and so locate it as to reduce the amplitude of the vibrations in a horizontal plane to a very small amount, but such perfection is not necessary in practice and is not desirable, as it requires more "excess balance," and the bad effect on the track is increased.

The Cycloidal Path.—While it is true that a counterbalance travels, with respect to the surface of the earth, in a path that resembles a cycloid and is, in fact, a trochoid, yet with respect to the engine the counterbalance travels primarily in a circle, and only varies from that path with respect to the engine when the rail deflects or the driver lifts from the rail. It seems hardly necessary to say, that in making calculations about the effect of the counterbalance, either on the track or on the locomotive, the trochoidal path with respect to the surface of the earth need not be taken into account any more than it is necessary to consider the trochoids which the counterbalance describes when referred to the path of the earth around the sun, and the still other trochoids which astronomers tell us all objects on the surface of the earth are describing in space. The only reason for mentioning this fact here is, that it has been said that analyses of the effect of counterbalances are not of much account unless they are based on the trochoidal path. The fallacy of such an assumption is perhaps made apparent when one remembers that

Digitized by Google

the effect of the counterbalances is the same whether the track stands still with respect to the earth and the locomotive runs over it, or the locomotive stands still with respect to the earth and the track is moved. The fundamental principles of the effect of counterbalances are simple; it is only the varied conditions of elasticity of track and the angularity of the cranks that makes the problem somewhat complicated in practice.

Extent and Location of Balanced and Unbalanced Forces.—Fig. 78 shows the plan and Fig. 79 the elevation of the principal driving mechanism of an outside cylinder locomotive, that being the type now under examination. The cranks are at 90 degrees, the right hand crank leading. It will be noticed that the centre of the connecting rod is outside of the parallel rod, and the centre of the parallel rod is outside of the centre of the counterbalances

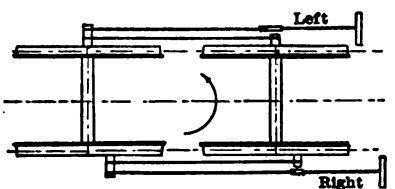

FIG. 78.—Location of forces in horizontal plane.

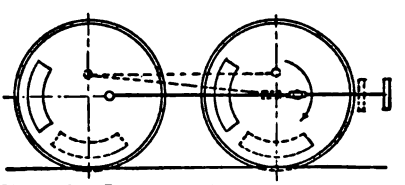

FIG. 79.—Location of forces in vertical plane.

in this design. In most fast engines the centre of the connecting rod is inside of the centre of the parallel rod. The forces tending to rotate the engine horizontally when looking down on the engine, are shown by the arrows. The centrifugal force of the counterbalances acts practically over the rail line, but the centrifugal force of the revolving parts, and the inertia of the reciprocating parts, act outside of the rail line. The resultant of these forces tends to revolve the engine first in one direction and then in the other, and thus cause "nosing." When the cranks are on the opposite end of the stroke from that shown, the tendency to revolve in a horizontal plane is in the opposite direction.

The forces tending to produce "nosing" may be divided into two parts for examination, first, those arising from the centrifugal forces of the revolving parts and their counterbalances. These forces are equal, as the revolving parts should always be fully counterbalanced. Second, the inertias of the reciprocating parts and the centrifugal forces of the counterbalances that are used for reciprocating parts and known as the "excess balance."

Digitized by Google

The inertia and the centrifugal force of the "excess balance" are not equal, as only about two-thirds of the reciprocating parts are generally balanced, and there is, therefore, a preponderance of inertia which may be termed the "excess of inertia." This "excess" can be greater on heavy engines than on light ones, as a given "excess" will shake a heavy engine less than a light one. In this consideration of the forces producing "nosing," the horizontal component of the centrifugal forces is meant when those forces are referred to.

Taking, as an example, the locomotive that has been considered

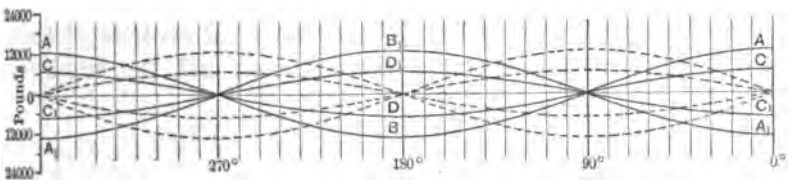

FIG. 80.—Centrifugal forces of the revolving parts and their counterbalance.

in another part of this paper, Fig. 80 has been drawn to show the variation of the horizontal component of the centrifugal forces of the revolving parts and their counterbalances, omitting the crank pin hub and that part of the crank pin which lies within the hub, and also that part of the balance that is used for these parts, for the reason that the centrifugal forces of these

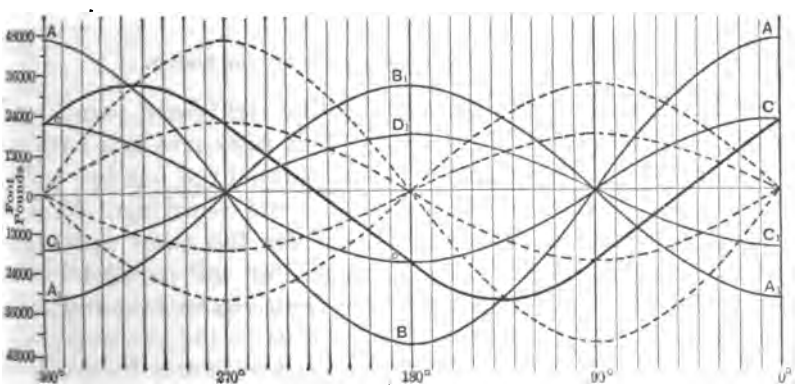

FIG. 81.—Moment of the centrifugal forces causing nosing.

masses do not tend to produce "nosing," as they revolve nearly in the same plane.

Fig. 81 shows the moment of the forces of Fig. 80 and their

Digitized by Google

resultant moment around the centre of the engine, and indicates the tendency to "nosing," caused by these forces.

Fig. 82 shows the forces of the inertia of the reciprocating parts, and the horizontal component of the centrifugal forces of the "excess balance" used for these parts.

Fig. 83 gives the moment of the forces in Fig. 82 and their resultant, which indicates the tendency to "nosing," caused by the reciprocating parts and the "excess balance."

Fig. 84 shows the combined effect of the inertia and centrifugal forces to produce "nosing."

On these diagrams the lines have the following signification:

Fig. 80: *A B* is the horizontal component of centrifugal force of the right hand back end of the main rod and the crank pin

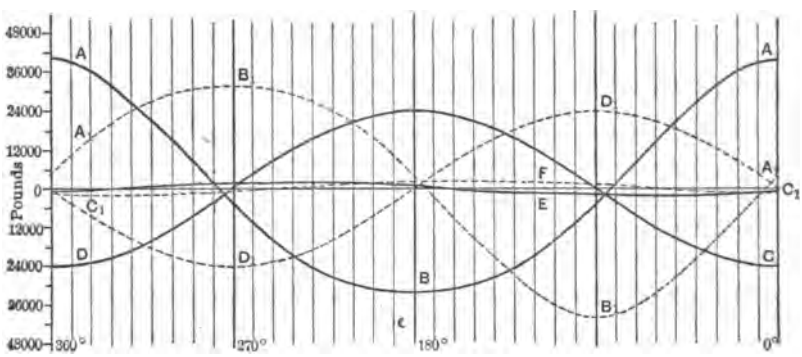

FIG. 82.
Inertia of the reciprocating parts causing nosing.

that is within it. *C D*, the same for the right-hand parallel rod and the crank pin within the rod. This last curve is to be taken twice in getting the resultant, as the parallel rod has two ends.

$A_1 B_1$ are horizontal components of the centrifugal force of that part of the counterbalance used for the main rod as described for line *A B*. $C_1 D_1$ the same for the parallel rod as described for *C D*. This last curve is also to be taken twice in forming a resultant as described for *C D*.

The dotted lines show the same data for the left hand side of the engine, the ordinates of the dotted curves being the same as the full curve, but displaced laterally 90 degrees.

Fig. 82: *A B* is the inertia of the reciprocating parts on the right hand side, allowance being made for the angularity of the connecting rod. *C D*, horizontal component of the "excess

Digitized by Google

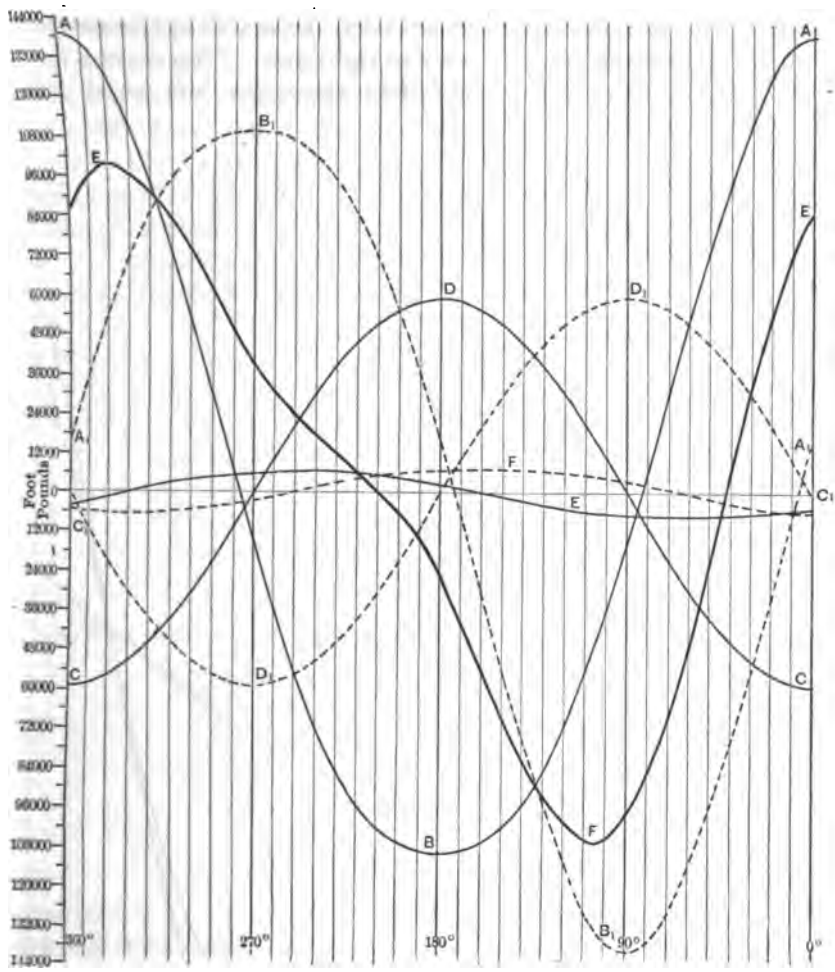

FIG. 83.—Moments of the inertia of the reciprocating parts causing nosing.

balance" used for the reciprocating parts, right side. A_1B_1 and C_1D_1 give the same data for the left hand side. These are the forces tending to produce "nosing," and that result from the reciprocating parts and their balances. The forces producing "plunging" are somewhat less in amount, as shown in Fig. 85. Lines *E* and *F*, Fig. 82, show the inertia of the slide valve. The dotted lines refer to the left hand side, and the full lines to the right hand side.

Fig. 83: Line *A B* is the moment of the inertia of the reciprocating parts on the right side around the centre of the engine,

Digitized by Google

tending to turn the engine horizontally. Line $C\,D$ is the moment of the "excess of balance" on the right side. The dotted lines A_1B_1 and C_1D_1 give the same data about the left hand side.

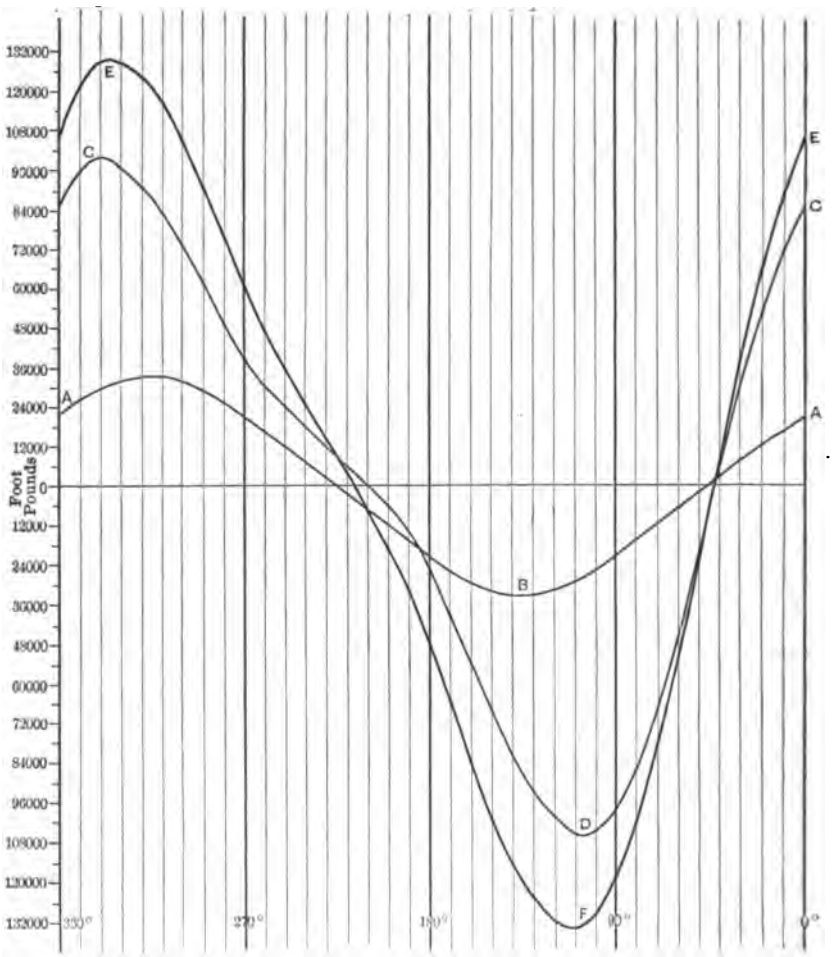

FIG. 84.—Combined centrifugal forces and inertia causing nosing.

Lines E and F show the moment of the inertia of the steam valve. The heavy curve, $E\,F\,E$, is the resultant of these moments, and indicates the relative tendency to "nosing," produced by the reciprocating parts at different points of a revolution.

Digitized by Google

The ordinates above the horizontal line indicate the tendency to rotate the engine from the right to the left hand side at the front, and the ordinates below indicate the reverse tendency.

Fig. 84: Line $A\,B$ is the resultant tendency to "nosing" produced by the revolving parts and their counterbalance, and is taken from Fig. 81. Line $C\,D$ is the resultant tendency to "nosing" produced by the reciprocating parts and the "excess balance," and is taken from Fig. 83. Line $E\,F$ is the final resultant, and shows a total tendency to "nosing" at different parts of a revolution.

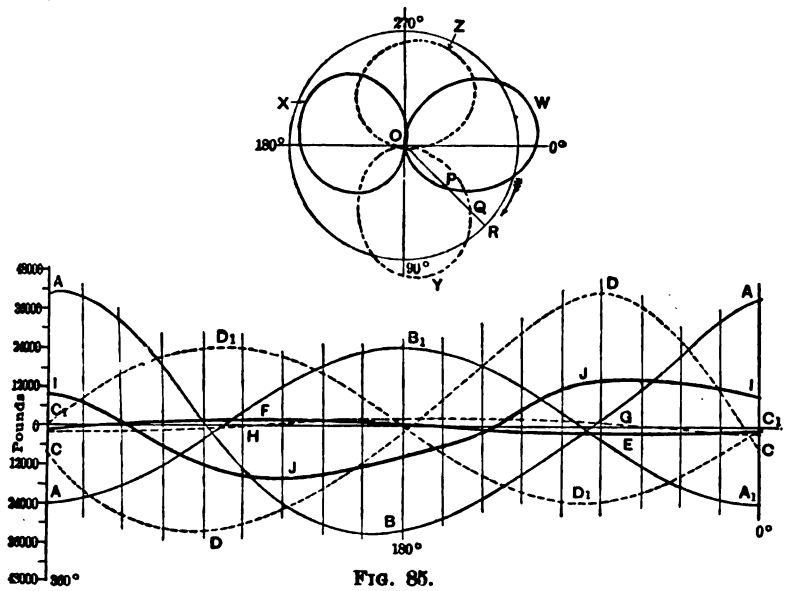

FIG. 85.

Resultant of the inertia of the reciprocating parts on both sides and the tendency to plunging.

If the centre of rotation is not taken at the centre of the engine, but is taken at some other point, the resultant curve would be different, except in a special case where the centre is taken at one rail. It happens, when one rail is taken as the centre, that the variation of the forces follows about the same law, and the resultant curve is the same. An interesting application of this fact is as follows: When a locomotive is running at high speed with a large "excess balance," and with drivers of moderate diameter, the drivers may be off the rail during nearly a half revolution when the counterbalance is up, and at that time the moments may be taken with the bearing of the wheel on the opposite rail as a cen-

Digitized by Google

tre. Supposing a case of this kind with the cranks at right angles and the right hand crank leading, it will then be that the centre of motion from zero degrees (that is, when the right hand crank is on the front dead point and the motion in the direction of the hands of a watch) will be on the left hand side to 90 degrees, and then both balances being up, the wheels will be practically all off the track at the same time (no doubt this often happens in extreme cases), and the moments should then be taken around the centre of the engine. At 180 degrees the centre would become the right hand rail, and continue so until 360 degrees. Now taking this shifting centre, it is found that the moments of rotation in a horizontal plane that tend to produce "nosing" are the same as when the centre is taken on the centre line of the engine. They are as shown by line *E F E*, Fig. 84. From this it is apparent that the maximum tendency to "nosing" occurs about at 110 and 335 degrees of revolution when the right hand crank leads.

The forces acting in a locomotive in motion that have reversal of direction and that are difficult to balance are only those resulting from the motion of the reciprocating parts, viz., the main steam valves, the cross-head, piston and rod and part of the main rod. The steam valves are not heavy in proportion to the whole locomotive, the stroke is short at high speeds, and the inertia is therefore small and does not shake the engine so much as to require independent balancing. If counterbalances are placed in the wheels to counterbalance the inertia of the valves, they should be placed behind the cranks. It will be seen from Figs. 83 and 85 that the inertia of the steam valves tends to increase the "nosing" and decrease the "plunging" of the engine. The relative amounts of the inertia of the valves and other parts are shown in Fig. 82.

The revolving parts are perfectly balanced by placing in the wheels such a mass that its centrifugal force shall be equal to the centrifugal force of those parts, and all that need be considered about the revolving parts is the fact that the balances in the wheels and the revolving parts do not revolve in the same plane, and this causes a tendency to "nosing," which may be counteracted by putting an additional counterbalance in the wheels on the opposite sides of the engine. This has been explained in *Transactions*, Vol. X., p. 302, Lanza.

When a locomotive moves laterally at the front or rear end in the track, the point around which it turns as a centre is rather difficult to determine, as there are other resistances to motion

Digitized by Google

beside the inertia of the locomotive itself. If a locomotive was suspended in chains to test the balancing, as has been done in some cases, the only resistance to turning would be the inertia of the engine, and, therefore, the centre of motion would be practically around the centre of gravity; but when the locomotive is running on the track, no material movement of the front or rear end laterally can take place without sliding the front or rear drivers laterally on the rail. Any motion to the extent of the freedom of the body of the locomotive to move independently of the wheels, such as is permitted by the lateral freedom of axle boxes, would approximately take place around the centre of gravity of that part of the locomotive above the springs. This is true of such motion as is permitted by the swing motion of the front truck, and the front or rear of the engine can oscillate to some extent without moving the wheels laterally on the track; but all the reciprocating parts, except the steam valves, act directly on the crank pins which are rigid with the wheels. Therefore, any lateral movement of the engine that is produced by the inertia of these parts must result from some lateral movement of the drivers on the rail. It is not, of course, necessary that the drivers should move laterally so much as the extreme "nosing" of the engine would indicate, for the reason that a slight movement of the drivers laterally will set up lateral oscillation of the front and rear end of the locomotive, the amplitude of which depends on the freedom of the locomotive in the axle boxes, etc. So that, while the lateral motion of the drivers at the front and the rear end may be one-half an inch, yet the freedom of the locomotive in the axle boxes may permit a motion of two inches, and the amplitude of the "nosing" would be two and one-half inches. Slight lateral movement, due to the inertia of the reciprocating parts, may set up quite an appreciable oscillation at the front and rear ends.

In determining exactly the centre of motion around which the locomotive would turn horizontally under the effect of the reciprocating parts, the resistance of the wheels to slipping laterally on the track must be taken into account. But this is difficult, as the pressure of the drivers on the rails is variable. However, in practical cases, only the maximum effect of the reciprocating parts need be considered. This takes place when the cranks are near the dead centres forward and back. Commencing with the right hand side, with the locomotive moving ahead and the right hand

Digitized by Google

crank leading, the pressure of the right hand drivers on the rail, when the inertia of the reciprocating parts is greatest, namely, at the ends of the stroke at 0 degrees or 180 degrees, is approximately normal; that is, it is about the weight of the locomotive on the track when standing still. On the opposite side of the engine, at the same instant, the pressure of the drivers on the track is more than normal, as the counterbalance on that side is down. When the right crank is at 180 degrees the pressure of the left wheels on the track is less than normal, as the counterbalance on that side is then up. It will accord with practice, near enough for a general discussion, if it is assumed that, when the counterbalance is up, there is no pressure on the rail, and, when the counterbalance is down, there is at least double the normal pressure on the rail. In this way it is found that the resistance to lateral movement of the wheels on the track, and, therefore, the resistance to lateral oscillation, is greatest when the two cranks are up—that is, the right crank is about at 215 degrees—and it is least when the right crank is at 45 degrees. However, at high speeds, the peculiar motion of the centre of the driving wheel vertically in the frame jaws makes it practically impossible to determine where the real centre of motion of the engine during "nosing" is; but, wherever it is taken, the "nosing," by calculation, will be found to be practically the same as when it is taken on the centre line of the engine.

With the right hand crank leading, the tendency to oscillation is slightly greater toward the right than toward the left at the front end and the reverse at the back end, see Fig. 84. If the left hand crank leads, the opposite is true, but as the amplitude of "nosing" is more dependent upon the freedom of the locomotive in the boxes than upon the lateral sliding of the wheels on the rail, it is not generally the case that there is an important preponderance of oscillation to the right of the centre of the track, or, practically, any more flange pressure on the right rail because of this action when the right crank leads.

Plunging.—The reciprocating parts and their balance are alone the parts that affect "plunging" after the train has been raised to a speed of 30 or 40 miles an hour. At lower speeds the variation of the moment of rotation, or torque, at the axles may cause a lurching forward of the locomotive when the torque is growing to a maximum, and a slight recoil as the minimum approaches.

Digitized by Google

Fig. 85 shows the "plunging" which may be expected from the inertia of the reciprocating parts. The polar curves, *W*, *X*, *Y*, *Z*, give the horizontal effect of the inertia of the reciprocating parts on the axle boxes as shown by the full lines for the large wheel, Fig. 86. The dotted curves, *Y* and *Z*, Fig 85, represent the left hand side, and are so located that the distances *OP* and *OQ* show the forward or backward tendencies for the point of revolution *R* on both sides. Below the polar curves, the crank circle is developed to form a straight line, and the polar ordinates are laid out vertically for the purpose of drawing a resultant line. Line *AB* is the pressure, forward or back, from the right hand reciprocating parts, and *CD* from the left hand. A_1B_1 and C_1D_1 are the pressures from the "excess balance" taken from Fig. 87. The lines *EF* and *GH* are the steam valve inertias, the dotted line being for the

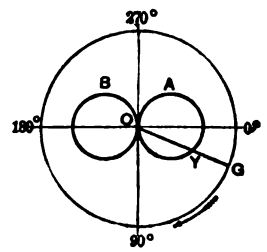

FIG. 86.

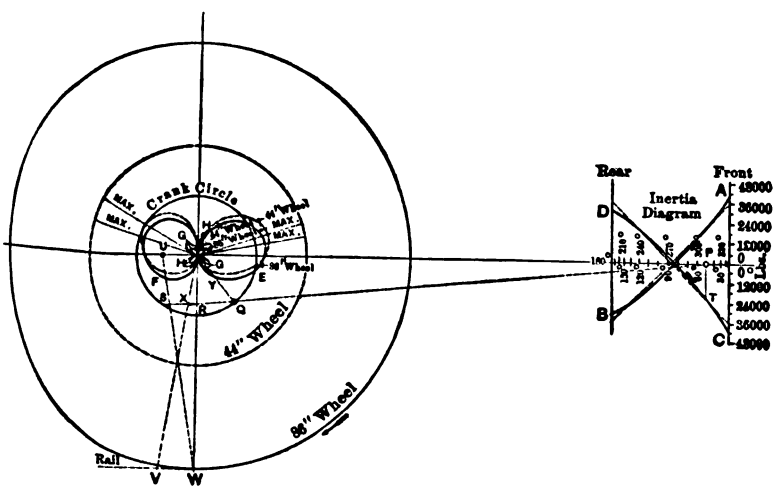

FIG. 87.—Pressure of inertia of reciprocating parts on axle box.

left hand side. The pressures ahead are above the horizontal line, and the pressures back are below. The curve *IJ* is the resultant of these forces and represents the relative tendency to "plunging" at different points of a revolution. The effect is, at a maximum, about at 60 and 240 degrees.

Digitized by Google

The "excess balance" used for these diagrams is two-thirds of that required to approximately counterbalance the reciprocating parts, and accords with common practice.

VARIATIONS OF RAIL PRESSURE DUE TO VERTICAL OSCILLATION OF DRIVERS.

In 1886 the roads leading from New York city to Chicago were competing in speed, and there was much discussion about the possibility of making the run in eighteen hours. One road wishing to do this wanted an eight-wheel type of engine that would not weigh more than 12,500 pounds per wheel, and this did not permit the necessary boiler capacity. The writer, in developing plans for an eight-wheel locomotive to do the work, and discussing the effect on the track, held that the maximum pressure on a rail was due to two independent loads—one the static load of the locomotive, and the other the impressed load due to the centrifugal force of the counterbalances when the locomotive is travelling at high speed. It was then brought out that the impressed load was frequently, on the road in question, nearly three times the static load of the locomotives in use, so that a locomotive weighing 20,000 pounds per wheel would not cause so great a maximum wheel load as some of the engines in use, provided the wheels of the heavier locomotive were made large in diameter and the weight of the reciprocating parts reduced. At that time, in further developing the comparison of wheel loads, the complication of the problem, when considered theoretically, was found to be such that a solution seemed well-nigh impossible. The elements of the problem indicated that the maximum and minimum rail pressures do not occur when the counterbalance is down or up, as might at first be supposed, but instead these occur either before or after the counterbalance has reached the upper or lower positions, according to the conditions of the action of the engine at the time. The analysis made at that time was based on the assumption that the whole driving wheel and all its attachments could be taken as a revolving body rotating on a centre not coincident with its centre of gravity; also that for all practical purposes the angular velocity could be considered uniform, as the wheel has much stored energy and is revolved by the track even when the forces tending to produce revolution are small, and thus the stored energy of the whole train is available to keep the rotation

Digitized by Google

of the driver uniform up to the point where the resistance of the driver to rotation (due to the inertia resulting from the oval path of the centre of gravity) is equal to the adhesion of the driver to the rail. Further, it was then believed that the friction of the axle box in the frame jaws was so small relating to the other forces acting, that its effect on the character of the rotation might be omitted in a practical analysis. Even with this simplification the analysis seemed too complicated for solution with reasonable accuracy.

In 1888 Prof. Gaetano Lanza, after a brief consideration of the specific problem presented to him by the writer, gave the opinion that the maximum and minimum rail pressures did not occur at the upper and lower positions of the counterbalance.

On several occasions the technical papers have asked in their columns for a solution of the problem, but the first useful information was gathered in 1891 by the late Prof. Arthur T. Woods, member of this Society, who made an experiment with a model under assumed conditions, the results of which showed that under those conditions the maximum and minimum rail pressures did not take place when the counterbalance was directly up or down. These results were given first in the *Technograph*, 1891, and afterwards in the *Railroad Gazette*, August 14, 1891, p. 560.

Last year Prof. W. F. M. Goss, of Purdue University, Indiana, kindly consented to determine from his test locomotive some fundamental facts about the revolution of a locomotive driver, and he devised the plan of putting an iron wire between the driver and the carrying wheels to learn where the driver left the rail and where the pressure was greatest. The results showed that the maximum lift and maximum pressure did not occur when the counterbalance was directly up or down, and, further, that succeeding revolutions did not give duplicate results. This last Professor Goss attributed to the fact that the engine rolled sidewise on the driving springs and so varied the pressure on the rail.

This year Mr. R. A. Parke, of New York city, becoming interested in the problem, made a mathematical analysis of the character of the revolution of a driving wheel, and presented the result in a paper before the New York Railroad Club, which was published in the *Proceedings* in February, 1894, and afterwards given quite fully in the *Railroad Gazette*, February 23, 1894, p. 136. Mr. Parke's conclusion was, that the character of

Digitized by Google

the rotation was such that the maximum and minimum rail pressures occurred when the counterbalance was directly above or below. Later Mr. Parke found that his analysis did not take into account all of the conditions, and being occupied with other important work was unable to proceed further with the theoretical investigation.

During the early part of the present year some practical work, on which the writer was engaged, demanded the completion of the investigation, and it was thought best to call for expert assistance in the mathematical work, and Prof. J. Burkitt Webb, a member of this Society, kindly consented to undertake the solution, and his results were received in September. The problem, as presented to Professor Webb, was as follows:

Angular velocity, constant.

Driving wheel held from horizontal oscillation, and can only move around the centre of motion, which centre is the driving box, the driving box being held by the spring of the rail below and the driving spring above; and the driving box can oscillate vertically between the guides that are held, for all practical purposes of this problem, rigid in a longitudinal direction.

The mass of the driving wheel is considered as concentrated at its centre of gravity, which centre of gravity does not coincide with the centre of motion.

Professor Webb's analysis is given in the Appendix to this paper. In general his conclusion is that the exact general solution of the problem is more complicated and less practical than the method of approximation which he has offered. Also, that the path of the centre of gravity of the wheel, which is, of course, the thing sought, is not an ellipse with a vertical axis, neither is it an ellipse at all, but a combination path having no regular geometrical figure; and the maximum lift of the wheel and the maximum pressure on the track may not take place at the same points in two successive revolutions. Further, in applying the method of approximation, it is necessary to take some motion, as a basis to start from, in which the angular velocity is the same as in the specific case, and following the body around in its revolution with mathematical calculation until succeeding revolutions repeat, or nearly repeat, in character; but it must not be expected that the motion will repeat indefinitely.

A simple expression of the formula for the approximate path is as follows:

Digitized by Google

The distance of the centre of the axle box above or below the normal position, when the wheel is at rest, for any angle of revolution a from the top quarter, is:

$$S = -P + \frac{r\,O^2}{U^2 - O^2} \cos.\ a + b \cos.\ \frac{U}{O}(a - B).$$

The velocity of the wheel in its vertical path at any angle of revolution a from the top quarter is:

$$V = -\frac{r\,O^3}{U^2 - O^2} \sin.\ a - U b \sin.\ \frac{U}{O}(a - B).$$

In these equations the origin is taken, for simplicity's sake, at the top quarter; that is, when the crank is 270 degrees from the front dead point.

S is the distance of the centre of the wheel above the position which it has when the locomotive is at rest.

V is the vertical velocity of the centre of the wheel in the frame jaws.

$p = \frac{I - N}{N} d$, in which N is the stiffness of the driving spring and the spring of the rail combined, divided by the stiffness of the driving spring. The stiffness is the resistance per foot of deflection.

r is the distance in feet between the centre of the wheel and the centre of gravity of the wheel.

O is the angular velocity of the wheel or the velocity in feet of a point at the end of a one-foot radius.

U is the square root of the "specific strength" of the driving spring, or of the driving spring and the spring of the rail taken together, according to whether the wheel is on the rail or off, the equation having different values of constants for the two conditions. The "specific strength" of a spring is the resistance per foot of deflection divided by the mass of oscillating parts; it is the stiffness of the spring per unit of mass of the oscillating parts.

a is the angle of revolution in degrees from the top quarter, which is 270 degrees of revolution from the front dead point.

b is a constant that depends on the conditions.

B is an angle in degrees that is constant for each one of the different equations.

To apply these equations it is only necessary to assume the driving wheel to be in any definite place vertically for any position of

Digitized by Google

the crank and to have any vertical velocity either up or down. It is evident that as the wheels bound along over the track they have an infinite variety of positions in the frame jaws, and their positions have no regularity. So that any reasonable values within the limits of the machinery can be given to S, a, and V, and the vertical oscillations may be studied without getting outside of practical cases. Perhaps the simplest thing to do is to take the value of S and V as zero, and a as 90 degrees, and then go forward with the work by substituting these values in the equations and solving for b and B. This is simple algebraical work. Then substitute b and B, and let a increase indefinitely, and note the changes of S.

This formula does not take into account the effect of the friction of the axle boxes in the jaws of the frame on the shape of the path, as the friction is itself an irregular variable, and would have made the solution more complicated than is practically necessary. The effect of friction is to alter the shape of the path, and the extent of the alteration is dependent upon the amount of the work done on the body by the friction during a revolution, in comparison with the forces acting to produce rotation and the stored energy of the body. The following shows approximately the work done by friction and the stored energy in the practical example now being considered:

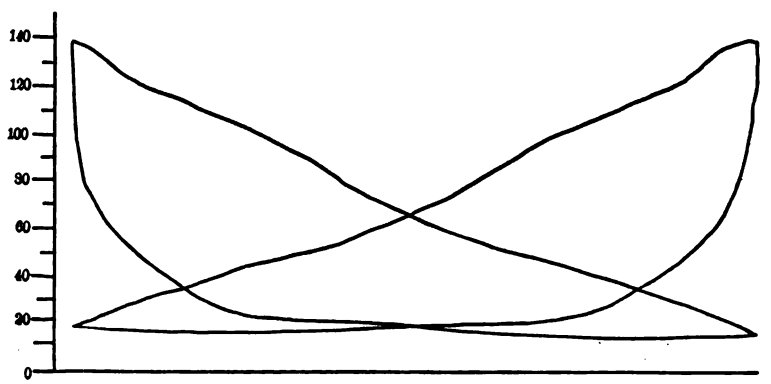

FIG. 88.—Indicator cards for specific example.

Fig. 88 shows typical indicator cards from a locomotive at 70 miles an hour, modified to allow for an increase of speed to 90 miles, which is the condition of the assumed case. This is, of

Digitized by Google

course, an approximation, but will answer for the purpose of indicating a probable effect of friction on the shape of the path of revolution of the centre of gravity of the driving wheel.

Fig. 89 shows the effective steam pressure on the pistons, allowing for back pressure and the pressure on the axle boxes against the jaws of the frame, against which they slide vertically, allowing for the obliquity of the connecting rods. The polar curves around the centre of the axle show the variations of the pressure on the axle box against the jaws caused by the steam pressure on the piston. The dotted curves show the effect of using small drivers; the pressure is decreased during the first quarter and increased just after the rear dead point. The

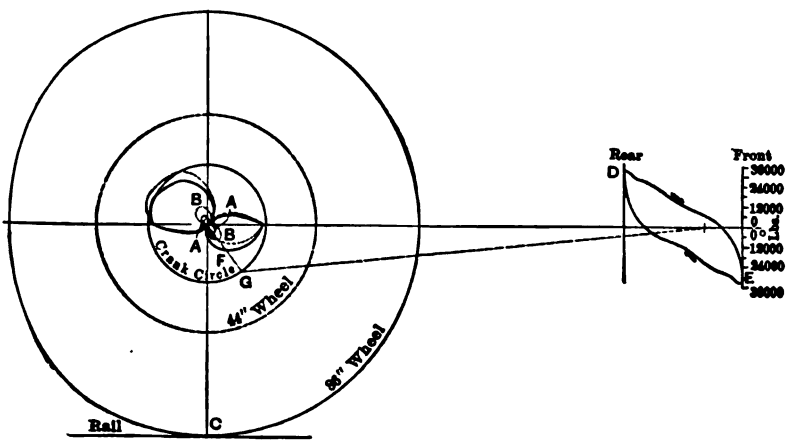

FIG. 89.—Axle-box pressures due to steam pressure on piston.

smaller the driver for a given length of crank, the greater is the variation of this pressure. The small curves, *A* and *B*, show the relative amounts of the pressure of the piston that goes to the contact of the rail and the wheel at *C* and to the axle box. The fact that more of the force of the piston pressure goes to the rail in the case of the small driver, as is shown by the dotted curve *B* being larger than *A*, is not important, but only shows what is well known; namely, that for the same piston pressure, a locomotive will pull more with a small wheel than with a large one, provided, of course, that the adhesion is sufficient to prevent slipping. The direction of the axle box pressure is readily understood from the curves of steam pressures given on the right of this figure at *DE*. The pressures above the horizontal line

Digitized by Google

are to the right, and pressures below are to the left. The right hand side of the engine only is shown in this figure. The amount of pressure at any point of revolution is the length of the radial line drawn from the centre to the polar curve as at F for the point of revolution G. The method of dividing the piston pressures into two parts, namely, that going to the axle box, and that going to the rail, is indicated on Fig. 86.

Fig. 87 shows the pressure of the axle box on the frame jaws that is due to the inertia of the reciprocating parts. The lines AB and CD are the curves showing the inertia of the piston at different points of the stroke, allowance being made for the obliquity of the connecting rod. The straight dotted lines indicate the inertia when no allowance is made for the length of the rod and assuming pure harmonic motion of the piston. The large polar curves, E and F, show the pressure that goes to the axle box, and the small curve, G and H, shows the pressure that goes to the rail contact. The dotted polar curves show the pressures for small driving wheels.

The method of laying out these polar curves graphically is as follows:

The line of the connecting rod, as $P\,Q$, is extended to meet the vertical line at R, and a horizontal line, $R\,S$, is drawn as shown. The force PT is laid off horizontally at U and V, and lines are drawn from U to W and from V to the centre. The distances $R\,S$ and $R\,X$ represent the pressures on the axle box and rail contact respectively. The forces are then laid off on the line of the crank as at Y. This graphical method was used in describing the polar curves on Fig. 89.

Besides the axle box pressures due to the steam pressure and the inertia of the reciprocating parts, there is that due to the "excess balance" that is used for the reciprocating parts. This is determined from Fig. 86, in which the curves A and B are the polar curves giving the horizontal component of the centrifugal force of the "excess balance," such as $O\,Y$ for any point of revolution G. The centrifugal force of the strictly revolving parts and their balances practically balance each other, and need not be considered in determining the friction of the axle box in the guides.

Taking the friction between the axle boxes and the jaws as one per cent., these parts being well oiled and the boxes free to move, Fig. 90 shows the total axle-box pressure at different points of the

Digitized by Google

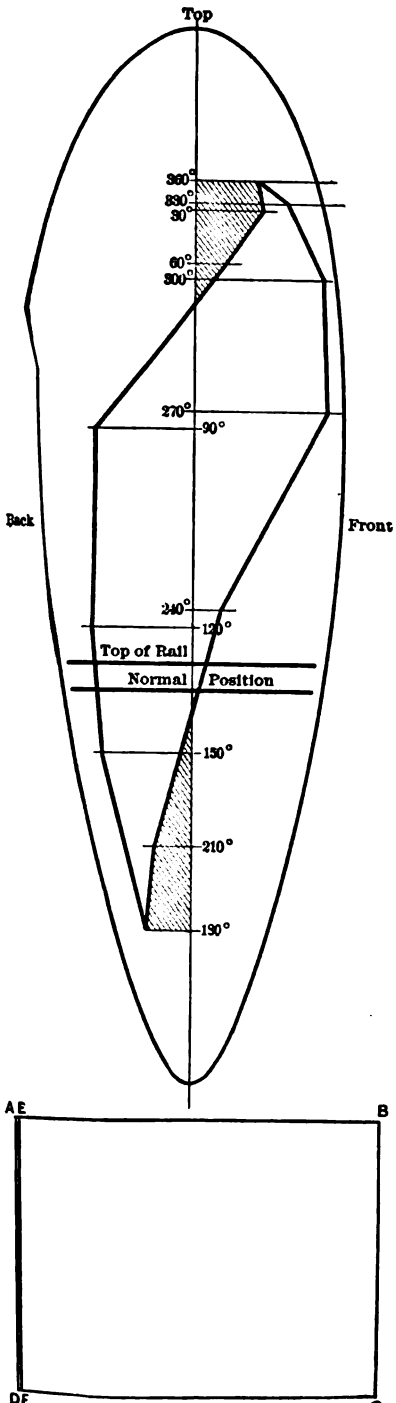

FIG. 90.—Axle-box pressures for back driver, and the effect of friction on the shape of the path of the centre of gravity.

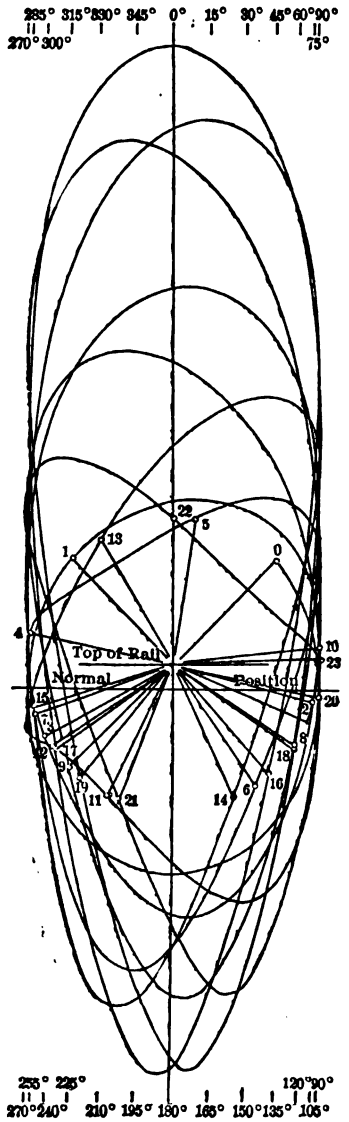

FIG. 91.—Path of centre of gravity around centre of motion during succeeding revolutions.

Digitized by Google

revolution and at different parts of the vertical path of the axle-box in the frame jaws. The vertical path is taken as corresponding with a typical oscillation determined by the calculations which give Fig. 91, except that to simplify matters the axis of the typical path of the centre of gravity is taken as vertical instead of inclined. The degrees of revolution are marked on the diagram, and the horizontal distances to the right and to the left indicate the resultant of the several axle-box pressures determined from Figs. 89, 86, and 87. The shaded sections show where the area of the curves overlap, and the sectioned parts are to be taken twice in finding the work done per revolution in overcoming the friction of the axle box in the jaws. The rectangle $A\,B\,C\,D$ is proportional to the stored energy in the wheel due to its maximum vertical velocity in the frame jaws, and the rectangle $A\,E\,F\,D$ is proportional to twice the work done in overcoming the friction during a full vertical oscillation up and back.

The effect of the friction on the shape of the path of the centre of gravity must be small, as these rectangles indicate. The irregularities in the track affect the shape of the path so much that the friction may be neglected.

The extension of Professor Webb's analysis of the special case is given in Fig. 92 from A to B. The labor required to make the calculations is so stupendous that the extension was discontinued at B. The work involves very close calculations of the junction angles and no inconsiderable amount of labor in determining the values of b and B in the equations. It must be remembered that for every change in condition of revolution, that is, whenever the wheel leaves the rail or returns to it, a new equation must be used, and to determine the values of the constants in each new equation, the junction angles and velocities have to be accurately calculated. The labor in this work was much reduced by tabu-

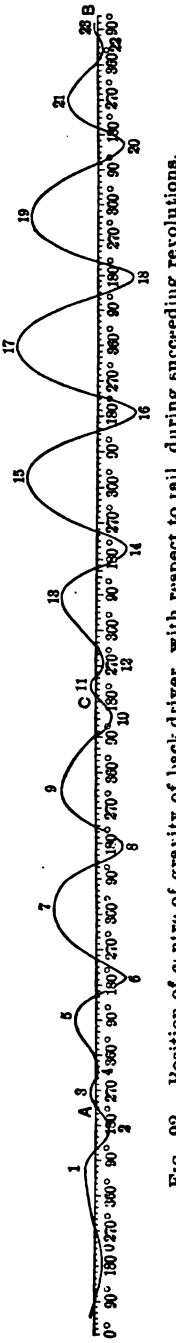

FIG. 92.—Position of centre of gravity of back driver, with respect to rail, during succeeding revolutions.

Digitized by Google

lating the values of the repeating factors in the equations, and by having printed forms of the typical equations and of the elementary processes of solving the equation for the new constants.

The similarity of the repetitions at *A*, *C*, *B* indicate that there is a tendency to repeat the path after a number of revolutions, but it has been impossible to carry the work far enough to determine this, and it would not be of any practical value to do so, for the reason that all that need be sought for in this line of investigation has been gained; viz., it has been found that the maximum lift of the drivers does not commonly occur when the counterbalance is directly up, neither does the maximum rail pressure occur when the counterbalance is directly down. These maximums may take place either before or after the upper and lower points, according to the conditions under which the wheel is revolving at the instant. Slight changes in the elasticity of the track will throw the maximum point to one side or the other of the vertical line, and as there is, theoretically, no reason why the maximum lift or depression should occur on the vertical line, it may be taken as a fact that such will not be the case even as an average of all the multitude of maximum lifts and depressions occurring in practice.

That the path of the centre of gravity around the centre of revolution is not an ellipse with a vertical axis, but is, instead, a compound path with its long axis generally inclined, is shown by Fig. 91, whereon have been plotted all of the paths calculated up to this time for this special case. It is noticeable that succeeding paths do not duplicate each other, and the reason for this is to be found, not in the oscillation of the engines, but in the nature of the conditions under which the revolution of the wheel takes place, even supposing the engine to be rigidly fixed and prevented from all longitudinal and vertical movement.

Friction not having been considered in the calculations for these curves, it may be expected that in actual practice the modification due to the friction of the axle boxes, sliding vertically in the jaws, would be appreciable, but not enough to alter the useful conclusions which can be drawn from the results of calculations made without including friction. The small relative ratio of the work done by friction per revolution to the stored energy in the oscillating body in the direction of the path of oscillation is shown in Fig. 90.

Digitized by Google

The numbers on Fig. 91 show the points where the equations change. From 0 to 1 the wheel is on the rail, from 1 to 2 it is off the rail, and from 2 to 3 it is on again, and so on; commencing with each even number the wheel is on the rail until the next odd number is reached, and from each odd number the wheel is off the rail until the next even number is reached. Figs. 93 and 94 show typical succeeding oscillations for which the

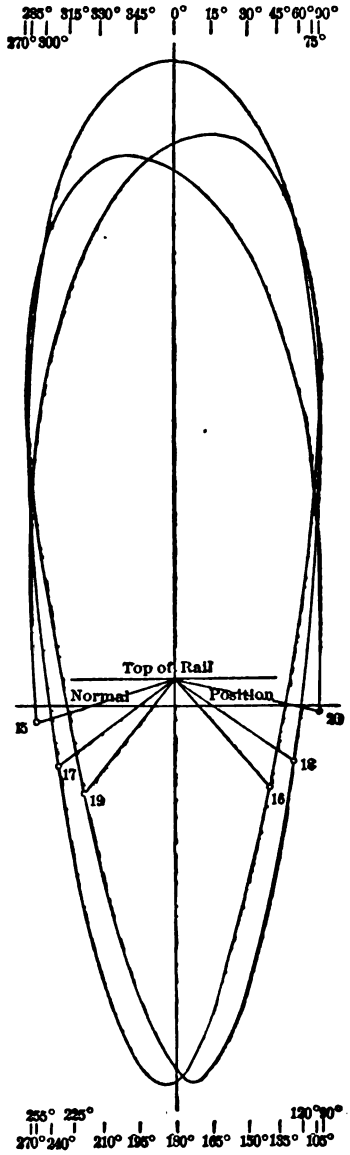

FIG. 93.—Example of succeeding revolutions. For data, see Table A.

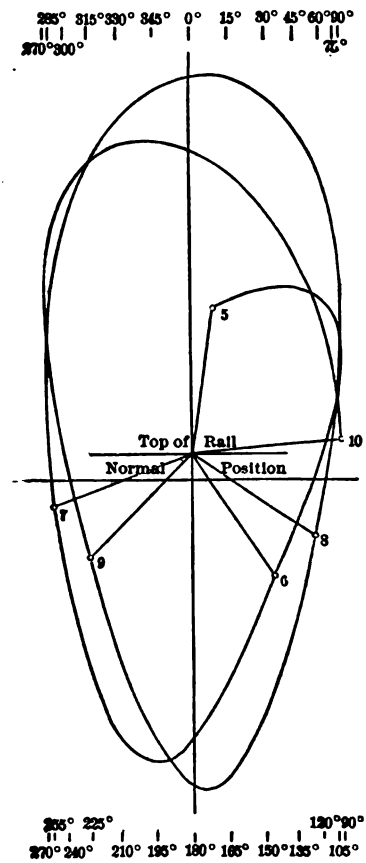

FIG. 94.—Example of succeeding revolutions. For data, see Table A.

Digitized by Google

TABLE A.—DATA FOR FIGS. 93 AND 94.

PATH.	VALUES OF					Initial junction angle.	Initial velocity. Feet per second.
	$-P$	$\frac{rO^2}{U^2 - O^2}$	b	$\frac{l'}{v}$	$-B$		
	Feet.				Degrees.	Degrees.	
5-6	.209	.167	.398	.632	23.77	8.00	+2.40
6-7	0	.025	.072	2.24	119.85	145.65	−5.43
7-8	.209	.167	.551	.632	363.92	250.00	+6.28
8-9	0	.025	.687	2.24	93.73	124.18	−7.19
9-10	.209	.167	.505	.632	347.72	225.12	+6.96
15-16	.209	.167	.664	.632	370.62	252.72	+8.88
16-17	0	.025	.185	2.24	106.12	139.21	−11.00
17-18	.209	.167	.716	.632	359.25	232.95	+11.22
18-19	0	.025	.133	2.24	91.02	124.90	−11.07
19-20	.209	.167	.648	.632	347.65	218.90	+10.79

Table A gives the results in detail, and those who care to study the reasons why succeeding paths do not duplicate each other will find in this table the necessary information for mathematical discussion of the reasons. There is not room in this paper, which is intended to show the practical bearing of such facts as have been collected, for a mathematical discussion of the elements of the succeeding paths.

The maximum amplitude of the oscillations given in Figs. 91 and 92 is very great, and is more than is reasonable to expect in actual practice. This result of the mathematical analysis was disappointing at first, but now it is seen that it was assumed that the elasticity of the track is practically indefinite, while in fact it is limited to a small range of motion, which is much less than is shown on the diagrams. The elasticity taken was that determined by Delano and Howard, as before mentioned, and applies only to a very short range, certainly not more than $\frac{1}{100}$ of a foot. The depression of the track, therefore, that is given on Figs. 91 and 92 is false in dimension but true in type, and the same may be said of the maximum lift. There is no way of calculating the average lift of a driver from the track, however comprehensive the mathematics, for the reason that the elasticity of the track on the ties, between the ties, and at the joints is different. Further, the relation of the vertical oscillation to the degrees of revolution is quite flexible and not direct, so that slight variations in the flexibility of the track may pro-

Digitized by Google

duce wide variations in the relative positions of the wheel vertically and the crank in the crank circle.

No doubt, if the mathematical analysis of the vertical oscillation of two engines, at the same speed and with the same assumed rail elasticity, shows that one has more lift than the other, then there will be under equal conditions in service more lift with one engine than with the other. In this way the equations have a practical value, that is, in comparing engines.

EFFECT OF COUNTERBALANCING ON TIRE WEAR.

The effect of the "excess balance" on tire wear must be considerable when the revolutions per minute are as great as they are with large drivers at very high speeds and small drivers at moderate speeds. The relative forces with large and small drivers are perhaps best shown by Fig. 71. It has been shown both mathematically and by the results of the practical experiments at Purdue, that with drivers of ordinary diameter the tires are off the track for a considerable portion of a revolution at 60 miles an hour, when the "excess balance" is about the ordinary amount. Omitting the wear of brake shoes, which ordinarily do not wear the tire where it bears upon the rail, it is evident that if the average locomotive should be continuously run at 70 miles an hour there would be one point on the tires, except the main tire, that would never touch the rail and would therefore never be worn. The main wheels do not lift as much as the back wheels, that is when running ahead, for the reason that the obliquity of the main rods causes a downward pressure on the track, which counteracts somewhat the lifting tendency.

In looking for the causes of flat spots on driving tires of fast-moving locomotives, the first point of importance is to find the part of the revolution where there is the least wear. This point will generally be found following the crank, that is at a point where the tire touches the rail when the crank has passed the 90-degree point or lower quarter, the engine running ahead, that being the place where the driving wheel will probably most frequently have the maximum lift. An examination of worn tires of high-speed locomotives shows this to be the case. There are causes of tire wear other than the abrasion due to rolling contact, the principal cause being the slipping of the tires in starting up a heavy train. The "imperceptible slip" which has

Digitized by Google

been said to exist has never been proved to take place after the engine has reached an ordinary speed, say of 10 miles an hour, but it occurs sometimes at slow speeds when the engineer is quite expert in handling the throttle. It can be seen when a heavy train is being started and the locomotive is moving at less than 5 miles an hour. It is due to the non-uniformity of the moment of rotation produced by the steam pressure on the pistons. The maximum moment when the slipping occurs is slightly greater than the adhesion of the drivers, and for a few degrees of revolution the drivers slip slightly. However, locomotives are not generally run in this way, for the reason that when the balance between the moment of rotation and the moment of adhesion is so delicate, the change in the coefficient of friction, caused by a slippery place on the rail, permits the engine to slip violently. For various reasons, engineers are required to avoid this. Instructions are generally given to slip the drivers as little as possible. The writer made experiments in 1891 on a heavy grade 17 miles long, of about 117 feet per mile, on the Baltimore & Ohio Railroad (see *Railroad Gazette*, November 27, 1891, page 832), to determine whether, under the extreme conditions of hauling a heavy load, there was any slip after starting. The results showed that the drivers made the same number of revolutions when going up the hill with a heavy train as when coming down without load.

Tires wear both by pulverization of the steel due to rolling contact and by abrasion, and, as the points of maximum wear of each kind do not always coincide, it is difficult to predict where the most worn places will occur, unless all the conditions of speed and service are accurately known. The maximum rail pressures occur with greater uniformity for back drivers than for main drivers, for the reason that the vertical component of the piston pressure due to the angularity of the connecting rod varies with different cut-offs and modifies greatly the points of maximum rail pressures. It is only in cases where locomotives are run quite uniformly in speed and piston pressure that it is of any practical use to examine the relation of the positions of points of maximum rail pressure and the points of maximum wear.

Digitized by Google

CONCLUSIONS.

(*a*) The present method of counterbalancing locomotives by providing in each driver a balance sufficient to fully counterbalance all the revolving parts, and an additional balance, known as the "excess balance," which has a centrifugal force equal to about two-thirds of the maximum inertia of the reciprocating parts, is practically perfect so far as the locomotive itself is concerned.

(*b*) The "excess balance" now often used for the reciprocating parts is too great for speeds above sixty-five miles an hour, with drivers less than six feet in diameter, as the track is liable to be damaged by the excessive rail pressure which it causes.

(*c*) The only practical way in which the "excess balance" can be reduced is by reducing the weight of the reciprocating parts, and as these parts are generally made heavier than the service demands it is possible to reduce the "excess balance" to a point where the rail pressures will not be destructive, provided that the diameter of the drivers be made suitable for the speed.

(*d*) The larger the driver for the same speed and weight of reciprocating parts, the less will be the maximum rail pressure caused by the "excess balance."

(*e*) The heavier the locomotive, the greater is the amount in pounds of the reciprocating parts that can remain unbalanced without causing the locomotive to shake, in "nosing" and "plunging" more than can be permitted. It is not the *percentage* of the total weight of the reciprocating parts that should be considered in selecting the "excess balance"; it is the actual weight in pounds that can remain unbalanced without shaking the engine too much. If one-third of the weight of reciprocating parts weighing 600 pounds can remain unbalanced, then, if those parts be reduced to weigh but 400 pounds, one-half can remain unbalanced, and "excess balance" will be needed for but 200 pounds instead of 400 pounds of reciprocating weight.

(*f*) The maximum rail pressure of a driving wheel is not at all indicated by the static load of the wheel on the rail. The impressed load due to the "excess balance" is often double the static load, and the pressure at the point of impact when the wheel lifts from the rail and drops is even greater. There appears to be no way of determining what the impact pressure is,

Digitized by Google

but the impressed load due to the "excess balance" can be calculated by the formula for centrifugal force. About all that is known about the impact pressure is that it is enough at times to bend a seventy-pound rail downward vertically one inch in cases where the engine has small wheels and is run too fast, or has the rods taken off and is run at moderately high speeds, or has improper counterbalances.

(*g*) The speed at which any given driver will begin to lift from the rail is probably less than that at which the centrifugal force of the counterbalance equals the pressure of the wheel upon the rail, as at speeds lower than that the wheel has small vertical oscillations that may carry it off the rail. But the lift will not be important until the speed has increased to a point where the centrifugal force of the "excess balance" is somewhat greater than the pressure of the wheel on the rail.

(*h*) The exact height of lift of a wheel in any given case is dependent upon so many unknown and variable quantities in practice, such as the flexibility of the track and the rhythm with which points of equal flexibility succeed each other in the direction in which the locomotive is running, that it is impossible to predict what it will be. But it is sufficient to know that for the good of the track, and to prevent broken and bent rails, and for the safety of a train following a locomotive, it is not prudent to run a driving wheel at a speed where the centrifugal force of the "excess balance" exceeds the pressure of the wheel upon the rail.

(*i*) All driving wheels for fast locomotives should be as large in diameter as it is possible to make them and not decrease the power too much in starting trains.

(*k*) The path of the centre of gravity of a wheel, with respect to the engine during a revolution, is an oval figure with the long axis more nearly vertical than horizontal, the inclination of the axis varying constantly, owing to the difference in the elasticity of the track at different points, and to other causes.

(*l*) The heavier the driving wheel and the parts under the driving springs, and the stiffer the driving springs, the less will be the lift from the rail, all other conditions being equal.

Digitized by Google

APPENDIX.

ANALYSIS OF PATH OF CENTRE OF GRAVITY OF DRIVING WHEEL.*

Simplification of the Problem.—The *axis of the driver* is to remain horizontal and perpendicular to the track; *i. e.*, *fixed in direction.*

The motion of any body with a thus fixed axis can be no more than a *translation* plus a *rotation* about its axis. In this case the *translation* must be a *vertical* one.

A body so moving may be replaced at will by any other body having the *same mass*, the same *centre of gravity*, and the *same radius of gyration*, without in any way affecting the motion.

The *driver* may, therefore, be supposed to be simply a right line with two equal masses at the ends of it, whose sum equals the mass of the driver. and whose distance apart equals twice the radius of gyration. The centre of gravity of the driver will be the middle point of the line, and its centre a point at the proper distance therefrom, Fig. 95.

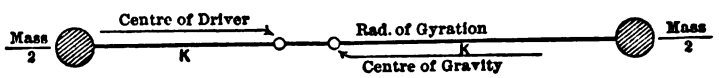

FIG. 95.

Each of the half-masses is supposed to be concentrated in a sphere (say) of differential radius, so that it will have no moment of inertia about its own centre. If it were necessary to make a model of the thing, so that we could not suppose differential spheres, the half-masses could be discs of suitable size pivoted by their centres, so that they would not rotate when the whole arrangement revolved around a point in the line. This conception is illustrated in Fig. 96, where vertical lines on the half-masses are shown remaining vertical in spite of the revolution

* This analysis was prepared for the writer by Prof. J. Burkitt Webb, member of this Society.

Digitized by Google

about the centre of gravity (or any other point in the line or out of it).

The *journal boxes* (all non-revolving parts) at the centre of the driver may be added to the driver as concentrated masses, like those in Fig. 95. We thus obtain Fig. 97 as our simplified conception of the driver plus its journal boxes.

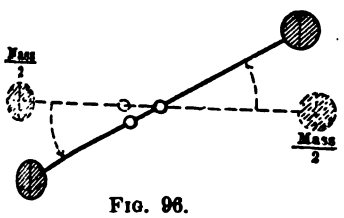

FIG. 96.

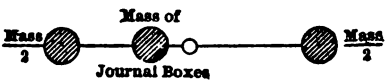

FIG. 97.

We now calculate a *new centre of gravity* and a new *mass* and *radius of gyration*.

The *new mass* = mass of driver + mass of journal boxes.

The *new centre of gravity* will be at a distance from the centre of wheel

$$= \text{old distance} \times \frac{\text{old mass}}{\text{new mass}}.$$

The *new radius of gyration* will be measured from the new centre of gravity and will be equal to the

$$\sqrt{\frac{\text{new moment of inertia}}{\text{new mass}}},$$

and the new moment of inertia will be equal to the old moment + journal box mass × (old distance to centre of gravity)^2 − new mass × (old distance − new distance)^2.

Simplified driver and boxes.—We thus reduce Fig. 97 to Fig. 98.

In the same way, half of the parallel bar should be considered as a mass concentrated at the centre of the crank pin, and the whole, driving wheel, journal boxes, and half bar, reduced to the form shown in Fig. 98. As the crank pin will not be on the line through the centre and centre of gravity, the line connecting the final half-masses will be at an angle with the line connecting the original half-masses. This process will be illustrated.

The *angular velocity* will be affected by the oscillations to so small an extent that the neglect of this effect, already assumed,

Digitized by Google

is justifiable. We must, however, adapt our physical construction thereto. In order to reduce this effect to nothing, we must

FIG. 98.

assume a driver such that an infinite amount of energy will be stored in it; such a driver will not vary its rotation by the addition of finite amounts of energy. This will be accomplished by simply removing our new half-masses to infinity, so that while the centre of the wheel and its centre of gravity and mass remain unchanged, its radius of gyration and moment of inertia will be increased to infinity, and, therefore, its contained energy for a finite angular velocity will be infinite, see Fig. 99. The same result will be attained by supposing ever so small a finite fraction of the mass at infinity, and the rest, practically all of it, at the centre of gravity, so that our wheel boxes and parallel bar reduce

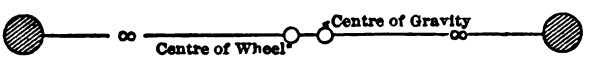

FIG. 99.

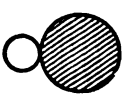

FIG. 100.

to a simple mass at the centre of gravity, Fig. 100. This is equivalent to saying that *we have only the translation of combined masses to consider.* The angular velocity being constant, there will be no need of considering the mass concentrated in a differential sphere; it may equally well be any mass whose centre of gravity is at the centre of gravity of the combined masses.

Simple Spring.—In place of the driving spring and the rail we may substitute one spring acting on the centre of the wheel, and to imitate lifting clear of the rail we may put a stop so that the stiffness of the spring may change at a certain point in the oscillation. Fig. 101 shows this. The spring is supposed long enough to allow the motion of the centre of wheel to be vertical. When the spring touches the stop, it will change its stiffness and change back when the centre rises to the same height.

FIG. 101.

Specific Strength.—Inasmuch as an increase in the stiffness or

Digitized by Google

strength of the spring and a proportionate increase in the mass will not affect the motion, we may divide the stiffness of the springs by the mass and call the result the *specific strength* or stiffness per unit mass.

Mathematical Statement of the Problem. (See Fig. 102.)

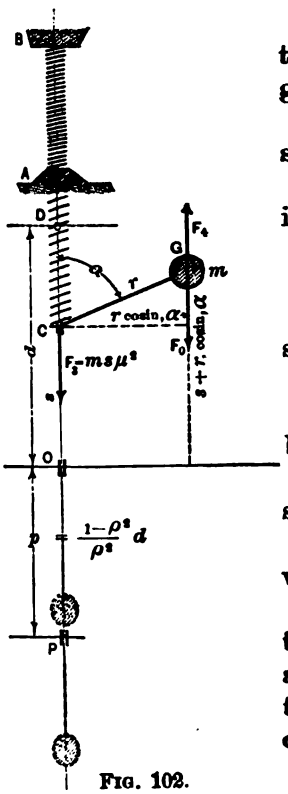

Fig. 102.

m = total oscillating masses.

r = distance in feet from C, the centre of the driver, to G, the centre of gravity of total oscillating masses.

OC, the vertical axis on which C slides.

O, the position of C when the mass m is at rest, as indicated dotted.

S = distance above O of C.

$S + r$ cosin. α distance above O of m.

α = angle of r from the vertical, as shown.

$\alpha = \theta t$ = angular velocity × time.

μ^2 = specific strength of the spring below A.

$\rho^2\mu^2$ = specific strength of the whole spring below B.

P, the position of C for mass at rest when stop at A is removed.

D, the position of C when pitch of the whole spring becomes the same, and above which the stop is inoperative, the spring acting as a whole from B to centre of wheel, C.

Fig. 103 shows the problem in its most elementary form, with the action of the springs represented by the force F, at C.

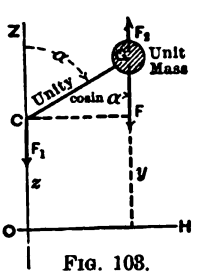

Fig. 103.

The radius CG is here marked "unity," i. e., one times r, and all other distances are expressed by so many times r. In other words, r is assumed as the unit for measuring all *distances*.

The mass is also marked "Unit mass," which means that the mass is reduced to unity and the forces reduced in the same proportion.

Digitized by Google

It will, however, be best to write one fundamental equation for Fig. 102 and then show that it reduces to a simple form corresponding with Fig. 103.

In order to make use of the fundamental equation of dynamics, viz.,

$$\text{mass} \times \text{acceleration} = \text{accelerating force},$$

we must have a force acting directly upon the mass. Now, in Fig. 102 the spring acts on the end C of the radius and not directly on the mass. To remedy this, we introduce at G two equal and opposite forces of the same amount as that of the spring and parallel thereto. Then F_1 and F_1 constitute a moment whose effect is to vary the angular velocity, which variation is, however, neglectable by reason of the assumed infinitely great moment of inertia of the wheel.

We have now the force F_0 acting directly on the mass, and this leads to the equation:

$$m \frac{d^2 (s + r \text{ cosin. } \alpha)}{dt^2} = F_0 = -ms\mu^2.$$

In Fig. 102 s is drawn as a plus quantity, and m and μ^2 are also plus; but the effect of the spring in the position drawn is to urge the mass downward, or, in other words, F_0 is negative, and therefore the minus sign must be put before $ms\mu^2$. On the left-hand side of the equation, m and dt^2 are plus, and so although $s + r$ cosin. α is plus, its second differential must be minus.

To put the equation in a simpler form, we divide through by m and μ^2, and differentiate $s + r$ cosin. α twice, remembering that $\mu^2 dt^2$ is the same as $[d(\mu t)]^2$, and that $\alpha = \theta t$. This gives, putting $\mu t = \tau$, and $\theta = n\mu$ and $\frac{s}{r} = z$,

$$\frac{d^2 z}{d\tau^2} + z = n^2 \text{ cosin. } n\tau. \quad \ldots\ldots\ldots \quad (1)$$

The above reductions have not been made arbitrarily. In every problem there are units which are the units used by nature in the problem; the ordinary units, pound, foot, second, etc., being entirely artificial. Thus, the only fixed length in the problem being r, all other lengths should be put in terms of r. The only fixed velocity in the problem being that of an oscillation of the

Digitized by Google

mass under the action of the spring alone, all velocity should be expressed in terms thereof; therefore, we put $\theta = \eta\mu$. To realize μ as an angular velocity, suppose a unit mass, Fig. 104, to be mounted on a face-plate so that it is free to move without friction, in or out, along a radius, the axis of the face-plate being vertical to avoid influence of gravity. Suppose it to be governed by a spring of strength μ^2, as shown; and that when the face-plate is standing the spring holds the mass at the centre. Run the face-plate now with the proper velocity, and the mass may be placed at any distance from the centre and be in equilibrium, the centrifugal force exactly balancing the centrifugal force of the spring. For simplicity, put it at unit's distance from the centre (one foot); then we shall have:

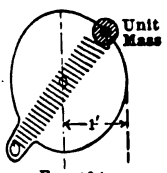

Fig. 104.

$$\text{centripetal force of spring} = \mu^2$$
$$= \text{centrifugal force of mass} = \mu^2,$$

the radius and mass disappearing from the formula for centrifugal force, because they are both unity.

In other words, the specific strength of a spring which will hold a mass against centrifugal force at all distances from the centre is the square of the angular velocity, or the square root of the specific strength is the angular velocity.

To connect this angular velocity with the oscillation of a mass in a right line, we have only to remark, that, when the face-plate is standing, if the mass be caused to oscillate in its diametral path under the action of the spring, the time of oscillation will be the same as the time of revolution $= \frac{2\pi}{\mu}$. (See Rankine's *Applied Mechanics*.)

The significance of τ is now evident, it being the angle described in any time, t, by the angular velocity μ. Time is simply the angle passed over by a radius of the earth, or by the hands of a clock, as we please to consider it. In fact, it is the angular distance marked by a meridianal plane of the earth; that is to say, by the plane of a transit instrument set in the meridian upon a spherical dial of the heavens; the degrees, minutes, and seconds being marked on the latter, in a somewhat irregular manner, by the so-called fixed stars. The *Nautical Almanac*

Digitized by Google

enables the observer, however, to put his observations at once into degrees (or hours), minutes, and seconds. Now, τ is the angle which Nature marks off in this problem for her own use therein.

The integral of this equation is

$$z = \frac{n^2}{1 - n^2} \text{ cosin. } n\tau + a \text{ cosin. } (\tau - \tau_o). \quad . \quad . \quad . \quad (2)$$

Interpretation of the Equation.—This value of z consists of two terms, each of which represents a harmonic motion.

The first member represents a forced harmonic motion, or a harmonic motion whose period is forced to agree with that of the rotation of the wheel. The second member represents a free vibration, or a harmonic motion taking its own time, that is, the time in which the spring naturally oscillates the mass.

We may also say that the first oscillation is one whose period is forced, in which case it will choose its own amplitude, and the second oscillation is one in which the amplitude is forced, in which case it must be left free to choose its own period.

In the first case the period is governed by $n\tau$, and in the second case by τ; therefore the forced period is $\frac{1}{n}$ of the free period. Further, in the first case the $\frac{\text{amplitude}}{r}$ is $\frac{n^2}{1 - n^2}$, a definite function of the period, while in the second case the $\frac{\text{amplitude}}{r}$ is a, an arbitrary quantity or constant of integration, which may have any value to suit the particular circumstances of the problem.

The remaining, or other, constant of integration (the equation (1) being of the second order necessitates two constants of integration in the general integral) is τ_o, and this also depends on the particular circumstances of the problem. τ_o regulates the *phase* of the free oscillation with respect to that of the forced one.

Discussion of the Equation.—*a.* The amplitude of the free vibration must depend upon some force, or disturbance, of the regular forced vibration, just as it would depend upon

Digitized by Google

an external force or disturbance were there no forced vibration. But whatever value might thus be given to a, it would gradually be decreased by friction and other resistances, and the second term would thus disappear from the equation, leaving only the forced vibration. It is true that this problem does not call for the introduction of friction, and we are not considering friction directly, but only the right of the second member to exist in the equation. On the supposition of no friction, the second term once in must remain in and a retain its constant and original value. But so long as CO is less than DO, the data of the problem include no cause for a disturbance of the forced oscillation, and a must be placed equal to O. To produce such a disturbance as would be required to make the second term necessary, the wheel would have to be put in motion in a way discordant with the regular forced vibration, or a blow would have to be struck the wheel. In any actual case, as before said, frictional and other resistances would absorb the energy of such a disturbance, or blow, and leave a pure forced vibration. But when OC exceeds OD, the change in the strength of the spring creates such a disturbance at each revolution, so that (in spite even of friction) the second term is needed to represent the motion. The value of a will in general, however, change at each revolution. We shall show later how the value of a may be found in a particular case.

τ_0 This quantity depends on the same considerations as a. When $a = 0$ it is indeterminate, and when the second term is needed τ_0 is found in the same calculation as gives a.

n is the number of times faster that the forced oscillation goes than the natural time. $n = \frac{\theta}{\mu}$, so that the amplitude, supposing the spring permanently attached at A, is

$$\frac{n^2}{1-n^2} = \frac{\theta^2}{\mu^2 - \theta^2}.$$

This quantity is zero when $\theta = 0$, and infinity when $\theta = \mu$; i.e., when $n = 0$ and when $n = 1$. For intermediate values it is plus. When n increases past 1, this $\frac{\text{amplitude}}{r}$ goes through infinity and becomes negative; as n increases farther, the amplitude goes on increasing; *i. e.*, it now decreases numerically until, when $n = \infty$, it $= -1$. Smaller negative values are impossible.

Digitized by Google

To make the various values assumed by this $\frac{\text{amplitude}}{r}$ more intelligible, let us assume certain values for n and construct diagrams of the motion on the supposition that no such stop as is shown at A, Fig. 102, interferes with the harmonic motion, and that $a = 0$. Or, rather, we suppose that the spring is permanently attached at A, so that no change of strength is possible.

In Fig. 105 we have C stationary because the wheel has zero angular velocity. In Figs. 106 and 107 the wheel takes longer to revolve than the natural time of oscillation, and, in order that this may be the case, it will be noticed that the spring stretches less than it would were it attached directly to the mass; and this diminished stretching reduces the spring force just enough to let it oscillate the mass in the slower time.

When the velocity of the wheel gets up to the natural speed for the spring, the spring cannot control the mass in the proper time without stretching the same distance as the mass moves, see Fig. 108. Nature gets over this difficulty by making the amplitude infinite, in which case the constant amount (namely, the radius), by which the extreme stretch of the spring, or semi-amplitude of the point C, falls short of the semi-amplitude of the mass, disappears with respect to the infinite semi-amplitude.

Fig. 109 is for a velocity greater than that natural to the spring. Here the spring has to stretch farther than the mass goes, and thus make up for its lack of strength suited to the increased velocity. In other words, as the thing passes through the infinite stage it turns over, so that the elliptical path of the mass is described in the reverse direction, although the rotation of the wheel, indicated by the arrow, continues in the same direction.

When n^2 is ∞, the mass simply oscillates in a horizontal line and makes the spring follow the other end of the radius, without giving it time enough, in upper or lower positions, to disturb the horizontal motion of the mass, see Fig. 110.

It would be impossible, of course, to show all these changes in a model, because there would be a limit to the distance a spring could stretch, and, therefore, the reversed condition could not be arrived at by passing through infinity. The reversed condition can, however, be introduced in other ways.

Distribution of Energy.—Suppose we examine Fig. 107 to see how the energy varies for different positions of the mass. OQ is the maximum stretch of the spring. Calling the radius unity $OQ = 3$,

Digitized by Google

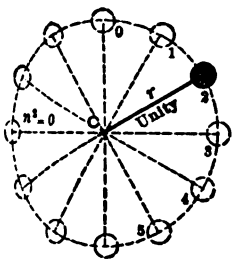

FIG. 105.

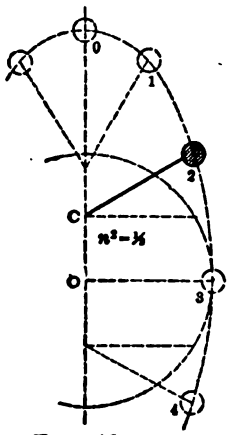

FIG. 106.

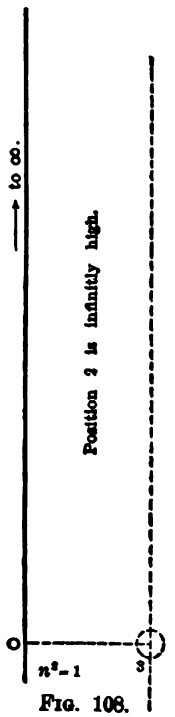

FIG. 108.

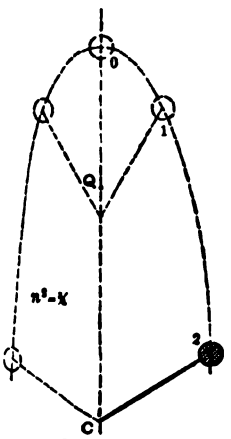

FIG. 107.

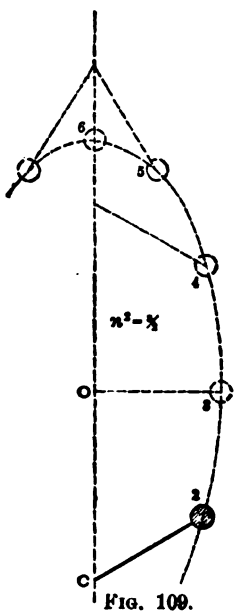

FIG. 109.

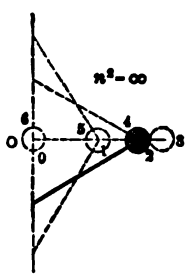

FIG. 110.

and the strength of the spring being μ^2, it will exert a pull at Q of $3\mu^2$ on the unit of mass. Its average tension is, therefore, $\frac{3}{2}\mu^2$. Multiplying this by the space over which it stretches, we get $\frac{9}{2}\mu^2$ for the work done by the spring as it contracts from Q to O.

In its zero position (highest position) the mass is 4 distant

Digitized by Google

from O, and it has, at this point, no vertical velocity. The force F_o, Fig. 102, equal to that of the spring acting on the mass over the space 4, with a regularly decreasing value, produces a vertical velocity which, in the position 3, is equal to the velocity in the circumference with radius 4 and angular velocity $\theta = n\mu\sqrt{\frac{3}{4}\mu}$. The energy due to this velocity is $\frac{1}{2}(4\theta)^2$ for a unit of mass $6\mu^2$, and the energy due to the force F_o, which has the average value $\frac{3}{2}\mu^2$, is $6\mu^2$, the same amount, as it should be.

What needs now to be explained is the fact that, though the contracting spring furnishes but $\frac{9}{2}\mu^2$ work, the mass receives $\frac{12}{2}\mu^2$, a difference of $\frac{3}{2}\mu^2$ to be furnished from some other source.

We will now find, Fig. 102, the work of the moment F_3F_4 between 0 and 3 positions. As s is, in Fig. 107 (or when α in equation (2) = 0) proportional to the cosine, the force $F_3 = 3\ \mu^2$ cosin. α, and the lever arm = sin. α (radius being unity), therefore the moment = 3 μ^2 sin. cosin. α. Multiplying this by $d\alpha$, we get

$$d\ (\text{work}) = 3\ \mu^2 \text{ sin. cosin. } \alpha d\alpha$$

$$\text{work} = \frac{3}{2}\mu^2 \text{ between limit } \alpha = 90^\circ \text{ and zero degrees.}$$

Inasmuch as this moment retards the rotation of the wheel, it causes it to give this much work out (from its infinite store of energy, so that no perceptible change in angular velocity results) to assist the spring in accelerating the mass.

This is just as it should be, because, were the point C pivoted fast, the wheel would supply all the energy to produce the downward velocity at the position 3. In this case, however, the downward velocity would be but $\frac{1}{4}$ of what it is in Fig. 107, and the energy therefore but $\frac{1}{16}$, and the wheel would be receiving at all times as much energy from the diminishing horizontal velocity as it gives out to the increasing vertical velocity, so that no change of its energy would result. In Fig. 107, however, while it receives from the diminishing horizontal velocity the same amount as it would with a fixed C, it gives out a much (four times) larger amount to help produce the vertical velocity.

Digitized by Google

It may be well to state here that the energy received by the wheel as the horizontal velocity diminishes is given to it by a couple of horizontal forces, similar to the couple F_1F_4. One of these forces is applied at C by the guide which forces C to move in a vertical path. The other is one of two equal and opposite forces introduced at G, the remaining one of the pair, corresponds to F_4, and produces the horizontal acceleration.

If no friction exists between C and the guides, the reaction of the latter on C has no effect further on the problem, and this is the case in the present problem. It may not be amiss to remark, however, that in a case where friction did exist to an appreciable extent, this reaction would introduce a force which would combine with F_4 and modify the equations for the vertical motion, having the general effect of skewing the elliptical paths to one side.

The general equations for a combination path may be written thus:

Lower sections: $s = \frac{r\theta^2}{\mu^2 - \theta^2}$ cosine $\alpha + b$ cosine $\frac{\mu}{\theta}(\alpha - \beta)$.

Upper sections: $s = -p + \frac{r\theta^2}{\rho^2\mu^2 - \theta^2}$ cos. $\alpha + b$ cos. $\frac{\rho\mu}{\theta}(\alpha - \beta)$.

Lower sections: $V = -\frac{r\theta^2}{\mu^2 - \theta^2}$ sine $\alpha - \mu b$ sine $\frac{\mu}{\theta}(\alpha - \beta)$.

Upper sections: $V = -\frac{r\theta^2}{\rho^2\mu^2 - \theta^2}$ sine $\alpha - \rho\mu b$ sine $\frac{\rho\mu}{\theta}(\alpha - \beta)$.

In order to find the definite equations for the succeeding sections, we must substitute the vertical (or only) ordinate of C and its velocity in the respective general equations and solve for the unknown constants b and β.

The process can be continued indefinitely, inasmuch as, in general, there will be an infinite number of sections in the combination path.

Fig. 111 shows the 0, 1st and 2d sections; the scale, however, is too small to give room to enter all the values of s without their interfering with one another.

It is possible that in some particular cases the combination path may repeat itself after a certain number of sections, es-

Digitized by Google

pecially if friction exists between the boxes and their vertical guides, but this is beyond the limits of the present investigation.

We might also proceed to obtain a single expression covering all the successive parts of the combination path; but it does

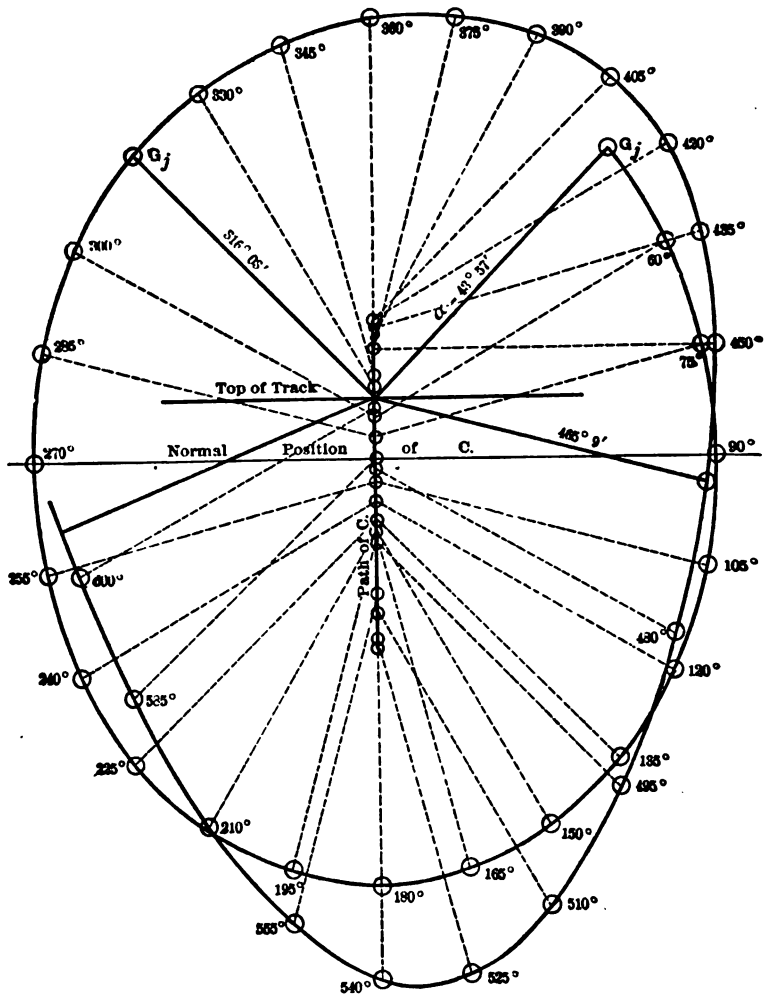

FIG. 111.

not seem that such an expression, though necessary in the investigation of the properties of the combination path considered as a whole (such as the possible property of repeating itself in certain cases) would render the calculation of an actual

Digitized by Google

path any easier than by the process already illustrated in the path which has been calculated.

In the path calculated the question of sufficient motion for the driving box, or rather sufficient room for it to move without striking above, has not been considered. It must be obvious, however, that any such limitation of its freedom of motion must prevent it from describing a path having a greater vertical dimension that this circumstance would allow.

Should it be desirable to test the accordance of the principles above developed with the curve automatically described by an apparatus, or model, imitating the action of a locomotive driver, such a model could readily be constructed, but certain precautions would have to be taken to make it work in accordance with the theory, and not exactly as an actual locomotive would act. Thus: the centre of the driver must move vertically *without* friction, and there must be a device for starting it under definite conditions (that is, with definite values of b and β). In a real case, also, the spring of the track must vary as the wheel passes over the ties, and more than that the driving spring will not, in case the body of the locomotive oscillates vertically, act with the same strength as it does when tested with the locomotive at rest.

Friction changes the phase of harmonic motion and may leave amplitude unaffected.

Sometimes a slight error in these produces a large one subsequently. If the curves *appear* to settle down to a regular path, do not conclude at once that they do so, for more than likely they quiet down a little in that way and then go wild again. Without friction I should hardly expect to hit a case giving a regular or a repeating path. (By "regular" I mean every turn the same, and by "repeating" that after a certain number of turns the same set of curves appears again—like a repeating decimal as distinguished from an ordinary one.)

Gravity simply changes the whole curve and brings it nearer the earth by the same amount as it affects the position of rest, or normal or neutral position.

Friction delays the phase, is a rough statement. That is to say, if the law between the other forces and the friction is simple enough the curve remains harmonic but changes its phase, while with a more complicated law it will modify the curve more or less as well. No matter what curve the friction gives, it can be expressed as a combination of harmonic curves, but to be prac-

Digitized by Google

tical you would endeavor to approximate the effect of friction by means of an expression that would complicate the shape as little as possible, leaving it thus in better shape for practical calculations. If the power supplied is used up by the friction, there is a chance of getting a regular path.

NOTE.—This paper received discussion jointly with that of Prof. W. F. M. Goss on "An Experimental Study of the Effect of the Counterbalance in Locomotive Drive-wheels upon the Pressure between Wheel and Rail," and the debate on the two papers will be found at the close of the latter (No. 625) in Vol. XVI., *Transactions*, p. 305.

Digitized by Google

DCXXV.*

AN EXPERIMENTAL STUDY OF THE EFFECT OF THE COUNTERBALANCE IN LOCOMOTIVE DRIVE-WHEELS UPON THE PRESSURE BETWEEN WHEEL AND RAIL.

BY W. F. M. GOSS, LAFAYETTE, IND.
(Member of the Society.)

In the mechanism of a locomotive, the revolving parts at the crank-pins, together with the reciprocating parts connected therewith, are balanced more or less completely by the addition of masses, or "counterweights," to the drivers. But since the counterweights move in circular paths, it is only the horizontal component of the radial force derived from them which can serve to neutralize the effect of the reciprocating parts; the vertical component of all that portion of the force which applies to the reciprocating parts, is unbalanced. This unbalanced vertical component causes the pressure of the driver on the rail to vary with every revolution. Whenever the speed is high, it is of considerable magnitude, and its change in direction is so rapid that the resulting effect upon the rail is not inappropriately called a "hammer blow." Many practical demonstrations have been had of the magnitude of the forces involved. Heavy rails have been kinked, and bridges have been shaken to their fall, all under the action of heavily balanced drivers revolving at high speeds. The evidence is sufficient, but the means by which the evil is to be overcome has not yet been made clear. Indeed, the difficulties to be met in counterbalancing have been greatly increased during the last decade by the demand for heavier and still heavier engines, and for higher speeds in all classes of service. Heavier engines require heavier reciprocating parts, and heavier reciprocating parts demand more counterbalance. With a view to keeping the number of revolutions down,

*Presented at the New York meeting (December, 1894) of the American Society of Mechanical Engineers, and forming part of Volume XVI. of the *Transactions*.

Digitized by Google

wheel diameters have been somewhat increased; but the expected gain has not been realized, because an increase of speed has followed. As a result of these developments, the modern engine may have reciprocating parts on each side weighing from 600 to 1,000 pounds; these must be given a horizontal balance (more or less complete) by counterweights in the wheels, and the wheels are often driven at a rate exceeding 300 revolutions a minute.

It is not the purpose of this paper, however, to discuss the question of counterbalancing, but rather to show some of the effects of such balancing. The forces which are brought into action by the presence of the counterbalance have been elaborately studied; * and their precise effect upon the pressure of contact between wheel and rail has of late been the subject of considerable discussion. To throw some light upon this most practical and important question, a series of experiments was undertaken at the engineering laboratory of Purdue University, the essential feature of which was the passing of a soft iron wire of small diameter under the moving wheel. It was expected that the varying thickness of the wire which had been subjected to this process, would show the effect of variation in pressure between the wheel and the track. If the wheel should leave the track entirely, a portion of the wire would retain its full diameter; and the real purpose of the experiments, as originally planned, was to demonstrate whether, at any speed easily attained, the driver would actually rise from the track. Brief accounts of these experiments have already been published, and the interest which has been shown in them has prompted this more complete statement of the conditions involved, and the results obtained.

The apparatus employed consisted chiefly of the Purdue locomotive "Schenectady," which, as is generally known, is mounted with its drivers resting upon wheels of approximately the same diameter with the drivers. When the drivers are

* "An Account of Certain Experiments on Several Methods of Counterbalancing the Action of Reciprocating Parts of a Locomotive," Gaetano Lanza, *Proceedings A. S. M. E.*, Vol. X., p. 302. "General Solution of Transmission of Force in a Steam Engine, as Influenced by the Action of Friction, Acceleration, and Gravity," D. S. Jacobus, *Proceedings A. S. M. E.*, Vol. XI., p. 492. "The Irregular Wear of Locomotive Driving Wheel Tires," E. M. Herr, *Proceedings Western Railway Club*, May, 1892. "The Vertical Influence of the Counterbalance," R. A. Parke, M.E., *Proceedings of the New York Railway Club*, February 15, 1894.

Digitized by Google

turned by the engine, the supporting wheels roll in contact with them, the engine as a whole remaining stationary.*

To guide the wire which was to be fed under the driver, a length of §-inch gas-pipe was secured to the laboratory floor in

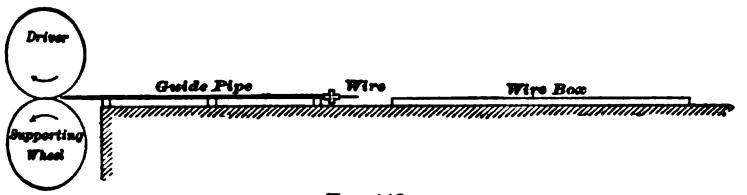

FIG. 112.

front of each driver included in the experiment (Fig. 112). Three pipes were thus arranged. A deflector plate was fixed behind the main driver, to turn the wire delivered from this wheel away from the rear driver; but, with this exception, no attempt was made to control the course of the wire after it left the wheel. The wire was of common annealed iron of about 0.037 of an inch in diameter. It was prepared by being carefully straightened and cut into lengths of twenty feet; that is, about 3.5 feet longer than the circumference of the drivers, and two inches longer than the guide pipe in which the lengths were to be fed to the wheels. Wires thus prepared were laid in light wooden troughs to preserve them from injury, and a trough thus supplied was placed in line with each guide pipe (Fig. 112). In conducting the experiments, an operator at each pipe drew a wire from the trough and passed

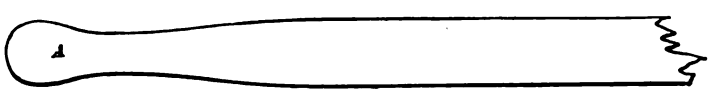

FIG. 113.—[*Twice actual size.*]

it into the pipe until only about two inches of the length remained outside. From the relative length of guide tube and wire, it was known that the opposite end of the latter was now close to the driver. When desired conditions of speed had been secured and a signal given, a touch of the operator's finger upon the end of the wire was sufficient to start the opposite end under the wheel. The starting of the wire was accomplished without commotion. The man in charge was conscious only of

* For description of this plant, see "An Experimental Locomotive," *Proceedings of the American Society of Mechanical Engineers*, Vol. XIII., p. 427.

Digitized by Google

having touched it. To an observer who watched for the wire as it came from the driver, it gave the impression of a quivering beam of light, which an instant later became a loosely tangled thread of metal. Or, if one kept his eye upon the wall of the laboratory against which the wire was allowed to impinge, he saw the whole tangled coil appear instantaneously and without apparent cause. The initial end of each wire was, in plan, of the outline shown by Fig. 113, from which it would appear that when the wire came under the influence of the wheel's motion, the tensional stress upon sections near the end, as at A, exceeded the elastic limit of the material, this stress being required to impart motion to the mass of wire to the right of A. The weight of the twenty-foot length was about one ounce, and the time occupied in its passage was usually a fifth of a second. These facts will help to show the significance of the speeds used in the experiments.

The speed of the locomotive was noted from a registering counter, and also by a Boyer speed recorder, a permanent record being obtained from the latter instrument. To assist in connecting the effect produced on the wire with definite phases of the wheel's motion, a nick was made with a sharp chisel across the face of each driver, in line with the counterweight, as at A (Fig. 114). An impression of this nick was sharply defined upon every wire that passed under it. The initial end of the wire could, as has been already stated, be determined by an examination; but to leave no doubt as to this matter, and for the purpose of giving a second reference point, one of the wheels was marked with two parallel lines ninety degrees from the first reference line, as at C (Fig. 114).

It was found by a comparison of reference marks, that distances along the length of the wires could be taken as representing equal distances around the face of the wheel. Thus, the length of each wire being greater than the circumference of the wheel, it would sometimes happen that a single wire would receive two impressions from the same reference mark; the distance between the two points thus impressed upon the wire was found to be equal to the circumference of the wheel. This fact made it easy to connect effects left upon a wire with the wheel positions (crank-angles) producing them.

Many of the wires which have been produced by the experiment described, have since been carefully calipered at five-inch intervals, the results plotted, and a smooth curve drawn through

Digitized by Google

the points thus located. Some of the results thus obtained are presented as Figs. 115, 116, and 117, the points representing the actual thickness of the wires being designated by means of small circles. It will be seen that all diagrams are plotted with reference to definite wheel positions.

THE BALANCE OF THE LOCOMOTIVE.

Before attempting a discussion of results in detail, it is necessary to consider somewhat briefly the condition of balance of the locomotive experimented upon. The engine as delivered by its builders was balanced for the road; but to increase its steadiness in the laboratory, equal weights were afterward added to the several wheels, until a *full horizontal balance* had been secured.* The revolving and reciprocating parts which required counterbalancing, exclusive of the crank-pins and crank-pin bosses, which are assumed to be parts of the wheels themselves, were found to weigh as follows:

Piston and piston rod	297.0 lbs.
Cross-head with part of indicator rigging attached	170 5 lbs.
Main rod	344.5 lbs.
Side rod	278.0 lbs.
Total for one side	1,090.0 lbs.

For complete horizontal balance, it was required that the sum of the weights making up the counterbalance of the two wheels on the side of the engine under consideration, should be equivalent to 1,090.0 pounds acting at a radius of one foot. To ascertain the distribution of balance between the wheels, it was necessary to examine them separately. Calculations based upon prints of the wheel centres gave the following results:

	Main Wheel.	*Rear Wheel.*
Balance cast in rim, and between the arms, plus the weights added at the laboratory, all reduced to equivalent weights acting at a radius of 12 in..	744.1	725.7
Weight of crank-pin and crank-pin hub to be subtracted	187.1	179.1
Net weight available to balance revolving and reciprocating parts acting upon the crank-pins....	557.0	546.6

The net weight thus obtained for both wheels (1103.6 pounds) is 13.6 pounds greater than the weight of the parts to be bal-

* On January 23 of the present year, the plant from which the results herein described were obtained was destroyed by fire. The new plant, now in operation, does not require the locomotive to be in complete horizontal balance.

Digitized by Google

anced. But the engine is known to have been in perfect horizontal balance, the experimental methods adopted in securing this condition serving to indicate when the weights were changed even to the extent of a single pound. The calculated weight in each wheel is therefore assumed to be $\frac{13.6}{2} = 6.8$ pounds heavier than the weights themselves, and this amount has been subtracted as a correction from the net weight given above, making the

	Main Wheel.	*Rear Wheel.*
Corrected net weight of counterbalance available to balance revolving and reciprocating parts acting upon the crank-pins	550.2	539.8

The weight of the parts involved, together with certain dimensions, are summarized in Fig. 114.

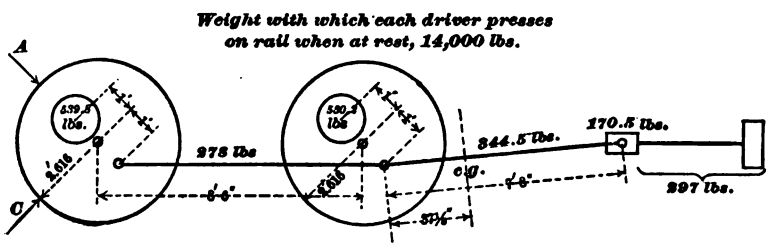

FIG. 114.

Taking the weight of side rod and of main rod as already given, and considering 0.6 of the weight of the latter as a revolving part,

	Main Wheel.	*Rear Wheel.*
The excess of balance over that required for revolving parts alone is	204.5	400.8

which shows 66 per cent. of the balance for reciprocating parts to be in the rear wheel.

Six different rules for balancing locomotives for the road, reported as being in common use, give weight of counterbalance for the locomotive in question, as follows :

	Main Driver.	*Rear Driver.*
Rule A (for freight engines only)	467	260
" B (for all classes of service)	462	322
" C " " " " "	547	340
" D " " " " "	570	340
" E " " " " "	573	366
" F " " " " "	588	381
Average of five rules from B to F inclusive	548	350

Digitized by Google

Compared with these several standards, the weight of the counterbalances in the Purdue engine stand as follows:

	Main Wheel.	*Rear Wheel.*
By Rule A (for freight service only),	17.8% too heavy,	107.6% too heavy.
" " B (for all classes of service),	19.1% " "	67.6% " "
" " C " " " " "	0.6% " "	56.9% " "
" " D " " " " "	3.5% too light,	56 9% " "
" " E " " " " "	4.0% " "	47.5% " "
" " F " " " " "	6.4% " "	41.6% " "
By the average of five rules from B to F inclusive.	0.4% too heavy,	54.2% " "

It is evident, therefore, that the weight of the counterbalance in the rear wheel, from which most of the results about to be discussed were obtained, is in excess of that allowed by good practice as expressed by the rules already given. But practice cannot always conform to the law by which it assumes to be governed. It often happens where wheels are of small diameter, and the connections are heavy, as in Mogul or Consolidation engines, that there is not sufficient room in the main wheel to get in a counterbalance large enough for the revolving parts alone; in this case, therefore, the balance for reciprocating parts of this wheel must be taken by the other coupled wheels, in addition to that which, under the rules, would be counted as properly belonging to them. By this process, wheels having revolving parts which are relatively light are employed to balance a larger per cent. of all the reciprocating parts. Again, almost any eight-wheeled engine, balanced in an approved manner, will, if the coupling rod is removed, have an excess of balance in the rear wheel equal to that for the engine under consideration; and such engines are not infrequently run while disconnected.

These considerations will serve to show that while the total weight of the counterbalances of the Purdue engine is, for reasons already stated, heavier than would be considered necessary for the road, and while at the time of the experiments the weights were not well distributed between the wheels, yet the conditions which existed are not at all rare. Doubtless many wheels are running which carry a greater counterbalance, when compared with the revolving parts to be balanced, than did the rear wheel of the Purdue locomotive.

RESULTS.

Attention has already been directed to the fact, that in the engine experimented upon, the excess of weight in the counter-

Digitized by Google

balance over that required for the revolving parts alone, was much greater for the rear driver than for the main driver. As the lifting effect is proportional to this excess of weight, it follows, that wires run under the rear driver were likely to show more variation in thickness than those under the main driver. Results of experiments upon this point are shown by Fig. 115, which represents wires obtained at the same instant from the main driver and the rear driver, respectively. It will be seen that the wire (I.) from the main driver shows but slight

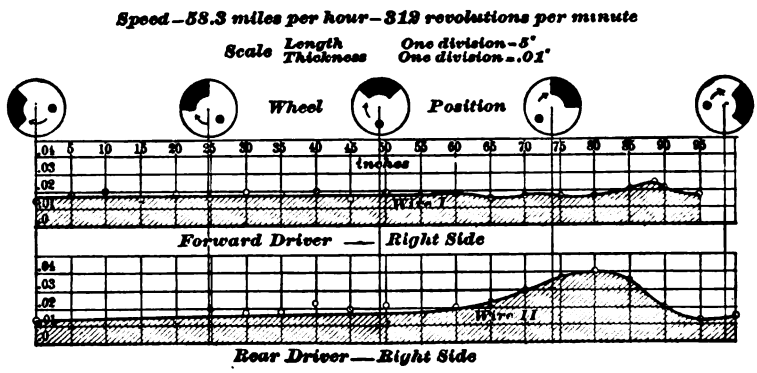

FIG. 115.

variation in thickness, notwithstanding the high speed (312 revolutions per minute), and it may be said that no wire was ever obtained from this wheel which gave evidence that the wheel had left the track. From mathematical considerations it can be shown that this wheel would not be expected to lift at speeds below 80 miles per hour (428 revolutions per minute), and such speeds are not practicable with wheels of the diameter experimented upon.

Passing now to an inspection of wire II. (Fig. 115), from the rear wheel, which was obtained at the same instant with wire I., it will be seen that there is a jump of the wheel just after the counterbalance has passed its highest point, which, when compared with the corresponding movement of the main driver, is very pronounced. Wires from this wheel at higher speeds are shown by Fig. 116. In this figure the full diameter of the wires is in each case shown by a dotted line drawn parallel with the base line. Wire III., made at 59 miles (316 revolutions), shows that there was an instant in the passage of the wire, correspond-

Digitized by Google

ing to the point *A*, when it was barely touched by the wheel. Increasing the speed to 63 miles (337 revolutions), increased the lifting action of the wheel to the extent shown by wire IV. (Fig. 116). At the point *B*, the wheel parted contact with this wire and did not again touch it until the point *C* was reached, an interval of about 40 inches, the portion of the wire between *B* and *C* being entirely round and apparently unaffected by its

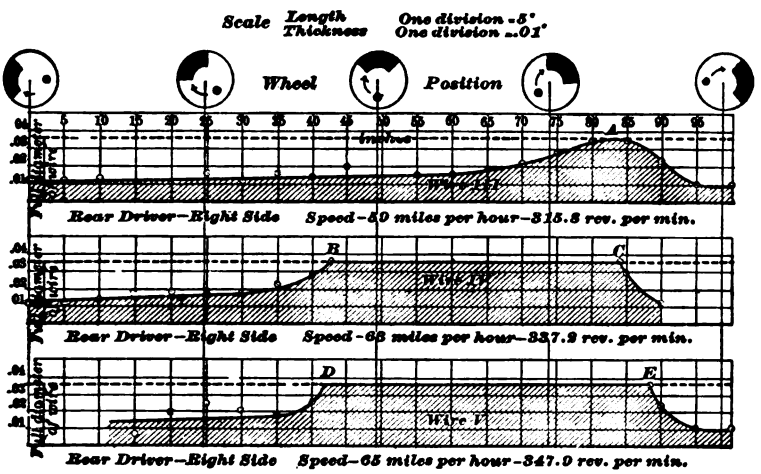

FIG. 116.

passage under the wheel. A further increase of speed gives, as is shown by wire V., a still greater length of full wire, the distance from *D* to *E* being very nearly equivalent to a quarter revolution of the driver.

It will be seen that all of these wires (II. to V., Figs. 115 and 116) substantially agree in showing the maximum lifting effect to occur after the counterbalance has passed its highest point, an effect undoubtedly due to the inertia of the mass to be moved; also in showing that the rise of the wheel from the track is more gradual than its descent. The latter condition follows as a sequence of the first.

Portions of the wires not shown on the diagrams do not vary much in thickness. The metal is rolled so thin by the normal pressure of the wheel that further increments of pressure do not greatly affect it. The wires, therefore, do not emphasize the destructive effect of the variation of wheel pressure when the change is insufficient to lift the wheel from the track.

Digitized by Google

It now remains to mention the effect of certain disturbing elements which are shown by the experiments to modify the actual movement of the wheel, other conditions remaining constant. For the rear wheel, these disturbing elements are all in the nature of vibrations.

The first to be noticed is the rocking of the engine upon its springs, which motion tends to vary the pressure of the wheel upon the track independently of the action of the counter-

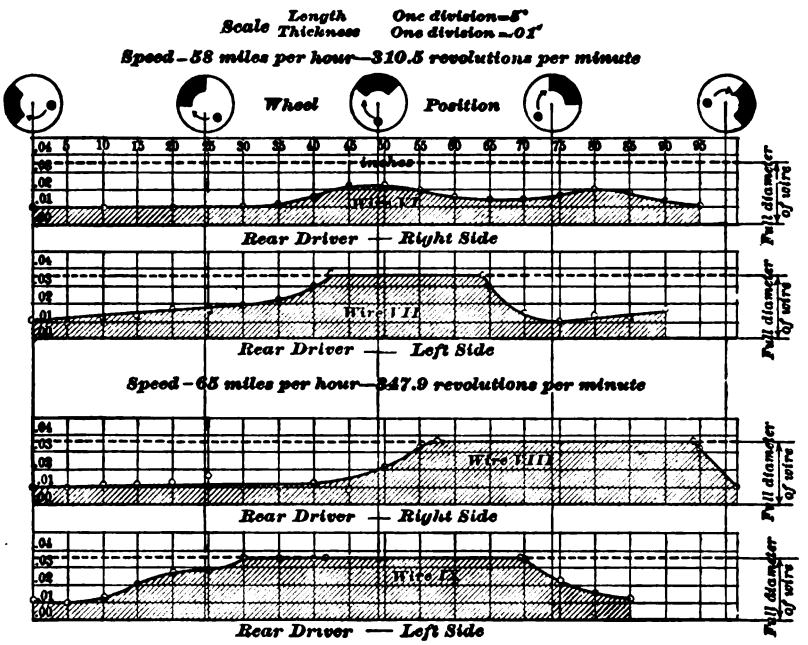

FIG. 117.

balance. At one revolution the effect of the rocking may oppose the action of the counterbalance, and at the next revolution it may supplement the action of the counterbalance in producing a vertical movement of the driver. Again, the effect of the rocking may at a given instant be *nil*, and the wheel may rise under the action of the counterbalance; but in another instant the effect of the rocking appears, and the path of the wheel while in air is modified and its time of descent changed. Thus, the existence of this vibration makes it impossible to duplicate wires with certainty, even though the speed is constant; its effect is well shown by Fig. 117. Wires VI. and VII. were taken from

Digitized by Google

the rear drivers at the same instant, one from the right side, the other from the left; the speed, therefore, must have been the same for both. The right driver lacked a good deal of leaving its wire, but the left driver was in air for a tenth of a revolution. Again, wires VIII. and IX. were made in the same way at a higher speed; and here, while both drivers were off the track, the results are reversed, the right driver giving the greater length of full wire. It will also be seen from the diagrams, that not only is the extent of the vertical movement of the driver modified by the rocking of the engine, but the position of the wheel when such motion occurs is changed. It is evident, therefore, that this movement of the engine upon its springs will prove a serious difficulty whenever an attempt is made to predict as to the precise movement of the centre of gravity of the driver, whether the method of investigation be mathematical or experimental.

There appears, also, to be a vibration of parts, as, for example, of the wheel as a whole, these vibrations being of small amplitude. Evidence of the presence of such vibration is shown by the location of points on the diagrams of wires, Figs. 115 to 117, which points represent the thickness of the wires as found by measurement. Referring especially to wires I. and II. (Fig. 115), it will be seen that the actual thickness of the wire alternately increases and diminishes with every point. The time involved in passing from one high point to another (a distance of ten inches) was about 0.01 of a second. This vibration may be traced on other diagrams; its amplitude is from two to four thousandths of an inch only. Whether the process of introducing the wire starts, or has any connection with, this vibration, the experiment does not show.

A third class of vibrations is made apparent by a duplication upon the wire of the reference mark on the wheel. As has already been stated, a light nick from a sharp chisel was made across the face of the wheel to serve as a reference mark. This nick leaves a clear-cut projection upon the wire. But at high speeds the single nick across the face of the wheel leaves two projections upon the wire, showing that after making one impression the surface of the wheel must for an instant have actually cleared the wire and then impressed itself a second time. The distance between these projections on the wires varies somewhat, but is usually about an eighth of an inch, which

Digitized by Google

represents a time interval between the two impressions of about 0.008 of a second. The contact between wheel and track is therefore not continuous, but is a succession of exceedingly rapid impacts. These vibrations cannot affect the wheel as a whole; they are doubtless due to the elasticity of the materials, and involve only the parts immediately about the point of contact.

CONCLUSIONS.

The results of the experiments appear to justify the following conclusions:

(1) Wheels balanced according to usual rules (which require all revolving parts, and from 40 per cent. to 80 per cent. of all reciprocating parts, to be balanced, the counterbalance for the reciprocating parts to be distributed equally among the several wheels connected) are not likely to leave the track through the action of the counterbalance, and cannot do so unless the speed is excessive.

(2) A wheel which, when at rest, presses upon the rail with a force of 14,000 pounds, and which carries a counterbalance 400 pounds in excess of that required for its revolving parts alone, may be expected to leave the track through the action of the counterbalance whenever its speed exceeds 310 revolutions per minute.

(3) When a wheel is lifted, through the action of its counterbalance, its rise is comparatively slow and its descent rapid. The maximum lift occurs after the counterbalance has passed its highest point.

(4) The rocking of the engine on its springs may assist or oppose the action of the counterbalance in lifting the wheel. It, therefore, constitutes a serious obstacle in the way of any study of the precise movement of the wheel.

(5) The contact of the moving wheel with the track is not continuous, even for those portions of the revolution where the pressure is greatest, but is a rapid succession of impacts.

The writer is indebted to Daniel Royse, M.M.E., junior member of the Society, for assistance in the preparation of data.

Digitized by Google

DISCUSSION.*

Mr. M. N. Forney.—This paper is an extremely interesting one, and presents some matters which have been but very little understood, and which appear to be of very great importance in the operation of railroads. The fact that a locomotive driving-wheel in ordinary service actually rises entirely clear of the track at high speeds is a matter of so much importance that it certainly should receive great attention from the Society of Mechanical Engineers. There are some things in this paper, however, to which it seems to me that attention has hardly been sufficiently given. The paper indicates that the rising of the driving-wheel entirely clear of the track has only occurred in those wheels which were practically overbalanced. The forward driving-wheel never rose clear of the track. It was only in the rear driving-wheel, which had a greater excess of balance than the forward one, that this action took place. On page 310 there are some figures given which present the results of six different rules for balancing the driving-wheels of locomotives. From the figures which are there given it will be seen that in every instance the wheels of this locomotive that were experimented with had more balance than these rules indicate they should have, or were overbalanced, as it is called. Now, I presume that there are hardly any of you here who have not at some time or other been to a country circus, and seen a man get down on his hands and feet and place a big stone on his stomach, and have somebody take a sledge-hammer and break that stone to pieces, without any injury to the man whatever. The fact is, that that stone resisted the inertia of the hammer to such an extent that it did not affect the man below it or his stomach. It seems to me that a somewhat analogous condition of things exists in a locomotive. Before the wheel can rise from the rail through the effect of the counterbalance you must overcome the inertia due to the weight of the wheel and axle and driving-box and spring, and all the parts which are not resisted by the elasticity of the spring. It is only what may be called the superfluous effect of the action of the counterbalance which has any effect in raising the wheel from the track. It is for this rea-

*This discussion covers also the topics presented in Paper No. 624 of the same meeting, by Mr. David L. Barnes, entitled, "Rail Pressures of Locomotive Driving Wheels."—*Transactions of the American Society of Mechanical Engineers*, Vol. XVI., p. 249.

Digitized by Google

son that it is only when the wheel is overbalanced that this effect takes place. For that reason, as a practical question, it does not seem to me to be of so much importance as it would appear from the paper before us.

Mr. Geo. S. Morison.—I was going to ask Mr. Forney a question. He has shown us a man lying on his back with a big stone on his stomach, and another man, with a light hammer, presumably, striking very rapid blows, breaks that stone. Suppose the man, instead of taking a light hammer and striking rapid blows, had taken a heavy hammer and struck a slow blow, and broken the stone; what would have been the effect on the man under the stone?

Mr. Forney.—My reply to that would be similar to what Mr. Stephenson said about the cow on the railroad track, it would have been bad for the man.

Mr. Morison.—It seems to me that the counterbalancing of locomotive driving-wheels resembles the case which is bad for the man rather than the case which is good for the man; it corresponds to a slow blow struck with a heavy hammer, much more than it corresponds to a quick blow struck with a light hammer. When you have a driving-wheel lifted from the track by the motion of a revolving counterbalance you have simply an exaggerated form of what exists when it is not lifted from the track. The actual blow which gives notice of what is occurring, and has, in quite a number of instances, bent rails so that they had to be removed from the track, occurs only when the wheel is lifted from the track. But if you have a driving-wheel with 14,000 pounds weight upon it, counterbalanced in such a way that when running at a given speed the wheel is actually lifted from the track; and then take the same wheel with 15,000 pounds pressure on it, counterbalanced in the same way, when running at the given speed, the pressure from the wheel would vary from 1,000 pounds to 29,000 pounds, instead of being, as is assumed in most calculations for rails and bridges and other such things, a uniform pressure of 15,000 pounds. This is a variation which is of enormous importance; there is nothing from which our permanent structures, our rails, our bridges, and everything else on railroads, our ties and all, are suffering much more than from this simple cause; and there is nothing which, with the high speeds we are now running our trains on, it is more important to eliminate. That is the way it impresses me; we are having a constant vari-

Digitized by Google

ation of pressure in a position where it is of the utmost importance to secure uniform pressure, uniform wear, and every other uniform result.

Prof. J. B. Webb.—I should like to call Mr. Forney's attention, if he has not noticed it, to the remark on page 312 that at eighty miles an hour this wheel would be expected to lift, and that owing to this locomotive not being constructed so as to run at those speeds, they did not get that wheel to lift. And then I would also remark further that perhaps undue attention is attracted by the fact of the wheel lifting. When it does not actually lift from the track, it strikes a blow, not so great, but still it strikes a blow. Suppose that the dead weight depresses the track a tenth of an inch, then, without lifting from the track, there may be a vibration of almost one-fifth of an inch set up; that is, the driver may, during part of the revolution, be scarcely touching the track, which will then be straight, and during another part it may depress the track a fifth of an inch. Now, whatever does this some hundreds of times per minute strikes a blow, whether you choose to call it one or not. More than this, these vibrations are irregular, and may accumulate, so that while at one time the driver does not lift, it may at another, without any change in the speed having been made.

Mr. Geo. S. Strong.—I do not think there are very many railway managers who would consent to have an engine delivered to them which had 30,000 pounds to the wheel. I remember, several years ago, I built for the Lehigh Valley R. R. an engine, and because the engine weighed 3,000 pounds more than other engines on the road, and had 17,500 pounds to the wheel, while other engines had in the neighborhood of 17,000 pounds, they would not allow the engine to run over the road until they had strengthened some of the bridges. And then, again, a short time afterwards, we built another engine which had 90,000 pounds on six wheels, and the general superintendent would not allow the engine to run over the main division, where it was intended to run, for six months, until they had strengthened up a number of bridges, because there was 90,000 pounds on six wheels. There is no doubt in my mind that they had dozens of engines on that division all the time, which were putting as high as 30,000 pounds pressure on the rails right over the bridges. That is a question that is coming up all the time—the question of how much will you allow on a wheel? and yet, at the same

Digitized by Google

time, they have got double the load on the wheels, and do not know it.

Now, as to the question of balancing these reciprocating parts. You take the different locomotive-builders; one man will say, balance all the reciprocating parts; another will say, balance half the reciprocating parts. A few years ago I built an engine in Boston, and we balanced two-thirds of the reciprocating parts. We got the engine out and ran it on the Shore Line to break it in, and although the engine and tender weighed 100 tons when we ran it, without a train on it, up to sixty miles an hour, the engine would move so that it would jig the seat under me, showing that the unbalanced third of the reciprocating part was changing the direction of 100 tons at least 350 times a minute. We ran with the engine balanced in that way on a train for a week or so, and the superintendent sent out an expert to find out why the baggage wouldn't stay piled up in the baggage-car, and the expert came back and said it was the fault of the springs in the baggage-car. I knew what the trouble was, and so did the master-mechanic. We took the engine in and put 450 pounds of lead and antimony into the wheels, so that we balanced them fully up to the weight of the reciprocating parts. After that there was no trouble. Yet, when you got the engine up to a speed of ninety miles an hour, and put your hat-rim against the window-pane, you could feel the whole engine was trembling like a leaf with the terrific force which was disintegrating the whole machine. The bolts that held the cylinders on to the frame were sheared. The bolts that held the cylinders on to the boiler were sheared. The guides were broken loose from the cylinders. And after running the engine for three months at those high speeds, we spent nearly $1,500 in putting it in repair again, while we had run the engine on another road for six or nine months before, where we did not get up those high speeds, and did not have any repairs at all. I have not any doubt that fully one-third of the general repairs to a locomotive are due to the unbalanced parts of the engine; and I have no doubt that fully one-third of the wear and tear of the track is due to the same cause.

On the Reading road, a few years ago, they had a lot of engines with very heavy reciprocating and revolving parts. One of those engines, at a speed of about seventy miles an hour, bent three miles of track, 76-pound rails, so that they had to take the

Digitized by Google

rails out and throw them in the scrap heap until they could be straightened, and they sent them to Bethlehem to be straightened, and put them in sidings. The locomotive left the mark of the flange on the top of the rail. In some places, where the wheel came on top of the rail, the engine left the track and ran nearly a hundred yards over the ties. Only a short time ago, I saw, on the North Penn. branch, a new piece of track which had only been down three years, and I walked about three miles, and counted in that distance between thirty and forty 80-pound rails which had kinks that were distinct, some as large as two inches in the length of the rail. The rails had to be taken up.

Mr. F. W. Dean.—This matter of balancing locomotive driving-wheels and reciprocating parts, I think, is of fully as much importance as Mr. Strong has represented, and also Mr. Morison. In my own experience in riding on locomotives I have noticed a great deal of vertical vibration, which could only be accounted for, so far as I was able to account for it, by supposing that the wheels actually left the rails. The engine to which I refer developed that maximum effect at a speed of almost exactly sixty miles per hour. Below that speed it was hardly perceptible, and above it it was hardly perceptible. But the speed of sixty miles an hour was frequently maintained for a long period in relation to the length of the road, but not very long in time. There are places, of course, where a speed of sixty miles per hour, or any other speed, is maintained for a mile or two, and, of course, if it were maintained for only two miles, and had this effect on the engine, either in loosening the bolts or in general disintegration, it can still be considered of vital importance to the life of the whole plant of the system. I think it is a matter to be regretted that the mechanical departments of most of our railroads are not upon a higher plane. I make all the exceptions that everybody knows ought to be made. There are many roads which are conducted intelligently in the mechanical department. The majority of them are not. This matter, I think, is something which is growing in importance, at least, growing upon the attention of people; and it is bound sooner or later to bring about the balancing of locomotives. Mr. Strong has made studies in this subject, and, without doubt, has a design which will overcome this difficulty perfectly.

Now, to return to the class of locomotives to which I refer, in which this effect was apparent, the vertical vibration was very

Digitized by Google

unpleasant to a person upon the seat in the cab, and it was inconceivable to me that it could be produced except by the wheel actually leaving the rail. I do not know that I had ever heard at that time that anybody knew that a wheel ever did leave the rail, but Professor Goss has amply shown that it does, and it would seem that these indentations that Mr. Strong has seen on the rail are additional proof. I hope that something will be done in this matter in the future.

Prof. Gaetano Lanza.—Referring to this matter of balancing locomotives, it seems to me that the assumption most commonly made has been that we must balance the entire horizontal throw. In an ordinary locomotive it is not possible, by means of the usual counterbalance weights in the wheels, to balance both the horizontal and the vertical throw; hence, if the entire horizontal throw is balanced there will be pounding. The question arises, what compromise should be adopted between balancing the entire horizontal throw, and balancing only the vertical. I should like to ask whether any railroad man has ever tried balancing only the vertical and letting the horizontal go, and what happened. I am not recommending this, but I would like simply to know if it has ever been tried and how it succeeded, with a view of determining how much of the horizontal it is absolutely necessary or desirable to balance.

Mr. Chas. T. Porter.—With respect to the cranks themselves, and the side-rods and the crank end of the connecting-rod, the vertical stresses of these parts and of the counterweights equal in weight to these parts are equal and opposite at any speed whatever, and so there is no variation in the pressure on the rail. The piston, the cross-head, the piston-rod and the cross-head end of the connecting-rod are parts which have only a horizontal motion, and which need to be balanced. I apprehend that in the perfect locomotive some way will be found for balancing this portion of the reciprocating parts of the engine, other than by a revolving mass which has a vertical component which cannot be balanced. Then it makes no matter how heavy the cranks are, how heavy the side-rods, or how heavy the crank end of the connecting-rod is, because the counterweight, equal in weight to them, will have a stress equal and opposite to theirs in all directions. I think that absolute steadiness of motion, with uniform pressure on the rails, can be obtained only by balancing the strictly reciprocating parts in some other way than by a revolving mass.

Digitized by Google

Mr. Forney.—I would say to Mr. Porter that Mr. Strong has been engaged in designing an engine in which he hopes to accomplish that, and I have been engaged in doing the same thing, and hope to accomplish what he is aiming at.

With reference to what Mr. Morison said, I would like to illustrate my point a little further. If you will take his ideal strong man and his ideal heavy sledge, and let that man strike a blow with all his force directly on the rail, it is quite conceivable that the man might break the rail. But suppose, instead of striking directly on the rail, you were to take a pair of driving wheels on an axle, with driving boxes and eccentrics on it, and allow that man to strike on the top of the driving wheel—evidently the effect on the rail would be less than if he struck the rail directly. In the one case the blow of the sledge must overcome the entire inertia of the wheel before it affects the rail at all, when the motion of the locomotive is very rapid, and there must be sufficient time for the action of the centrifugal force to act against the inertia of the wheel and affect the rail. If you will refer to the paper, at page 311, you will see there five rules, B to F, inclusive, and in the last line of the last table you will see that the main wheel was counterbalanced 4 per cent. too heavy, and the rear wheel was counterbalanced 54 per cent. too heavy. Now if you will refer back to Fig. 115, on page 312, you will see that in the first diagram wire 1 was acted on by the forward driver or the main wheel, which was counterbalanced 4 per cent. too heavy. You can see that wheel had very little effect on the wire. If you come now to the second wire below that, it was the rear wheel which was counterbalanced 54 per cent. too heavy, you can see there that the driving wheel lifted clear of the rail. In other words, an excess of 54 per cent. of counterbalance produced this effect of raising the wheel clear of the rail, and an excess of 4 per cent. did not, so that I say it is a fair inference that the great evils presented here are due to *over* counterbalancing. Now, I am not arguing that having this disturbing effect and this tendency is a good thing—not by any means. But do not let us delude ourselves into the belief that the injurious effects are greater than they really are.

Mr. John McGeorge.—I would like to give one instance to show the effect of the vertical counterbalance. The question is, what are we to counterbalance—the horizontally moving parts or the vertically moving parts? I have in my mind an instance of a

Digitized by Google

rolling-mill engine which was very heavily loaded and running very fast. That engine had to have the brick-work repeatedly repaired. The excess of counterbalance, as Mr. Forney puts it, was exercised, I suppose, vertically, and crushed the brick-work under the crank end, and the makers of the engine had to alter their patterns so as to give an excess of bearing surface under that end of the engine to stop that result. I just cite this to show the evil influence of what Mr. Forney, I suppose, is referring to as overbalancing. It is certainly overbalanced vertically, but not horizontally. Now the question is, where will you compromise?

Mr. Morison.—Mr. Forney is undoubtedly correct in stating that it takes some time to get the full effects of any variation in weight or pressure, but I think he is entirely wrong in assuming that the blow is at the top of the driving wheel. The blow is struck by the driving wheel itself, and is struck on the rail at the bottom of the driving wheel, where the driving wheel is in contact with the rail. The stone, and not the man, really represents the rail. I think there is no doubt that it does take time to distribute the effect over the rail, and so over the roadbed, and this is in a measure a relief to the rail from the apparent immediate effects, but the effect comes just as much. There is a varying pressure which is a source of constant wear, and source of constant strain, on the whole engine, because, not only does it make a vertical disturbance, but it makes a continual difference in adhesion. Furthermore, I think there is no doubt that some serious accidents, which have never been explained, have really been due to this cause. Any one who has had anything to do with a railroad over an undulating country knows how trains run at the foot of grades, knows that often a heavy freight-train, at the foot of a grade, is running just as fast as it can go to get a momentum to take it up the grade beyond. Almost all bent rails have been found right down between two hills. I am inclined to think it has been rather fortunate that wheels have occasionally left the rails, and left their visible marks, for this has opened our eyes to the risks we are running.

Mr. Oberlin Smith.—I think Mr. Morison is right in saying that the alleged blow is struck by the wheel itself rather than by anything else.

Mr. Forney.—Will you allow me to ask a question? If you take a pulley which is not balanced, does that pulley produce a blow?

Digitized by Google

Mr. Smith.—No, sir.

Mr. Forney.—Now, if you put a balance in, it does produce a blow. Which produces the blow, the balance or the pulley?

Mr. Smith.—I am coming to that. I was just going to remark that there is not any *blow* there. A hammer blow is a sudden striking of something or another with something else which has a lot of living force. Now, in a locomotive wheel, it is purely an undulating pressure. We start at the point of balance with no pressure on the rail except that part of the weight of the locomotive that is on the wheel in question. Then the centrifugal force of the unbalanced parts tries to throw the wheel down or up, as the case may be, thereby increasing or decreasing the pressure on the rail. This action accelerates and diminishes periodically, but there is nothing *sudden* about it. If the rail were like putty or soap it would be embossed into definite waves. As, however, it is somewhat elastic it is only partially and slowly so affected. As to there being any hammer blow, I do not see where it is.

Mr. Strong.—I want to describe the action of the engine on this track that I examined on the North Penn. Road. These badly bent rails were at the foot of the grade, as Mr. Morison says, and on a curve. Now, the locomotive being coupled up on the quarters, of course the variation comes alternately on one side and then on the other. The result of it is, the lifting on one side, then the lifting on the other side, puts the engine into a rolling motion, and when you get up to the point where the wheel actually leaves the rail, the wheel comes up and then goes down in such a way as to strike the rail and bend it in. All these are down and in, some places as much as half an inch, perhaps two inches down—not in the whole length of the rail, but it would be between two ties. It is a regular kink. It is not a long, easy curve, but it is a distinct bend, almost as distinct as if the driving wheel was let down into it. In every case the rail is bent in two directions, down and in, never out, showing that the engine gets this rolling motion, and the wheels strike a blow as they come down and in.

Professor Webb.—I think you can see that it is the wheel that strikes the blow; that it is the wheel that is really the hammer, by remembering the law of mechanics that any body—in this case a circular body—whose centre of gravity is not in the centre of the circle tends to revolve about the centre of gravity and not

Digitized by Google

about the centre of the circle. In this case, if I am right, the centre of gravity of the wheel is about one-tenth of an inch from the centre of the shaft, and therefore the wheel is trying to revolve about this point. We are therefore running an eccentric wheel on the track, and it will give to the track a hammer blow, if you please to call it that. To have the wheel run smoothly the track has got to get out of the way, and the track, refusing to do this, makes all the trouble. If the track does not get out of the way the centre of the wheel has got to rise and fall five times a second through a fifth of an inch. To appreciate the real action of the virtually eccentric driver, suppose the wheel to be perfectly balanced and running smoothly, and then put upon the track a bar of iron, say one inch wide and varying in thickness from almost nothing to a fifth of an inch every dozen or fifteen feet, or whatever the circumference of the driver may be, and let the driver rush over it at full speed, bobbing up and down a fifth of an inch five times a second, or jumping clear of it in the attempt to do so.

Mr. William Forsyth.—It must be a satisfaction to railroad mechanical engineers, that after the very thorough mathematical analysis of the effects of the excess balance in locomotive driving-wheels by Mr. Barnes and Professor Webb, the first conclusion reached is, "the method in common use which balances two-thirds of the reciprocating parts is practically perfect, so far as the locomotive is concerned." We are interested also in the conclusion relating to the effect on the rails of this excess balance at high speeds, as accusation is frequently made by the chief engineers and roadmasters, who are responsible for the condition of the track, that locomotives, when balanced according to the above rule, often damage the rails by excessive blows or pressures from the drivers. Mr. Barnes's conclusion (*b*) would seem to sustain this view, but I do not agree that the danger-point is reached at 65 miles per hour for engines having wheels less than 6 feet (that is, say, 69 inches diameter), and the form of cross-head, piston, and front end of main rod now in general use on some of our American railroads. I will illustrate this by giving the centrifugal force of the excess balance in our 6-wheel connected heavy express engines, Class H, and our 4-wheel connected express engines, Class M, each having 69-inch drivers. In the case of 6-wheel connected engine the $\frac{2}{3}$ of the weight of the reciprocating parts is divided by 3 for one side, making $\frac{2}{9}$ in each wheel.

Digitized by Google

This, with a 19-inch piston and a cross-head weighing 250 pounds, amounts to only 160 pounds at crank-pin centre for one wheel, and the centrifugal force at 70 miles per hour is 6,373 pounds, and at 80 miles per hour it is 8,323 pounds. The speed at which the centrifugal force of this excess weight equals the static weight on drivers is 114 miles per hour. For the M engine, 4-wheel connected, the excess weight in each wheel is 225 pounds. The centrifugal force of this weight at 80 miles per hour is 11,700 pounds, and the speed required to make it equal to the static weight on driver, 16,500 pounds, is 95 miles per hour. Coming now to Mr. Barnes's conclusion (*h*), we must infer that it is prudent, and may be considered good practice, to run these engines at the speeds mentioned, and that damage to rails would not occur, because, at the speed of 114 miles for the H, and 95 miles for the M engines, the centrifugal force of the excess balance does not exceed the static pressure of the wheel upon the rail. These are my reasons for believing that the excess balance in well-designed American locomotives is not too great, and that they may be run safely, so far as damage to track is concerned, and at speeds of about 100 miles per hour.

In conclusion (*f*) Mr. Barnes states: "There appears to be no way of determining what the impact pressure is." "About all that is known is that it is sufficient at times to kink a 70-pound rail, when engines with small wheels and improper counterbalance run at high speed." There is no evidence presented, and I do not believe that any can be found in practice, to prove that an express locomotive, designed according to the best American practice, and balanced according to the rule given, has ever damaged the rails at any speeds thus far obtained. Further, there is no way of showing, by mathematics, that under the condition named any such damage would occur.

My own opinion of the whole question is that on nearly every road there is some bad practice which is irregular, and that in every case where 70-pound rails have been kinked, it has been due either to

(1) Small wheels running at excessive speeds.

(2) Abnormal balancing, permanently, by the use of too large a proportion of the reciprocating weight, or, temporarily, by the removal of the rods.

(3) The use of reciprocating parts entirely too heavy, and heavier than present good practice.

Digitized by Google

(4) A combination of the above.

Such cases, which cannot be called good practice, have resulted in a general attack upon present locomotive design, and a demand for radical changes in the arrangement of the reciprocating parts of the engines. The advocates of such changes have, so far as I can see, no good reasons for them, and they will find nothing in Mr. Barnes's paper to sustain any arguments they may present.

Prof. W. F. M. Goss.—Those who have given attention to the counterbalance problem, or have had occasion to study the stresses set up in locomotive frames by the action of the moving parts, will find a source of new interest in Mr. Barnes's complete and ingenious analysis; an especially significant feature is the diagram representing the path of the centre of gravity of a drive-wheel under the assumed conditions stated. This curve in this diagram shows that the vertical motion of the wheel is not the same during successive revolutions, but that there is a multiplication of effect extending through a series of revolutions; a conclusion which is quite in harmony with the results given by the Purdue experiments, to which reference has been made, and which are described at length in another paper.

Mr. Parsons.—I want to make a few remarks on the papers of Mr. Barnes and of Professor Goss. Taking Professor Goss's figures, that 400 pounds is the unbalanced weight at 1 foot radius

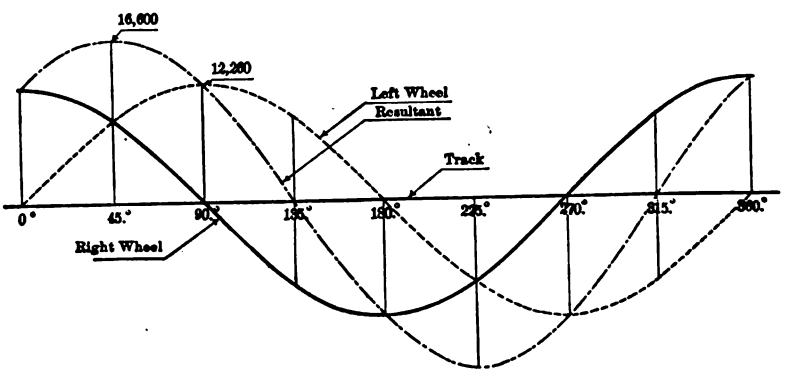

FIG. 118.

in one rear wheel, and assuming 300 revolutions per minute, I have drawn a curve to show the vertical unbalanced forces for one rear wheel (Fig. 118).

These forces are shown by the solid line, and the curve would be that for the rear right-hand wheel. It represents the vertical

Digitized by Google

components of the forces, and is a curve of sines. Now, on top of this draw another curve of sines, set backward through 90 degrees, shown dotted. It, of course, will be the curve for the wheel on the left-hand side. Now, the engine weighed 28,000 pounds on one set of drivers, so that 28,000 pounds was acting downward on one axle at the centre. Now, the vertical ordinates above the horizontal line represent the forces due to the unbalanced parts upward against the springs, and the ordinates downward represent the forces downward against the track, which, of course, in this case are against the supporting wheel. The figures, measured graphically, give a maximum lifting force of 12,260 pounds for each wheel. That force has a lever arm of the full length of the axle, while the weight has only a lever arm half the length of the axle. Thus, the unbalanced force in one wheel would nearly lift the wheel from the track. This result is illustrated in Professor Goss's diagrams, as you will see on page 313 of his paper, where, for 315.8 revolutions, the wheel on the right side nearly left the track. It just came up to the top of the wire, and fell. Also, at 310 revolutions the rear wheel on the right side of the engine did not quite rise to the top of the wire. But one wheel is operating at the same time as the other wheel, so that the forces due to the unbalanced weights are acting simultaneously in each wheel. In other words, the dash and dotted curve is the resultant of the other two. This resultant force has a maximum upward of about 16,600 pounds. You will notice that the maximum upward takes place just after the counterweight in the right-hand wheel has passed the centre and just before the weight of the left-hand wheel has reached the centre. This result is illustrated in the experiment with the wires. When the counterbalance has just passed the centre on the right-hand wheel, the left-hand wheel leaves the track. The maximum effect on one wheel has taken place and is decreasing, and the effect on the opposite wheel is increasing. It is also interesting to note that while the upward maximum pressure is not sufficient to lift the wheel from the rail at the speed assumed, the left-hand wheel does actually lift clear of the rail, while the right-hand wheel on the other side does not. That is shown in the paper on page 314, where the rear driver on the right side did not leave, while the one on the left side did, when running at 310.5 revolutions. Of course, these forces, acting intermittently on opposite sides, will produce a vibration of the engine body. When that engine body motion syn-

Digitized by Google

chronizes with the forces developed in the drivers, the effect should be maximum, and there is no doubt that such is the case. These calculations are, of course, theoretical; but the engine was also running on a theoretical track. The calculations appear to agree perfectly with the experiments made with the wires. It would be interesting, however, if possible, to measure the vertical oscillation of the engine itself on both sides at the same time that the wires are passing under the wheels. It could probably be shown that the effect was a maximum, due to the oscillations produced by the upward and downward forces of the unbalanced weights at the same time when the wire passed under the wheel without being crushed. I do not know whether the engine is so arranged that such a measurement could be made, but if it could I think it would be very interesting. In actual practice on a track there are, of course, a great many independent forces which tend to lift the wheels, which forces are not found, perhaps, under the more perfect conditions that exist with the experimental engine at Purdue University.

Now, I suggest that the reason for these results is probably that when the weight of the right-hand wheel has just passed the centre it has practically struck a blow against the springs of the engine. This action has ceased before the weight in the left-hand driver has reached its maximum force and the springs of the right side are beginning to recover. As the maximum upward force in the left-hand wheel is approached, the effect is greater than for the right-hand wheel, since the engine body is following the right-hand spring, that is now being released, and in consequence the left-hand wheel will lift from the track at speeds too slow to lift the right-hand wheel. The right-hand side of the engine is supposed to lead by a quarter revolution.

Mr. Barr.—I would like to ask the last speaker if that 16,600 pounds is not the resultant on the axle? It seems to me that neither wheel could be lifted unless the resultant was at least 14,000 pounds. Is not that 16,600 pounds the resultant on the axle?

Mr. Parsons.—It is the resultant on the axle, and is not sufficient in itself to lift the engine. But the experiments show that the engine leaves the track on the left-hand side at about 300 revolutions, while on the right-hand side it does not. I merely offer as a suggestion that this result is probably due to the effect of the upward force in the right-hand wheel which has not ceased before the force in the left-hand wheel begins.

Digitized by Google

Mr. Barr.—My point is that 14,000 pounds upward on either wheel would just lift that wheel from the track; 14,000 pounds on both wheels would lift both wheels from the track. If the upward force was less than 14,000 pounds, neither wheel would leave the track.

Mr. Parsons.—That is so. The experiments do not show that the right-hand wheel, at the speeds about which we are talking, left the track. My results are based on 300 revolutions. At 310.5 it did not leave the track, but at 310 revolutions the left-hand wheel did leave the track.

Mr. Barr.—What was the upward force on that wheel at that speed, do you know?

Mr. Parsons.—No; I did not calculate for 310.5 revolutions; but it must be a little greater than that for 300 revolutions.

Mr. Barr.—That 16,600 resultant would not lift either wheel?

Mr. Parsons.—No; not as a resultant force, and I do not propose to say that it should. I did not purpose to state that it does lift that driving-wheel. But I do state this, that probably the effect of the upward force in the right-hand wheel, combined with its springs, is not over before the left-hand one commences, and that the upward force has struck the springs, if I may be allowed that expression, on the right-hand side, and has perhaps reduced the apparent weight on the left-hand side by the time that the left-hand weight has reached its maximum, so that the left-hand wheel may leave the track under an upward force too small to lift it when at rest. The left-hand wheel, in Professor Goss's experiments, does leave the track at speeds when the right-hand wheel does not. I assume, however, that the right-hand wheel is the leading wheel.

Mr. Kent.—It seems inconceivable to me how a lifting force on one wheel can be transmitted across the axle and applied to the other wheel, which acts as a fulcrum. I can understand that the two lifting forces can be added together in their action—the two wheels together, or on the axle. But how any lifting force on one wheel can be converted into a lifting force on the other wheel I cannot see.

Mr. Parsons.—Mr. Kent does not follow me. The lifting force on the right-hand side strikes the springs, and the springs for an instant are compressed. There is a vibration set up in the engine body, and the effect is transferred to the opposite journal. It then reverses itself, perhaps, and comes back on the first journal,

Digitized by Google

so as to relieve for an instant the axle pressure on the journal on the left-hand side. At the same instant the counterpoise on the left-hand side is increasing towards its maximum upward force. The maximum effect is reached when the two combined show a maximum. Then, Professor Goss's experiments prove that the left-hand wheel leaves the track. I merely offer the above as a suggestion which may account for the agreement of the experiments with the curves as laid down, and as a reason why the left-hand wheel leaves the track at speeds too slow to lift the right-hand one.

Mr. Barr.—It seems to me that if the last explanation, which seems a plausible one, is the true reason for this observed fact, it is due more to a roll in the mass of the engine, and this is a question of strength of spring and mass rather than of combining these diagrams. It may coincide with that maximum point or it may not.

Mr. Parsons.—Mr. Goss says: "The first to be noticed is the rocking of the engine upon its springs, which motion tends to vary the pressure of the wheel upon the track, independently of the action of the counterbalance." Now, if there was no blow struck upon the springs, the engine body would stay perfectly still, on account of the manner in which it is erected. He says it does rock. What makes it rock? It is the upward and downward "blows" which are struck by the unbalanced counterpoises. Assuming 300 revolutions, this is the result on the blackboard, and it agrees exactly with the diagrams which Professor Goss gives of the result of actual experiments, made by passing the wires under the wheels; and the point at which the maximum effect takes place is coincident with that shown on the blackboard.

Mr. Barnes states in his paper that the flat spots in the tires of fast-moving engines "will generally be found following the crank, that is, at a point where the tire touches the rail when the crank has passed the 90 degree point or lower quarter, the engine running ahead." That is a point on the tire when the counterpoise has just passed the top centre.

Mr. Geo. R. Henderson.—Might I just call attention to the fact that the diagram shows what we all know very well—the reason why the slid places, or places worn most on the tire, are about $\frac{1}{8}$ of a revolution from the crank, because at that point we get the maximum lifting force on both wheels, and any slipping would occur at 45 degrees past the zero point, where both the

Digitized by Google

forces would sum up the greatest total. It is a matter well known to us all, but it is shown up very nicely in that diagram.

Mr. Geo. S. Morison.—I have not much to say, but I want to ask if an admission in Mr. Barnes's paper is a proper admission for an engineer to make. On page 288, under the head of *f*, Mr. Barnes makes the statement, which I think is undoubtedly true, that the impressed load due to the excess balance is often double the static load, and the pressure at the point of impact when the wheel lifts from the rail and drops is even greater. On the same page, in the 3d line, he says that the only practical way in which the excess balance can be reduced is by reducing the weights of the reciprocating parts. In other words, he implies that there is no possible way of correcting this trouble; that it is impossible to have a locomotive that will run at high speeds without an extreme variation in the weights on the track. It can be reduced, he says, but it cannot be eliminated. If it is reduced, we have only to increase the speed of the engine and the speed of the train, which I fear we shall soon do, to make up for all the reduction, and be just as badly off as we are now. Now, I do not think it is to be admitted for a moment that an engine cannot be built which will obviate this difficulty and not only reduce it; it *is* a possible thing to design an engine which will balance itself. I do not know that much should be said about a machine that has not yet been built, but Mr. Strong has designed an engine which meets this difficulty from an entirely different point of view from Mr. Barnes's conclusions, and which, I believe, will accomplish its object successfully. The main point is that we have before us conditions on the rails, shown in Mr. Barnes's paper and by a great deal of other literature to be as complicated conditions as we can imagine, and full of disturbances. It is a very fortunate thing that, in the last two or three years, these disturbances have been written about and investigated. We are coming to the same conclusion about running a locomotive over a railroad that some people find the human body to be in; when we examine it we wonder that a man can live, and we wonder that a train can stay on the track. I am unwilling, for one, to accept the conclusions of Mr. Barnes. I think the study of locomotive design should be based on eliminating these disturbances, which can be done, not merely on reducing them; it can be done by the simple process of balancing the parts that revolve by parts that revolve, and by balancing those which do not revolve by parts which do not re-

Digitized by Google

volve. There is no other way of reaching a result which will be satisfactory for all speeds and all conditions.

Mr. Geo. S. Strong.—I would like to mention one point which Mr. Barnes makes in his paper. His method of overcoming the difficulty, so far as it can be overcome in this way, is by reducing the reciprocating parts in weight, and by large driving wheels. According to his statement he can only reduce the reciprocating weights about 40 per cent. Now, we know there are a great many compound locomotives which have been built the last two or three years that have pistons and reciprocating weights on one side of an engine that weigh a ton; instead of weighing 250 or 300 pounds, as he gives, they weigh over 2,000. The tendency is toward compounding, and when we get these excessive weights and attempt to balance them in the wheels we get into this trouble worse and worse. Take the case I spoke of the other evening, where a Baldwin engine had left the track after spoiling three miles of 76-pound rails. Afterwards that engine was found to have only 80 pounds more counterweight than the usual practice for Baldwin locomotives to put into that size wheel. Only 80 pounds did the damage. Now we will find a great many locomotive builders to-day that are counterbalancing their engines fully up to the amount of the reciprocating weight, simply to get smooth-running engines that wont jig the train. Regarding the large-wheel question, we all know what the locomotive is called on to do to-day, and that is to take a heavy train and make a fast schedule over an undulating road. It must develop a very large horse-power. It must develop 1,500 horse-power to take a 12-car train and make 60 miles an hour with it. To do that it must have a high piston speed. Now there is not any reason why an engine cannot be so balanced as to eliminate this difficulty entirely, and then a 5-foot wheel is better for the average American road for these heavy trains than a 7-foot wheel is. We all know that the fastest schedules made to-day in this country are on local trains. They are not on the through trains, that do not make any stops, but on local trains, where you have to stop every mile or every few miles, and then put an engine up to 70 miles an hour to make the schedule. I have pulled such trains on the Pennsylvania road, where they make 33 stops in 33 miles and make that distance in a little over an hour. These trains go up to 70 miles an hour every opportunity they have between those places to make that schedule. Then you take it on an undulating

Digitized by Google

road, such as the road is between Philadelphia and Baltimore, on the Baltimore and Ohio—there is a succession of hills. If you get on a locomotive and ride over that road you will see what kind of a road it is. It is simply up and down all the time. There is a bridge at the foot of every grade. You take a big wheel and a heavy train, that train will sag every time you strike a grade. The fellow simply takes his brake off and lets the train go full tilt down the hill. As Mr. Fritz said to me a few years ago in regard to engines for the Lehigh Valley Road: "The ideal locomotive is the one that will make a maximum speed up hill as well as down." The Lehigh Valley had a speed of 35 miles an hour up those mountains, and they would not allow the engineer to run down the mountain faster than he would run up the mountain. That is good railroading. The question is one of very great importance. The question of the cost of the locomotive is not anything when you come to consider all these other questions. You have been discussing the axle—what breaks axles? Simply, bad tracks. What causes excess of wear of the locomotive? What makes the average repairs of a locomotive cost from three to five cents a mile? It is simply the vibration in the engine due to the knocks that the engine gets on the track, and unbalanced parts.

The Chairman.—We have heard Mr. Strong's new design of engine spoken of several times. I would like to ask Mr. Strong whether he has his plans far enough advanced to enable him to give us a general idea of what his engine is to be?

Mr. Strong.—I would say that I have had this matter under consideration for something like twelve years, and I started out originally with balancing with a beam, and my idea at that time was to make the centre of the beam between the two drivers, having this beam coupled to the cross-heads. I afterwards designed another engine in which I had the beam farther forward. Now I very soon gave up that idea, from the fact that it is a fundamental principle in any machine where you have so many revolutions and so many changes of direction of these parts, you cannot afford to have a beam, and add to the weight of your reciprocating parts. In fact, the beam centre, although it might be ten inches in diameter, would wear very rapidly, and a beam in that place for a very high speed is not practicable. I gave that up, and devised the scheme of Figs. 119 to 121.

In this case we have a 4-cylinder engine. The high-pressure cylinder is inside, coupled to the crank axle, 9 inches in diam-

Digitized by Google

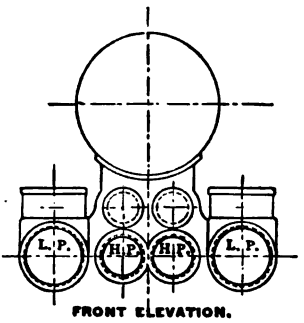

FRONT ELEVATION.

FIG. 119.

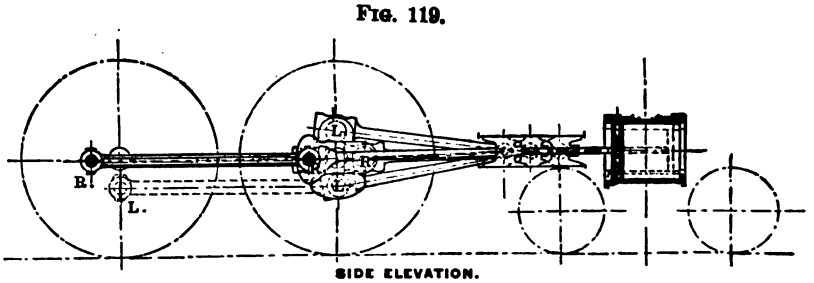

SIDE ELEVATION.

FIG. 120.

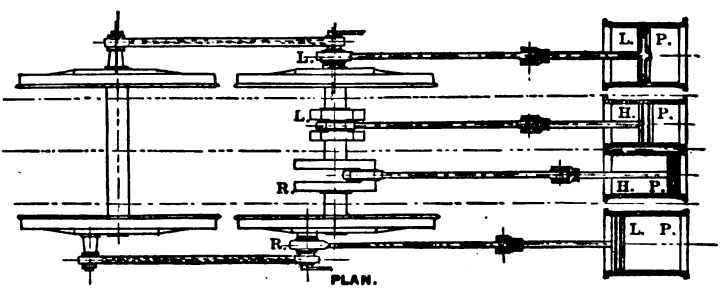

PLAN.

FIG. 121.

eter, and made out of nickeled steel, oil-tempered. The axle is so much in excess of the strength of any ordinary straight axle that the factor of safety is very much larger than used in any ordinary machine of the same power. Then the distance between the two centres is as close as we can make it, and not large enough to cause any great disturbance in transmitting that force around which would tend to revolve around this centre, of course. Then I make a low-pressure piston, 24 inches in diameter, made out of $\frac{5}{16}$ steel plate, having the piston-rod itself made out of nickeled steel and chambered out the full length.

Digitized by Google

The piston-rod is only $\frac{1}{2}$ inch thick. The piston itself is only $\frac{5}{8}$ inch thick. The working surface is a cast-iron surface. The plates that form the piston are riveted on to the head, which is chambered out, making the piston-rods just as light as we can make them. Then we make this piston heavier, but in the same way to correspond in weight with that piston, so that our reciprocating weights are exactly the same on the two cranks that are directly opposite. That enables us to reduce the amount of revolving weights very much. In fact, we have no reciprocating weights to balance in the wheel, and we balance this crank and these revolving parts at the same distance from the centre of the driver that these revolving parts are, so that we do not pretend on this axle to take care of the vibration due to these parts, or make the two cranks balance one another. One crank is 90 degrees from the other, and the others 180 degrees from the first ones, so that these two pistons, being about 17 inches in diameter, are large enough to slip the drivers. They do not require any starting valves. In fact, we start just the same as an ordinary engine would start, and as quick as it could. For a part of the revolution the low-pressure piston will help us, so that the engine never works high-pressure but always compound. The cost, of course, of these parts, until we have special facilities for making them, will add something to the cost of the engine, and we expect to reduce the wear, and to reduce repairs enough so that the interest on the investment will be more than saved by reduced repairs.

The Chairman.—Will you be kind enough to state how you start that starting-gear, and get the full benefit of starting moment?

Mr. Strong.—We have our two high-pressure pistons on the crank at 90 degrees from one another, and they are large enough diameter to slip the wheels.

The Chairman.—You can start with a high-pressure piston without any aid from the low-pressure at all?

Mr. Strong.—Yes. I should be very much pleased a little later to give the Society full data in regard to tests we are going to make in a short time. We would like very much to test it on Professor Goss's testing machine, and give you the results of those tests.

*Prof. W. F. M. Goss.**—It has been said in the course of the

* Author's closure to discussion on paper No. 625, under the Rules.

Digitized by Google

discussion, that the practical value of my paper is limited by the fact that the wheels experimented upon were very much overbalanced. It is, indeed, shown by the paper that the balance carried by two of the wheels was more than 50 per cent. in excess of that allowed by the average of five different rules, but it is also shown that practice cannot always conform to the rule. The rule may require 80 per cent. of the reciprocating parts to be balanced, but to secure a smooth riding engine, the rule is violated, and 95 per cent. or even 100 per cent. of the reciprocating parts are balanced. The rule also provides for an equal distribution of the balance for reciprocating parts, among the several coupled wheels, but practice makes use of an unequal distribution. That is, when a result is desired which cannot be had by an adherence to the rules, the rules are departed from. As a matter of fact, therefore, one is not required to look long on the road to find wheels carrying a balance as heavy as that carried by the rear wheels of the Purdue locomotive.

But even if we assume that there is no violation of rule, the conditions of the experiments do not fail to meet the case. The first results presented are those which were obtained from a wheel (forward wheel) balanced quite in accord with the rule, and the first formal conclusion noted is that "wheels balanced according to usual rules . . . are not likely to leave the track through the action of the counterbalance. . . ."

*Mr. David L. Barnes.**—Mr. Forney thinks that the inertia of the driving wheel and the parts below the spring must be overcome before the wheel can lift from the rail; the fact is, that these parts get into oscillation between the spring of the rail and the driving spring, and may lift from the rail by reason of an increase in amplitude of oscillation before the centrifugal force is sufficient to lift the wheel of itself. That is to say, the wheel may lift from the rail before the centrifugal force is equal to the normal weight of the wheel on the rail. This I have referred to in Conclusion (*g*).

Mr. Forney says that the Purdue locomotive was overbalanced when compared with the common rules, but to show that this is not the case I will refer him to a report on counterbalancing, presented at the November meeting of the Southern and Southwestern Railway Club, in which are given nineteen rules, some of which, if followed out in the case of the Purdue locomotive, would

* Author's closure to discussion on paper No. 624, under the Rules.

Digitized by Google

give as much, if not more, counterbalance than is now on the Purdue engine. These rules are shown by Table D, which is taken from the *Railroad Gazette*, January 11, 1895, page 24.

TABLE D.

No. of Rule.	Per cent. of weight of main rod to be taken as reciprocating weight.	Per cent. of total weight of reciprocating part to be balanced in main wheel for two-coupled locomotives.	Per cent. of total reciprocating parts to be balanced in rear wheel.	Remarks.
1	50	50	50	
2	.....	44	22	This rule only balances ⅛ of revolving parts.
3	.....	40	40	
4	.....	33	33	
5	33	33	33	When reciprocating parts are light.
		37.5	37.5	When reciprocating parts are heavy.
6*	.....	.....	.....	
7	†	33	33	
8	.....	100	none	
9	50	66	none	
10	33	50	50	
11	.....	50	none	Light engines.
		100	none	Heavy engines.
12	33	33	33	
13	50	33	33	
14	†	50	none	Passenger engines.
	†	33	none	Freight engines.
15	50	50	50	
16	.....	50	50	
17	.....	50	50	Approximate.
18	.....	50	50	Approximate.
19	.....	50	50	Approximate.

* Balance until engine rides smoothly and use no counterbalance for freight engines.
† Weight of front end of main rod when resting on scales.

Some of these rules are used on prominent roads in this country. One of the largest roads here balances some of its locomotives just about as the Purdue engine is balanced.

It is not quite clear what Mr. Forney means by "the superfluous effect of the action of the counterbalance." If Mr. Forney means all of the effect of the "excess balance," then he is quite right in saying that it is only the "excess" which has a tendency to raise the wheels from the track. But if this construction of his remarks is correct, then Mr. Forney is wrong in saying "It is for this reason that it is only when the wheel is over-balanced that this effect takes place." This appears from the fact that all

Digitized by Google

locomotives of common construction must have some "excess balance" to counteract the effect of reciprocating parts, or they would be unsafe to run, and such engines are not to be considered as "over-balanced."

Mr. Forney thinks that the lifting of the wheel from the track, exhibited by Professor Goss, does not seem to be "of so much importance as would appear from the paper before us." On the contrary, it seems that the importance of Professor Goss's work has impressed itself very strongly upon the minds of railroad men. The single fact that the engine is balanced like a good many others in this country, and that at 60 miles an hour the wheel lifts from the rail, or carrying wheel, is enough of itself to produce a lasting impression.

Mr. Forney's amusing examples to illumine his remarks are proverbial, and in this case he has made no exception. Perhaps the funny side of what he has said is none the less funny because he happens to have got the sledge-hammer, the stone, and the man's stomach somewhat mixed in order in the application to this case. The stomach is all right, for that represents the rail, but the rock, being the heavier body, is only to be logically taken as the driving wheel. Now, if the circus man had put the sledge-hammer on his stomach, and if the attendant had hit it with the rock, he would not have had such a comfortable smile on his countenance when he rose to face the audience.

Professor Webb thinks that "Perhaps undue attention is attracted by the fact of the wheel lifting." But Professor Webb has not shown that the severe bending of the rails, which has taken place in practice, is caused by anything else than the lifting of the wheel. While it is true that it has been assumed that bent rails have been caused by wheels lifting from the track, and it has not been proven, yet the evidence is so strong that one can almost believe that the burden of proof is on the "other fellow," who holds that the lifting of the wheel is unimportant.

Mr. George Strong gives an example of a locomotive that was certainly in bad shape, not only before he changed the balance, but afterwards as well, for I have never known but one locomotive to give trouble from sheared bolts, because of the weight of the counterbalance, and that locomotive was a 4-cylinder compound, with the reciprocating parts heavy enough for a large river steamboat. I suspect that, in Mr. Strong's case, there was something wrong about the compression line on the indicator

Digitized by Google

card, and that the shaking may have been due to a lack of compression to absorb the momentum of the reciprocating parts gradually. If I remember correctly, his engine had a peculiar valve motion.

Mr. Strong's attention might be called to the fact that the repairs to a locomotive and their causes are, after years of experience, pretty well understood, and it would require quite a stretch of imagination to bring one-third of those repairs within limits of the effect of the counterbalancing. One-third of the wear and tear of a track is a very large amount to attribute to counterbalancing, on a road where the mechanical department is doing its duty. Rail wear, low joints, wash-outs, decayed ties, and a number of other important track repairs cannot be attributed to counterbalancing. It may be that broken and bent rails, broken fish-plates, and, to some extent, worn ties and loose spikes, are considerably increased by the effect of counterbalancing, but are not wholly caused by it. But all of these last mentioned do not make up one-third of the wear and tear of tracks. It must be remembered that for every locomotive driving wheel that goes over a given point in the track, there are about 80 car wheels, some of which may have bad flat spots, and if they have it would take a pretty bad piece of counterbalancing to give an equally bad effect.

The fact of wheels lifting from the track has been known for a good many years. Mr. Charles Paine, a prominent member of this Society, has told me of a test made a number of years ago when he was on the Lake Shore road. In this case, if I remember correctly, the rails were chalked, and a locomotive without truck wheels was run at high speed over the rails with the result that there were some points on the track where the chalk was not disturbed.

Mr. Dean regrets that the mechanical departments of railroads are not on a higher plane, but he forgets that locomotives are almost always counterbalanced by the locomotive builders, and that they are primarily responsible. This is pretty clearly shown in the reports on counterbalancing before the Southern and Southwestern Railway Club, to which I have before referred.

In answer to Professor Lanza's question whether any one "has ever tried balancing only the vertical, and letting the horizontal go, and what happens?" it is to be understood that he means the balancing of the revolving parts and omitting all balance for the reciprocating parts; this has been tried in greater or less degree

Digitized by Google

a good many times, with the uniform result that as soon as the engine moves rapidly the shaking is beyond endurance.

Mr. Strong is wrong in assuming that the rolling motion is what bends the rails. The time of vibration of the rolling is longer than the time of revolution of the wheel; that is, the rolling of the engine is slow and easy compared to the vertical oscillation of the driving wheel. It may happen that the engine rolls down on the same side on which the counterbalance is down, and may slightly increase the tension of the driving springs on that side, but this would be an unimportant increase compared with the effect of the counterbalance itself.

Professor Webb's illustration of the uneven track is a very good one, and seems to meet the conditions exactly.

This discussion has not taken sufficient notice of the important fact that when locomotives are run over the road without rods the condition is an aggravated one, and damage is very likely to result, even at ordinary speeds. Some railroad men know this from practical experience, and have tried to impress on the operating departments the necessity for reducing the speed of trains when "dead" engines are being hauled.

Mr. Parsons assumes that, in the case of the Purdue locomotive, there is 28,000 pounds acting down at the centre of the axle. In fact, there are two forces, of 14,000 pounds each, acting down, one on each side. The centrifugal force of the counterbalance acts just outside of the point where the larger part of the 14,000 pounds bears, and one of these forces almost directly opposes the other. So far as the lifting of the wheel is concerned, it is seen that the centrifugal force acts nearly directly opposed to the weight of the wheel itself, and a little outside of the bearing point for the main part of the locomotive, as that rests on the springs just inside of the wheel. In this way the centrifugal force has but little leverage in its favor to aid in lifting the wheel.

The logic of claiming that the effect of the rocking of the engine sideways has an important bearing on the lift of the drivers is not clear. The drivers revolve very rapidly, and the engine oscillates with comparative slowness, so that the two coincide only accidentally. It is true that the pulsating nature of the centrifugal force, in a vertical direction, does set up a rolling motion in the engine, but the rolling motion and the pulsations of the centrifugal force do not synchronize, and the rolling of the engine takes place in its own peculiar time. It may happen that the

Digitized by Google

two motions, *i.e.*, rolling and lifting, will coincide for an instant. At such times the pressure on the track is greater, or the lift is greater, according to whether the coincidence is at the upper or lower point of revolution. Again, when these motions act contrariwise the effect may be reduced. In service the engine has many accidental motions, which are far more important than the rolling, but it is impossible to take these into account in any calculation so as to determine the lift. They must be allowed for by that uncertain but valuable aid to the engineer, the "factor of safety."

There is no real difference between the action of the two sides of the Purdue engine in the matter of lift; the differences that have been found are principally due to the non-duplication of the succeeding revolutions, and also to the rolling of the engine, which makes accidental variations. Probably, if there were enough of the wires taken from the wheels, there would be found averages for both sides that would agree.

What Professor Goss has clearly shown is that the *wheels do lift*, and the rear driver lifts more than the front in his engine, and further, that succeeding revolutions do duplicate each other. This paper of Professor Goss's is an example of the sort of really and immediately useful information that we may expect to get from shop tests of locomotives. If the wire he has shown had been obtained from a locomotive in service there would have been claims that the wheels lifted for reasons other than true reason. As it is, the uncertainties have been so far removed that the true reason stands out so that all can see it.

Mr. Henderson says that it is well known that the worn places on tires appear at about one-eighth of a revolution from the crank. Probably he means back of the right crank, as at that point there is the maximum lifting tendency when the right crank leads. We are supposed to be looking at the right side of the engine. It should be noticed that this would bring the most worn place 45 degrees ahead of the left crank and 45 degrees behind the right crank, and not on the same place on both left and right wheels. A large number of tire diagrams, when carefully examined, have shown that the worn spots do not appear as claimed, but, instead, are very irregular in location. Again, it appears that there is no slipping of drivers at speed; I have tried to measure it a good many times. In one case, on a run of 17 miles, a round trip gave the same number of revolutions

Digitized by Google

going up a grade with a heavy load as returning without load. If there is any wear of great amount, due to slipping, it must take place when the engine is starting up and not when the engine is at speed. So far as I can determine, the tires of a locomotive wear more by the pulverization of the material than by slipping. If they do wear by pulverization, then we should look for the least wear when there is the greatest tendency to lift. This, it appears, is the case so far as there is any evidence of what the wear is at speed. An average of a large number of diagrams of tire wear, carefully taken by the Chicago, Burlington and Northern Railroad, show that the point of maximum wear is so affected by the wear in starting up trains that its location is irregular, and cannot be connected with the effect of counterbalancing, so far as I can see. In considering the effect of the lift on tire wear by pulverization each wheel must be considered independently of the other wheel on the same axle.

If my remarks in the paper, under conclusion (*c*), are to be taken as Mr. Morison says, then Mr. Morison is right and I am wrong; but, on the other hand, if the language of that conclusion is to be followed, then I think that I am right.

The language of that conclusion is:

"(*c*) The only practical way in which the 'excess balance' can be reduced is by reducing the weight of the reciprocating parts."

I do not think that the words there given imply that there is no way of getting rid *entirely* of the "excess balance." It would be an error if it did, for there have been several locomotives built with practically no "excess balance;" the Shaw locomotive, for instance. This shows that there is a *possible* plan. The difference between us is evidently as to the meaning of the word "practical" as here used. I am sure that no one who has the care of locomotives would want four cylinders in the place of two if it can be avoided. Four cylinders and no "excess balance," on any practical plan of construction, mean a double crank-axle, two extra sets of guides, two extra cross-heads, main rods, and steam-valves, and at least one extra set of valve motion parts, or their equivalents. Now, all of this extra machinery would be used for the purpose of doing away completely with the "excess balance," which is not the end sought. What is wanted is to get rid of damage from the "excess balance," and this can be done by reducing the weight of the reciprocating parts, as is now

Digitized by Google

done in Europe, and has been done for torpedo-boats and other engines.

In the face of the fact that a reduction of the reciprocating parts that will remove all damage to the track from the "excess balance" can be easily and inexpensively made, I feel that I am justified in claiming that such reduction is the simple and economical way of reaching the desired end, and therefore it is the only "practical" way. I may have written too much from the standpoint of those who feel that simplicity is the prime essential of a practical design of locomotive, and to that extent I may be prejudiced. If so, then it is because of a knowledge of the troubles that arise on railroads when complication enters locomotive or car design. When there are but a few engines complication can be cared for. But when strikes, wrecks, engineers who are not machinists, scant shop space and no surplus engines, and, most of all, when a goodly number of locomotives in total, perhaps a thousand, have to be cared for at outlying shops, the simple, plain, American locomotive becomes very attractive, and the word "practical" has a pretty definite meaning, which cannot be expanded to cover four-cylinder locomotives with double-crank axles for general work. What may be true of special cases hardly enters here.

It is claimed that as the speeds increase we shall be as badly off with our lighter reciprocating parts as we are now with the heavy ones. This would be true if the speed increased enough, and the diameter of the drivers did not increase with the speed.

Let us take an example, an 8-wheel engine, which is the type that has the most "excess balance" per wheel. Such an engine, with a 20-inch cylinder, would now have about 720 pounds of reciprocating parts. It is found that one-third at least can go unbalanced on a heavy engine, at a speed of 70 miles an hour; that is, 240 pounds can be unbalanced when the drivers are 5½ feet in diameter. If, now, the reciprocating parts are given the proper design, the total weight will not be more than 450 pounds —call it 500 pounds. Now, 240 pounds can remain unbalanced, and the balance, therefore, need be for only 500—240 pounds, or 260 pounds, or 130 pounds for each driver of an 8-wheel engine. Suppose that it is desired to run at 100 miles an hour, and surely that is high enough when we think of the average track, crossings, and curves now common. No one would put less than an 8-foot wheel under a locomotive for regular work of that sort.

Digitized by Google

The centrifugal force of this balance, when divided between the two drivers on one side, is 5,500 pounds, a far too small amount to make the condition dangerous.

The bad condition of some engines at the present time is not necessary; it exists where designers have been thoughtless, or where mistakes have been made in the shop. This is very well shown by the remarks of Mr. William Forsyth, of the Burlington road, in the discussion of this paper.

Mr. Morison differs from the paper mainly in the standpoint from which the matter is looked at. Mr. Morison thinks that the "excess balance" should be removed, and offers a new and uncommon arrangement of driving-gear for that purpose. The paper holds that the "excess balance" should be reduced as much as practicable, and shows how this can be done with present designs to an extent that will so nearly remove the detrimental effect on the track as to put the matter within the limits of reasonable things.

Mr. Strong cites a particular type of compound, and shows truly how the effect on the track may be too much after the counterbalance has been reduced to the lowest possible point by reducing the weight of the reciprocating parts. Designs that give such conditions are not omitted from the consideration of the subject in the paper, but fall under conclusion (*h*), where it reads:

"But it is sufficient to know that for the good of the track, and to prevent broken rails, and for the safety of a train following a locomotive, it is not prudent to run a driving-wheel at a speed where the centrifugal force of the 'excess balance' exceeds the pressure of the wheel upon the rail."

A paper of this kind cannot take into consideration all designs of locomotives, except in a general way. If any one is running locomotives with such an "excess balance" as Mr. Strong mentions, it is being done thoughtlessly if the engines are required to make high speeds. There is in the paper no warrant for running any such "excess balance."

Mr. Strong tells us that locomotive repairs are made necessary by the "knocks that the engine gets on the track, and the unbalanced parts;" but he does not show us how the use of four cylinders and a double crank will reduce the knocks from the track, or the cost of repairs. A close study of the distribution of the costs of repairs reveals the important and pertinent fact that

Digitized by Google

most of the cost is found in keeping up those parts that are not at all affected by the action of the unbalanced forces. Bad water and every-day wear and tear are the causes of a major part of the repair costs.

Mr. Forsyth does not agree with conclusion (*b*), which is as follows:

"The 'excess balance' now generally used for the reciprocating parts, and counteracting about two-thirds of the maximum inertia of those parts, is too great for speeds above sixty-five miles an hour, with drivers less than six feet in diameter, as the track is liable to be damaged by the excessive rail-pressure that it causes."

Mr. Forsyth shows clearly that the engines on the Burlington that are under his charge do not endanger the track at a speed of 65 miles an hour. There are a good many engines on other roads that are equally safe, but also a good many that are not. Probably Mr. Forsyth is right in saying that the writer has set the size of driver too high, or the speed too low, for the limits of good practice, but it is certainly on the safe side; and there are many locomotives now running that fall under the writer's criticism and are not safe to run at a speed of 65 miles an hour with a 6-foot wheel. Further than this, there is the every-day experience that locomotives run faster than 65 miles when they are intended to run at lower speeds; and still more important is the fact that a great many engines with wheels not more than 4½ feet in diameter are run down grades at 65 and 70 miles an hour. Some such locomotives have the same or heavier reciprocating parts than those with heavier wheels.

I think that conclusion (*b*) would nearer express the practical point that the writer wants to bring out if it should be made to read as follows, and I have asked our secretary to change that conclusion accordingly:

"(*b*) The 'excess balance' now often used for the reciprocating parts is too great for speeds above sixty-five miles an hour, with drivers less than six feet in diameter, as the track is liable to be damaged by the excessive rail-pressure that it causes."

To show the practical bearing of this conclusion, the following table, from the *Railroad Gazette* of January 11, 1895, page 24, is appended. This table was made up from a very interesting report on the subject of counterbalancing, made to the Southern and Southwestern Railway Club by Messrs. Sanderson, Pomeroy, Gentry, and Gibbs.

Digitized by Google

TABLE C.

COMPARATIVE WEIGHTS OF RECIPROCATING PARTS OF MODERN LOCOMOTIVES.*

	Class.	Diameter of cylinder in inches.	Weight of one piston and head. Lbs.	Weight of one piston-rod. Lbs.	Weight of one cross-head. Lbs.	Total weight of reciprocating parts on one side, in lbs.	Total weight main rod, in lbs.	Boiler pressure, lbs. per square inch.	A.	B.
	N. & W. "T."	14	116	170 s.	.....	.....	.....	180	.....	.....
E	L. & N. W. Ry.	15	67 w. i.	88 s.	152 A c. s.	307	.....	180	.....	.....
	N. & W. "O."	16	153 c. i.	69 w. i.	131 B c. i.	353	240 w. i.	140	18,300	14,900
	N. & W. "Q."	17	182 c. i.	83 w. i.	129 B c. i.	394	272 w. i.	140	20,500	16,700
E	L. & S. W.	17½	133 c. i.	126 s.	256 Dw. i. & c. i.	514	.....	....	.....	.....
	N. & W. "K."	18	192 c. i.	83 s.	188 B c. i.	463	328 w. i.	140	24,300	19,800
E	M. S. & L. Ry.	18	144 c. s.	72 s.	120 B c. s., c. i.	336	....	....	.....	.....
	B. & O. Cole	18	139 c. s.	90½ s.	93 B c. s.	322½	.....	....	.....	.....
	P. R. R. "P."	19	180 c. s., c. i.	98 s.	148 3 bar	432	311 f. s.	175	22,800	18,600
	Schenectady B. & A.	19	174 g. i.	130 s.	202 4 bar s.	506	422 f. s.	180	27,700	22,500
E	G. W. Ry.	19	207 c. i.	168 w. i.	138 B c. s.	513	.....	....	.....	.....
	N. & W. "H."	19	185 c. i.	95 s.	160 B c. s.	430	363 w. i.	140	23,600	19,500
E	N. E. Ry.	19	155 c. s.	131 s.	155 B c. s.	441	446	....	25,700	21,400
	N. & W. "C."	19	202 c. i.	98 s.	175 B c. s.	475	350 w. i.	140	25,200	20,500
	N. & W. "D."	19	202 c. i.	96 s.	150 B c. s.	448	.....	155	.....	.....
E	L. & S. W.	19	142 c. s.	178 s. ex.	240 Dc. s. & c. i.	560	.....	....	.....	.....
	N. & W. "G."	20 b	250 c. i.	104 s.	182 Cc. s. & i.	536	351 f. s.†	150	27,500	22,500
	N. & W. "I."	20	250 c. i.	104 s.	215 D. c. s.	569	518 w. i.†	145	32,000	26,500
	L. & N.	21	351 c. i.	126	277 D	754	375	....	36,500	28,300
	N. & W. "T."	14 / 24	116 c. i. / 320 c. s.	170 s. ex. / 230 s. ex.	317 E c. s.	1153	620 S†	180	56,800	45,500
	Rog. Com.	29	450 c. i.	.....	.....	.....	.....	....	.....	.....
E	L. & N. W. Com.	30	288 c. s.	.....	.....	.....	.....	....	.....	.....
	Rd. L. W.	31	387.5 c. s.	.....	.....	.....	.....	....	.....	.....

STYLES OF CROSS-HEADS.—A, Webb style, two bar; B, four bar; C, two bar; D, Laird, E, Vauclain, four bar; "E," English engines.

NOTES.—Materials—Cast iron, c. i.; cast steel, c. s.; wrought iron, w. i.; fluted steel, f. s.; steel, s.; gun iron, g. i.

* "The diameters of the wheels are not given, but there is no reason to suppose that the weights of the reciprocating parts given would not be found on locomotives with five-foot drivers, and it is not uncommon to run an engine with five-foot drivers at sixty miles an hour. Believing these conditions to be possible in most cases, and to be actual in many cases, we have added the column A to Table C to show the centrifugal forces of the 'excess counterbalances' used for reciprocating parts, when all of the reciprocating weight, including one-half of the main rod, is counterbalanced and equally divided between two pairs of drivers, which is the plan outlined in six of the various common rules given in the report. The next column, B, gives the centrifugal force when the 66 per cent. of the reciprocating weight, including one-half the main rod, is balanced, as recommended by the committee in Conclusions 2 and 7. These rules were selected from the others because they give the maximum centrifugal force that is permitted by the conclusions of the committee."

† These three rods are all same length and for same powered engine.

It will be seen from this that some of the common rules are such as to give more rail pressures than are safe, and if it were necessary to balance such weights as these, and to follow some of the rules in use in this country, there would be no escape from more than two cylinders, and the plans of Mr. Morison and Mr. Strong would find a more extended field of application. But it is not necessary to follow these rules, as we have seen from the papers before this meeting, and therefore it should be said that some of the rules in use are badly in error, although they appear in quite a number of handbooks on locomotive design.

Digitized by Google

Mr. Forsyth thinks that, from conclusion (*h*), it is fair to assume that it is prudent to run a locomotive when the centrifugal force of the "excess balance" does not exceed the weight of the driver upon the rail. The conclusion says that it is *not prudent* to run when the centrifugal force is in excess, and I do not know that I am as ready to say what *is* prudent as I am to say what is *not* prudent. It is sometimes easier in engineering work to conclude what is *not* safe than to determine what *is* safe, and I think this is a case of that kind. There can be no doubt but what Mr. Forsyth's engines are safe to run at a speed of eighty miles an hour, and perhaps higher, but with our present knowledge I do not know where to draw the line of the limit of safety.

I can agree with all of Mr. Forsyth's conclusions excepting the third. There are cases of damaged track where the reciprocating parts could scarcely be made lighter under the fundamental conditions of the designs, and in such cases we should have to add to those conclusions the words, "or the use of designs that cannot be balanced so as to be safely run at common maximum speeds."

The engineer in charge of the permanent way of a railroad is continually looking for the causes that give damaged track—not alone bent rails, but other damages as well; and when he sees a lot of bent rails that have been bent by a locomotive it is but natural to look to the locomotive as being the cause of small as well as large damages, and it is this that has led to the present discussion, and that has brought out the attack on the present locomotive design that Mr. Forsyth speaks of. That such an attack is justified, is shown by the fact that within a year locomotives have been built that are not safe to run at seventy miles an hour on the heaviest track. In any general criticism of this kind the good designs suffer with the bad, and it is only by defining the limits that we can learn where any particular design stands in the scale of safety. This is the prime object of the present papers on counterbalancing, and their purpose will have been fulfilled if, at the end of the present investigation, there is established the safe limit beyond which it is not safe to pass with the "excess balance."

Digitized by Google

DCXXVI.*

RUSTLESS COATINGS FOR IRON AND STEEL, GALVANIZING, ELECTRO-CHEMICAL TREATMENT, PAINTING, AND OTHER PRESERVATIVE METHODS.

SECOND PAPER.

BY M. P. WOOD, NEW YORK CITY.
(Member of the Society.)

THE correspondence that has ensued since the presentation of the paper on "Rustless Coatings for Iron and Steel," at the Montreal meeting (June, 1894)† has induced the author to supplement that paper with some additional matter upon the same subject that may prove of interest enough to reward perusal.

That the subject is one that will not be tabooed or laid, like Banquo's ghost, is quite apparent if one but gives even a cursory glance through the Patent Office Reports, and notes the many anti-corrosive and preservative compounds that are yearly issued for the alleged protection of iron structures, and whose practical merits, as a rule, are summed up in the final judgment of the user after he has paid the bill for the application of the compound, "that the metal did not appear to rust any faster after it had been applied than it did before."

Painting may well contest the claim with printing for the title "the art preservative," if the report of the census year 1890 is to be relied upon, which gives in the statistics of manufactures in the United States:

Number of establishments reporting	382
Aggregate capital employed	$34,009,208
Live assets	19,110,021
Average number employes	8,737
Total wages paid	$5,605,626
Cost of material used	24,930,582
Value of products	40,438,172

* Presented at the New York meeting (December, 1894) of the American Society of Mechanical Engineers, and forming part of Volume XVI. of the *Transactions*.

† *Transactions of the American Society of Mechanical Engineers*, Vol. XV., 1894, Paper No. 598, pp. 998-1073.

Digitized by Google

These amounts do not include any items embraced in the preparation of the oils and solvents or vehicles, varnishes, or chemical operations in the preparation of colors, the army of men employed in applying or spreading the mixtures under the name of painters, but relate solely to the production of paints as they are ground in the dry or in oil or other vehicle, and for all purposes; and do not include the imports of paints or pigments, dry or liquid, these articles being about one million of dollars value yearly, the exports of these articles being about equal to the imports.

Assuming that sixty cents per gallon was a fair price for all these paints on an average, and that thirteen pounds was an average weight per gallon, the above product was equal to about 67,400,000 gallons of mixed paints, that weighed 438,100 short tons; and on the basis of five hundred square feet of surface covered by one coat per gallon of paint, the surface covered equals 773,645 square acres or 1,209 square miles.

What proportion of these amounts were really applied for the preservation of metallic structures on shore and afloat, it is hard to conjecture; but a one-fourth part may be taken as the yearly allowance to cover the effects of corrosion in progress in some degree in about every metallic structure that meets the eye, and may be considered as the annual contribution to the coffers of oxygen.

Experiments made by Mr. B. H. Thwaite, A. M. I. C. E., in order to ascertain the life of wrought iron when exposed to the corroding effects of the atmosphere in a manufacturing town and in an unprotected position, demonstrate, with a tolerable degree of exactitude, that a bar of wrought iron, one inch by four inches, would be entirely corroded away in a little over a century.

How rapidly corrosion progresses under ordinary conditions of exposure and in locations where it is least expected, is forcibly shown by Mr. C. Ward,* from whose paper I select some data of interest.

"THE CORROSION OF BOILERS AND STEAMSHIPS.

"Experiments conducted by the Admiralty, Board of Trade, and Lloyd's, prove that steel corrodes much more rapidly than iron when exposed to the action of salt water; also, that the com-

* A paper read before the *Goldsmiths' Engineering Society* and published in *The Practical Engineer*, London, Sept. 21, 1894, Vol. X., No. 395, pp. 224–226.

Digitized by Google

moner brands of iron corrode less than the better brands when exposed to the same influence.

"With steel unprotected and exposed to the action of the weather and sea-water, corrosion advances at the rate of one inch in depth in 82 years, while under the same conditions for iron the rate is one inch in 190 years. When exposed to the weather and fresh water, the corrosion is at the rate of one inch in 170 years for steel and 630 years for iron. When always immersed in sea-water, the periods are one inch in 130 years for steel and one inch in 310 years for iron; and when always immersed in fresh water, the periods become 600 years for steel and 700 years for iron.

"These conclusions are the results of years of patient experiment and observation by Mr. Parker of the Board of Trade and Mr. Phillips of the Institute of Civil Engineers.

"In 1879 Sir Nathan Barnaby stated that, when the mill scale was left on the surface of steel plates, its effect upon the neighboring bared metal was as strong and continuous as copper would be; and in 1887 Mr. Rialton Dixon gave before the Institute of Naval Architects his experience as to a vessel built entirely of steel some eight years before, and which was found to be greatly corroded in the bunkers and water-ballast chambers near the engine-room, the flanges of some of the angle irons having entirely disappeared and the tie plates being eaten away in holes. This action could be traced directly to the presence of the mill scale, and whether the surface was coated with paint or cement or not, the corrosion was always present upon those plates and angles that had mill scale upon them. The presence of the paint and other coating retarded the corrosion only in a minor degree by preventing the moisture from reaching the surface of the metal.

"In 1882 Mr. Farquharson, on behalf of the Admiralty, conducted a number of experiments to test the action of mill scale upon plates. These experiments were very exhaustive, and the result was to establish beyond dispute that (1) no pitting occurred in mild steel *when freed from mill scale;* (2) that the loss of weight from corrosion of clean *mild* steel and clean iron did not differ much; and (3) that the action of mill scale (Fe^2O^3) is considerable and continuous and *equal to a similar quantity of copper in its corrosive action.* Since these experiments, the Admiralty have never wavered in their practice of causing all their steel plates to be 'pickled' to remove the mill scale, as is done for galvanizing.

Digitized by Google

"A fruitful cause of pitting and corrosion is found in the small particles of slag and carbon which get rolled into the surface of the plate during manufacture. These when brought into contact with salt water readily cause pitting by galvanic action. It is quite usual to see the sides of steel steamers of the merchant marine thickly covered with small rust spots, or rust cones as they are technically called. If these cones are carefully removed and examined, a little pit will be seen containing a particle of black or magnetic oxide that under a layer of paint has been insidiously eating its way into the plate. Had the plate been 'pickled,' all the cinder, slag, and scale would have been dissolved out."

The author here refers to the anti-corrosive paints in use and their non-effective character to prevent corrosion, and goes on to the causes of boiler corrosion in detail, and cites the case of the external corrosion of boilers, viz.:

"Take the case of the bottom of a steamer's boiler, usually placed in close proximity to the bilges. The bilge water will be rich in carbon, due to the amount of coal dust in it, and, the radiant heat from the bottom of the boiler evaporating this water, the evolved moisture with the carbonic acid there formed simultaneously attack the plates (if unprotected) and form a thin layer of ferrous carbonate ($Fe + O + CO_2 = FeCO_3$).

"The ferrous carbonate so formed is at once oxidized by more oxygen and converted into ferric oxide. $2(FeCO_3 + O = Fe^2 O3 + 2CO^2)$. If plenty of moisture be present, as is generally the case, ferric hydrate is formed ($Fe_2O_2 + 3H_2O = Fe_2HO_6$). During the reactions the CO_2 is liberated in the metal and reacts with more oxygen from the air to carry on the process of destruction, which is now further accelerated by the fact that the hydrated oxide on the surface is electro-negative to the metal itself, and excited by the presence of moisture and carbonic acid, creates a galvanic current at the expense of the metal, and the rust being porous, the action continues until all the metal is destroyed.

"Corrosion, like all other forms of chemical action, is much accelerated by increase of temperature, and in the bottoms of ships and boilers the boiler-bearers and bunker plates are in close proximity to the boilers. This has a considerable effect in increasing the rapidity of rusting; also, in the coal bunkers, the contact of moist coal with the plates sets up galvanic action, carbon being electro-negative to the metal. Now, the rusts or oxides of any metal are electro-negative to the metal itself; it therefore requires

Digitized by Google

only the presence of moisture and oxygen to produce electrical action and the corresponding destruction of the plate.

"Variation in temperature affects more particularly the question of the serious and dangerous pitting observable on the sides of furnace plates. In cases where two portions of even the same plate of the iron or steel are subject to unequal temperatures when immersed in a liquid capable of chemically acting upon them, these two portions become virtually two different metals so far as molecular arrangement is concerned, and are capable of forming a voltaic couple. The more highly heated portion, being the most readily acted upon by the sea-water, becomes the positive or corroded element, while the less highly heated portion, being less liable to chemical action, is the negative element. Thus, when through any physical or structural causes one part of a metal plate forming the side of a furnace near the fire bars and parts of the combustion chamber is more highly heated than the other parts, the more highly heated part becomes *positive* to the less heated parts, and concentrates upon itself all the corroding or chemical action which would have diffused itself generally had the temperatures been equal throughout."

The corrosion of boilers from the action of sea-water is very fully entered upon, and the use of some compounds to correct the salinity of sea-water given, viz., "zincara," a compound of zinc and carbonate of soda. The use of anti-corrosive compounds is also recommended, but no particular one specified.

"Mr. D. Phillips, in a paper read before the Institute of Civil Engineers, in 1885, cited the result of an experiment, in which surfaces of bright pieces of plate iron, immersed in cold sea-water for over ten years, have been thoroughly protected from corrosion by the aid of pieces of metallic zinc in metallic contact with the iron; while a similar piece of iron, similarly fitted and immersed, but having a piece of paper placed between the iron and zinc plate, received no protection whatever. The water was changed twice annually, and the oxide removed from the zinc by filing. Under these circumstances the iron became gradually coated with a film of leaden-colored deposit when wet, but hard and white when dry. The effect in other respects was, that on every occasion that the oxide was removed from the zinc and the deposit from the iron specimens, on being returned to the water, small globules formed on the zinc; and on reaching $\frac{1}{10}$ inch in diameter released themselves and flew to the surface.

Digitized by Google

"A leading article in *Engineering*, August 7, 1878, refers to the boilers of the steamship *Hindostan* as follows: 'We found that the zinc-fitted were decidedly cleaner than the other boilers; that is to say, the scale was white and pure, showed no signs of oxidation going on below it, whereas the scale of the boilers which had no zinc showed the usual discoloration of the surface next to the iron plate.

"The proportions necessary to insure complete protection are one square foot of zinc to fifty square feet of heating surface in new boilers, which may be diminished after a time to one in seventy-five or even one in one hundred square feet. Merely placing the zinc in trays, hangers, or strips *will not* insure metallic contact, and the action of zinc to prevent corrosion under such circumstances will be weak and limited. The better and generally recognized method of fixing the zinc is to place a number of studs in the sides of the furnaces and combustion chambers, and to bolt on to their studs the zinc plates, which should be about 10″ x 6″ x 1″. It is important to see that the contact surfaces are clean and bright and the nut screwed close down to the zinc to exclude the water and deposits from the contact surfaces, and thus comparatively insulating them and preventing the galvanic action. Otherwise the zinc is acted upon mostly as a solvent that renders the water innocuous or non-exciting."

The paper is full of interesting data, and worthy a place on the files of those interested in the question how to prevent corrosion in our iron structures. The data in the paper do much to clear up the rival claims of some prominent engineers as to the merit or priority of the invention, or at least the application of zinc in galvanic circuit for the protection of iron and steel surfaces to which it may be connected and electrically excited by the action of the confined or surrounding water. Whether this use was at first in a marine steam-boiler or in the open sea, as applied to the hull of the vessel, or in the bilge-water exposure, is of little moment. The steps between the groups are so short, that the idea or application made to one led necessarily to the other in a very short time.

If the claims of the American be true, that in the year 1845 the use of zinc was tried by him for the protection of the hulls of vessels, one can but wonder what he found therein to protect, unless he applied it to the hackmatack or live-oak timbers for worms; and if incidentally any iron-work that at that date

Digitized by Google

entered into the construction of the ship received protection by means of the application of the zinc, why in the name of the ever-progressive Yankee did he not pursue his advantages and prove himself the benefactor of the age?

A correspondent, W. J. H. Adam,* in *The Practical Engineer*, September 28, 1894, Vol. X., No. 396, p. 248, referring to Mr. C. Ward's paper, *The Corrosion of Steamship Boilers*, gives some interesting data about the use of zinc to prevent corrosion in all types of boilers, by means of an improved "electrogen," now in use on the Allan, Cunard, Bedouin, Forwood, Red Star, McIver, and other important steamship lines, as well as in the French, Chinese, and Japanese navies. These electrogens are fitted to the shells of the boilers by screwed studs, and their action is so efficient that pitting is stopped within a month of their being applied, and boilers which were "bleeding" and red with rust were brought around in two months' time. Boilers with heavy scale, as well as badly corroded, are run for four times the usual periods for opening up and cleaning out, while pitting from the combination of copper fireboxes, brass tubes, and iron shells has been entirely arrested. A marine boiler using eighty pounds of steam, that had been fitted with electrogens for a number of years, and was replaced by a new boiler to work at one hundred and fifty pounds, was found to be in so perfect a condition as to be acceptable by the inspectors for land duty at one hundred and twenty pounds pressure.

Electrogens have displaced "zynkara" in a number of instances, as they prove to be more reliable and steady in action, and do not scar and injure the slide-valve faces and cylinders as chemical compounds containing quantities of soda are very apt to do.

The corrosive effects of mill scale, so forcibly presented in Mr. Ward's paper, but supplements the remarks made upon the same matter in the paper No. 598, June meeting, 1894, before referred to, and confirms the various naval authorities in the stand that they have taken upon the removal of the mill scale from all the plates used in the construction of vessels for the navy, the responsible marine contractors also giving the matter their indorsement by their practice in this respect. So far well, and the screws of experience that have been turned on continually for

* The Glasgow Patents Co., Limited. 11 Bothwell Street, Glasgow.

Digitized by Google

the past fifty years or since the first iron sheeted and framed vessel was laid, have produced an effect; but it will be apparent to any observer at even the most casual visit to any ship-yard that the mill scale question to the ship-builder is a good deal like the temperance question to the politician who is in favor of the law of prohibition, but against its enforcement; else, why not extend the beneficial results to the structural or frame work of the ship, instead of confining their laudable efforts of improvement to the skin portion only?

That a clean, bright covering plate should be riveted to a frame-work of angles, bars, forgings and other connected parts so loaded with mill scale, far in excess of surface and in weight over that of the plate itself, and then expect the salutary effect to extend to the whole structure, is beyond the comprehension of a landsman and needs the educational course at some naval or other school to explain. But it is no less a fact, that in the majority of ship-yards, whether engaged on government or commercial work, little or no attention is paid to this branch of constructive detail by the government or other inspectors, who are in general so heedless or regardless of small things other than as connected with their salary or perquisite account, that even the scale thrown down by the processes of riveting and erecting is seldom removed from the various places of lodgement, unless it be near a hole where it can fall out of itself, but remains to do duty as a prince of corrosion so soon as closed in and the least moisture reaches it, that no subsequent coverings by any paint, cement, or anti-corrosion compound can remedy.

GALVANIZING.

Galvanizing, as a protecting surface for large articles, such as enter into the construction of railway viaducts, bridges, roofs, and ship-work, has not reached the point of appreciation that possibly the near future may award to it. Certain fallacies existed for a long time as to the relative merits of the dry or molten and the wet or electrolytical methods of galvanizing. The latter was found to be too costly and slow, and the results obtained were erratic and not satisfactory, and soon gave place to the dry or molten bath process as in practice at the present day; but the difficulty of management in connection with large baths of molten material, the deterioration of the bath, and other

Digitized by Google

mechanical causes limit the process to articles of comparatively small size and weight.

The electro deposition of zinc has been subject to many patents, and the efforts to introduce it have been lamentable failures in both a mechanical and financial sense. Most authorities recommend a current density of 18 or 20 amperes per square foot of cathode surface, and aqueous solutions of zinc sulphate, acetate or chloride, ammonia chloride or tartrate, as being the most suitable for deposition.

Herman's process has been experimented with on a commercial scale, the chief feature being the addition of the sulphates of the alkalies or alkali earth to a weak solution of zinc phosphate.

Electrolytes made by adding caustic potash or soda to a suitable zinc salt have been found to be unworkable in practice, on account of the formation of an insoluble zinc oxide on the surface of the anode, and the resultant increased electrical resistance; the electrolytes are also constantly getting out of order, as more metal is taken out of the solution than could possibly be dissolved from the anodes by the chemicals set free, on account of this insoluble scale or furring up of the anodes, which sometimes reaches $\frac{1}{8}$ inch in thickness. Fig. 124 shows an anode thus coated.

To all intents and purposes the deposits obtained from acid solutions under favorable circumstances are fairly adhesive when *great care* has been exercised to thoroughly scale and clean the surface to be coated, and which is found to be the principal difficulty in the application of any electro-chemical process for copper, lead, or tin, as well as for zinc, and that renders even the application of paint or other brush compounds so futile unless honestly complied with. Unfortunately, these acid zinc coatings are of a transitory nature, their durability being incomparable with *hot galvanizing*, as the deposit is porous and retains some of the acid salts which cause a wasting of the zinc and consequently the rusting of the iron or steel. Castings coated with acid zinc, rust comparatively quickly, even when the porosity has been reduced by oxidation, aggravated no doubt by some of the corroding agents, sal-ammoniac, for instance, being forced into the pores of the metal.

The relative porosity of zinc coating, applied by different methods, is shown by the following micrographs, Figs. 122 and 123, taken from *The Engineer*, September 28, 1894, and to which

Digitized by Google

I am indebted for some selections upon this subject, as well as for the tables, Figs. 125, 126, 127, given.

Other matters of serious moment in the acid electro-zincing process, aside from the slowness of operation, were the uncertain nature, thickness, and extent of the coating on articles of irregular shape, and the formation of loose dark-colored patches on the works, the unhealthy non-metallic look, and want of brilliancy and lustre, prevented engineers and the trade from accepting the process or its results except for the commoner articles of use.

The Cowper-Coles process of electro-zincing articles claims to overcome all these difficulties, and plants are in process of erection

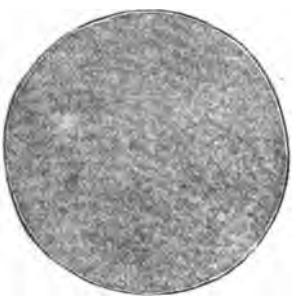

FIG. 122.—Zinc Coating Applied by Hot Galvanizing Process, Magnified Five Diameters.

FIG. 123.—Deposit from Zinc Sulphate Solution (Acid), Magnified Five Diameters.

with a bath of some 14,100 gallons capacity, capable of turning out forty tons of light work per week, and in which it is proposed to treat the plates of vessels sixty feet in length upon one or both sides, and the frames of such vessels as torpedo-boat destroyers and kindred craft after riveting up. These plates and frames are given a thin coating of zinc by this process that appears to be perfectly uniform in character and extent whatever the shape of the piece may be, and however numerous the lugs, flanges, mortises, or core holes, and is called "zinc-flashing"; that is, coating the iron or steel article after pickling and cleaning with a thin coat of zinc about one ounce per square foot of surface, which resists the inclemency of the weather and mechanical injury as well as a thicker coat, and is found to afford sufficient protection in most cases, and is adequate protection until such time as it is ready to receive the usual paint coatings.

To obviate any tendency of the paint to peel off from the zinc surfaces as it generally manifests a disposition to do, it is recom-

Digitized by Google

mended to coat all the zinc surfaces, previous to painting them, with the following compound: One part chloride of copper; one part nitrate of copper; one part sal-ammoniac, dissolved in sixty-one parts water, and then add one part commercial hydrochloric acid. When the zinc is brushed over with this mixture, it oxidizes the surface, turns black, and dries in from twelve to twenty-four hours,

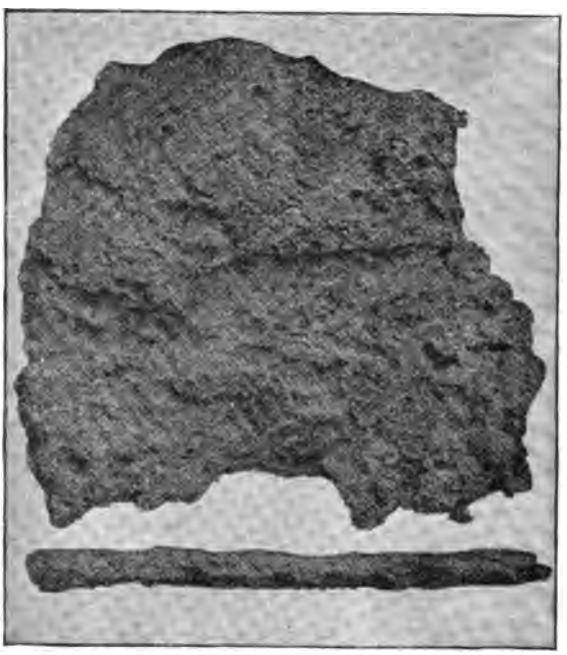

FIG. 124.

and may then be painted over without danger of peeling. Another and more quickly applied coating consists of bichloride of platinum, one part dissolved in ten parts distilled water and applied either by a brush or sponge. It oxidizes at once, turns black, and resists the weak acids, rain, and the elements generally.

Zinc surfaces, after a brief exposure to the air, become coated with a thin film of oxide—insoluble in water—which adheres tenaciously, forming a protective coating to the underlying zinc. So long as the zinc surface remains intact, the underlying metal is protected from corrosive action, but a mechanical or other injury to the zinc coating, that exposes the metal beneath in the presence of moisture, causes a very rapid corrosion to be inau-

Digitized by Google

gurated, the galvanic action being changed from the zinc positive to zinc negative, and the iron as the positive element in the circuit is corroded instead of the zinc.

When galvanized iron is immersed in a corrosive liquid, the zinc is attacked in preference to the iron, provided both the exposed parts of the iron and the protected parts are immersed in the liquid. The zinc has not the same protective quality when the liquid is sprinkled over the surface and remains in isolated drops. Sea-air being charged with saline matters is very destructive to

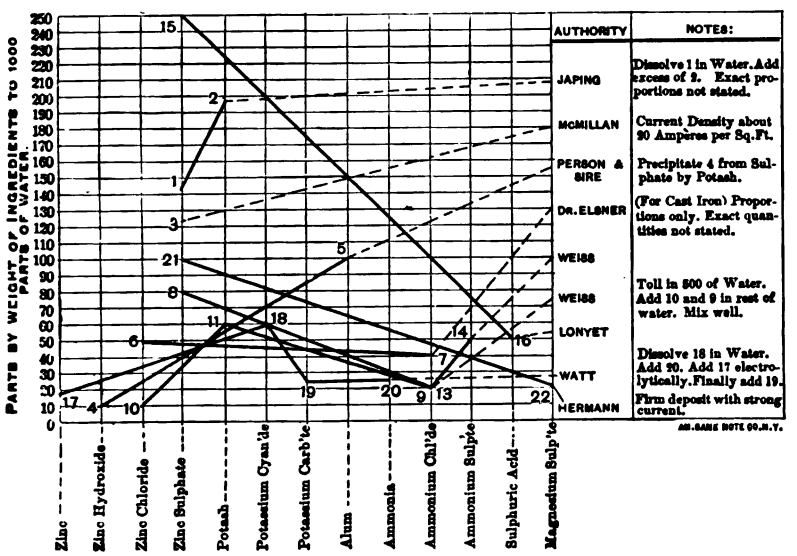

FIG. 125.—ZINCING SOLUTIONS RECOMMENDED BY VARIOUS AUTHORITIES.

galvanized surfaces, forming a soluble chloride by its action. As zinc is one of the metals most readily attacked by acids, ordinary galvanized iron is not suitable for positions where it is to be much exposed to an atmosphere charged with acids sent into the air by some manufactories, or to the sulphuric acid fumes found in the products of combustion of rolling mills, iron, glass, and gas works, etc.; and yet we see engineers of note, covering in important buildings with corrugated and other sheets of iron and using galvanized iron tie rods, angles, and other construction shapes, in blind confidence of the protective power of the zinc coating; else in supreme indifference as to the future consequences and catastrophes that arise from their unexpected failure.

Digitized by Google

The comparative inertia of lead to the chemical action of many acids has led to the contention that it should form as good if not a better protection to iron than zinc, but in practice it is found to be deficient as a protective coating against corrosion. A piece of lead-coated iron or terne plate placed in water will show decided evidences of corrosion in twenty-four hours. This is to be attributed to the porous nature of the coating, whether it is applied by the hot or wet (acid) process. The lead does not bond to the plate as well as either of the other metals, zinc, tin, copper, or any alloys of them. The usual weight of lead-coated terne plates is about ¾ ounce to a square foot, while hot-process zinc coatings weigh from 1½ ounces minimum to 3 ounces maximum, depending upon the temperature of the bath, and the slowness of removal therefrom giving time for the article to drain off. The following table gives the increase in weight of different articles due to hot galvanizing:

Description of article.	Weight of zinc per square foot.	Percentage of increase of weight.
Thin sheet iron = .026 inch No. 22 B. W. G...	1.196 oz.	18.2
$\frac{1}{16}$ inch plates.....	1.76 "	2.0
4 inch cut nails.....	2.19 "	6.72
¾ inch dia. bolt and nut.....	approximately 1.206 oz.	1.00

Tin is often added to the hot bath for the purpose of obtaining a smoother surface and larger spangles or facets, but it is found to shorten the life of the protective coating considerably.

A portion of a zinc coating applied by the hot process was found to be very brittle, breaking when attempts were made to bend it; the average thickness of the coating was .015 of an inch.

An analysis gave the following result:

Tin.....	2.20
Iron	3.78
Arsenic.....	Trace
Zinc (by difference).....	94.02

A small quantity of iron is dissolved from all the articles placed in the molten zinc bath; and a dross is formed amounting in many cases to twenty-five per cent. of the whole amount of zinc used. This zinc-iron alloy is very brittle and contains by analysis six pe cent. of iron, and is used to cast small art ornaments from.

Digitized by Google

A hot galvanizing plant having a bath capacity of ten feet by four feet by four feet six inches outside dimensions, and about one inch in thickness, will cost $625 and will hold twenty-eight long tons of zinc, which at four cents per pound will require $2,500 to fill it; the heating of this mass of metal and its ever-changing cold immersions, with the waste by dross and extra thickness in spots is a constant source of annoyance and expense.

The cost of an electro-chemical or wet bath Cowper-Coles plant of 6,700 gallons bath, size thirty feet by six feet by seven feet, will be but slightly more than the hot bath given. There is no dross formed by the use of the Cowper-Coles process, and the zinc coating formed is said to resist the corroding action of a saturated solution of copper sulphate—English Post Office test for telegraph wire, much better than hot galvanized iron wire, as per following table:

RESULT OF PROCESS TEST MADE ON SAMPLES OF CHARCOAL IRON WIRE COATED WITH ZINC BY VARIOUS PROCESSES.

Process used to test the iron.	Grains of zinc per square ft.	Ounces per square ft.	Number of one-minute dips; samples stood without showing metallic copper.
Hot galvanized	648.5	1.48	3
Acid bath $ZnSO_4$	446.4	1.02	4
Cowper-Coles process	552.64	1.26	5

A Cowper-Coles process bath of a capacity of about 4,000 gallons will treat ship plates 18 feet long, and will require an electrical energy of 2,000 amperes of 5-volt electro-motive force.

With equal amounts of zinc per unit of area, the zinc coating put on by the cold process is more resistant to the corroding action of a saturated solution of copper sulphate than is the case with steel coated by the ordinary hot galvanizing process; or, to put it in another form, articles coated by the cold process should have an equally long life under the same conditions of exposure that hot galvanized articles are exposed to, and with less zinc than would be necessary in the ordinary hot process.

The hardness of a zinc surface is a matter of some importance. With this object in view, aluminium has been added from a separate crucible to the molten zinc at the moment of dipping the article to be zinced, so as to form a compound surface of zinco-aluminium, and to reduce the ashes formed from the protect-

Digitized by Google

ive coverings of sal-ammoniac, fat, glycerine, etc. The addition of the aluminium also reduces the thickness of the coating applied.

Cold and hot galvanized plates appear to stand abrasion equally well. The thickness of the coating being the same, tests by means of the Schlerometer show: cold galvanized sheet, 6.;

TABLE GIVING THICKNESS OF ZINC REQUIRED TO WITHSTAND VARYING NUMBER OF IMMERSIONS IN A SOLUTION OF COPPER SULPHATE.

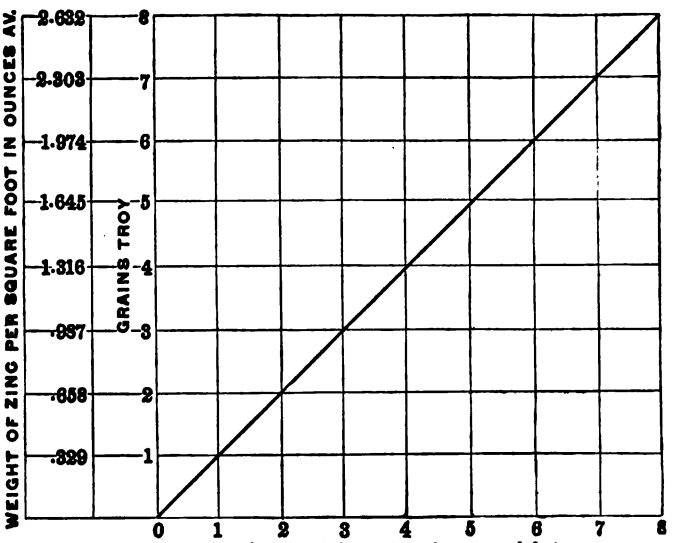

FIG. 126.

hot galvanized sheet, 6.; terne plate, 2.; tin plate, 2. The figures represent the load in grammes upon a diamond point, just sufficient to cause it to scratch the specimen.

The attempts to electro-zinc iron and steel wire for wire standing rigging, bridge, or other cables have not been successful; it has not been found practical to produce a wire capable of withstanding more than one immersion in a copper sulphate solution.

Both pickling and hot galvanizing reduce the strength, distort and render brittle iron and steel wires of small sections. Zinc fuses at 775° F., and the bath is usually kept at about 1,000° F. Steel wire of high breaking strain has its hardness, and consequently its ultimate tensile strength and elongational efficiency,

Digitized by Google

reduced by drawing of the temper and the formation of an iron zinc alloy on the surface of the wire, by as much as from 5 to 10 per cent. It is the practice when coating steel wire to keep the bath at as low heat as possible and to run the wire through it at a high rate of speed. Both these operations lead to a waste of zinc by reason of the rapid solidification of the metal on the comparatively cold wire, and consequently the ready breaking or cracking-off of the covering metal on bending or twisting it, owing to the difficulty with which molten zinc adheres to the steel except after long contact in the bath. In some cases the wire is wiped between asbestos rubbers as it leaves the bath, but wire thus treated is found to resist corrosion but a very short time.

The English manufacturers have ceased galvanizing their high grade steel wire that costs some $175 per ton, on account of the great risk of rendering it worthless, which is clearly a disadvantage, although the advisability of protecting the steel is unquestionable, as corrosion is found to be very marked on the inner strands of ropes or cables formed from uncoated wires.

The Cowper-Coles or cold galvanizing process is in operation at the works of Messrs. Laird Bros., Birkenhead, Eng., and used for the purpose of zincing the skin plates and frames of the torpedo boats and torpedo-boat destroyers built by them for the English navy. A plan and elevation of this plant is given in *The Engineer*, Feb. 28, 1894. No detail of the cost of working the process, as applied to armor skin plates, frames, or other heavy articles, is given. The cost must necessarily be less than electro-plating with copper as given by the Tacony people in the preceding paper (No. 598, Vol. XV., 1894), not only in regard to the difference in cost of two metals used, but also the electromotive force required, the cleaning of the plates from mill scale and the dirt of machining processes being an indispensable condition in this process as in all other preservative methods. Figs. 125, 126, 127, are tables accompanying the article in *The Engineer* referred to, and present some of the data given therein in a form convenient for comparison.

The industrial importance of the successful application of this cold galvanizing process can hardly be over-estimated, even if its application is only to the marine constructions of the future, and it is found to be in any degree inapplicable to those of the past, and that constitute our present structures and vessels in

Digitized by Google

use. The permanency, continuity, strength, and density of the coating given by this process being found in all respects equal to that of hot galvanizing, the thickness of it can be made superior to that given by the hot. Considering the success that has attended the use of zinc to prevent corrosion in marine boilers with concentrated hot saline fluids as the excitant medium, aided by the electrical conditions attendant upon the combustion of large quantities of fuel, and the changes in temperatures in various parts of the same boiler or group of connected boilers, all of which conditions are conducive to galvanic action, it may not be considered a wild prophecy to expect that, with all of the

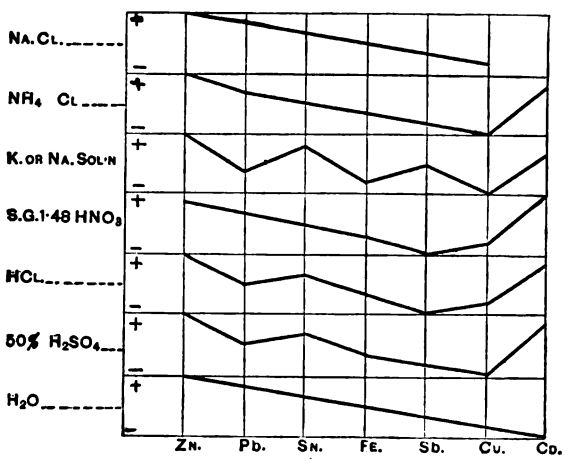

FIG. 127.—DIAGRAM OF ELECTRO-CHEMICAL RELATIONS OF METALS IN VARIOUS SOLUTIONS.

internal metallic parts of a steam vessel protected by zincing, and by virtue of the constructive features in close contact with each other, and the bilge-water spaces filled with a corrosive liquid ready to act upon any immersed metal electro-positive to the metal forming the ship, that an application of zinc plates secured to the framework of the structure similar to the application of zinc to marine boilers, that these plates may receive the energy of corrosion and, if not neutralizing it entirely, at least pass it along in the form of a deposit upon the submerged portions of the vessel or to convenient pockets where it could be removed, the same as is now done to the washings and dirt from the fire-room bunkers and ballast chambers.

Digitized by Google

This internal electro-chemical process of protection does not appear so chimerical as at first one might suppose. Dr. Henry Wurtz * has proposed the protection of mining-plants subject to the intensified corrosion due to the decomposition of pyrites and other minerals in the mine waters, by connecting all of the metal portions of the mine as the negative elements with a dynamo of sufficient force to overcome the strength of galvanic energy due to the surfaces exposed excited by the corrosive liquids in the mine, the positive terminal to be connected to a mass of hard coke in the mine sump: conditions varying but slightly from those existing in the ship, and it is not improbable that experiment will determine that both these systems could be made to work together.

Thermo-electric currents arise from changes of temperatures in all bodies, and set up voltaic action in all cavities, fissures, seams, and contact surfaces in the metal, which, though slight and not easily detected, will in time enlarge and waste them away sufficiently to sap the strength of the mass.

Metallic salts and acids in mine-waters intensify the corrosion of all metals exposed to their action either by direct contact or immersion or by condensation of the vapors in the mine. The metal work of railway tunnels is also disastrously affected by the condensed vapors of sulphur, carbonic acid, and the ever-present moisture due to such locations, the corrosion of the metals decreasing the resistance of the water to voltaic circuits: this corrosion by liquids being voltaic phenomena in all cases, and in many cases is intensified by the moisture being in the form of drops instead of being uniformly spread over the whole surface.

The cut (Fig. 128), reproduced from the *Railroad Gazette*, November 23, 1894, page 801, represents a section of a seventy-six-pound tee-rail laid in the Musconetcong Tunnel, and removed after being laid five years, having lost more weight by corrosion than wear. The dotted lines show the original size of the rail, and the full lines its present worn and corroded size, being very marked. The rails were removed on account of the strength of the rail having been seriously affected by the corrosion. The tunnel is very damp, and a great deal of sand is used by the engines, which has kept the base of the rail covered, the vibration caused

* *Engineering Magazine*, May, 1894, Vol. VII., No. 3, page 297, "Preservation of Metals from Corrosion by Electric Polarization."

Digitized by Google

on the passage of the train having a tendency to remove the thin scale of rust almost as rapidly as it could be formed under a favorable condition. There was but little apparent difference in the corrosion, whether between the cross-ties or where the rail rested upon them.

In the St. Gothard Tunnel, 49,168 feet long, the air remains almost motionless for twelve hours per day, and though the accumulation of carbonic acid is rapid, and a part of it is absorbed by the great quantity of water present, the air is almost unrespirable and causes a great deal of distress to the workmen, and the corrosion of all metal work inside the tunnel is very rapid.

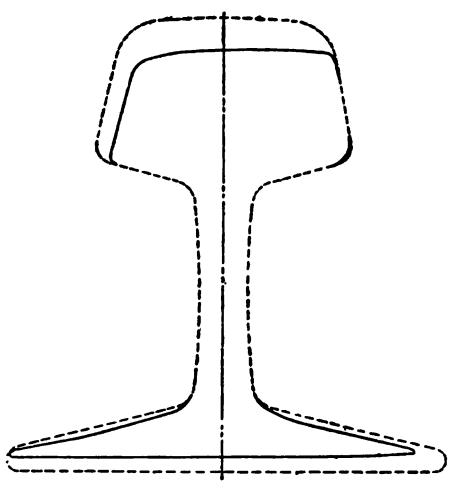

FIG. 128.

In the Arlberg Tunnel, 33,587 feet long, the corrosion of metals is very rapid. All the metal work was renewed after ten years.

In the new Simplon Tunnel, 64,718 feet long, forced ventilation is proposed, requiring over 500 horse-power to maintain it at the ventilator shaft, with the fans working at an effective duty of 65 per cent., 1,760 cubic feet of air per second being required for ventilation.

With these facts before us, it may be a pertinent question to ask, how long will the metal lining of some of our important submarine tunnels last? notably that of the unfinished Hudson River Tunnel, where the continuity of the brick lining is wholly dependent upon that of the outside metal work, and where the probable effect of the passage of a railway train will be to set up an undulating movement of the whole tube resting in its bed of soft salt mud.

The change of cast iron, when sunk in the sea, to plumbago, has been ascertained to be at a rate approximating six inches in one hundred years, in the case of tough, close-grained, cannon metal.

The lining plates of most tunnel work are less than three inches

Digitized by Google

in thickness. Conclusions as to the safety of these marine constructions for passenger transportation can be easily drawn, and when the inevitable catastrophe comes it will be sheer luck if the Tay Bridge disaster is not repeated on a larger scale, with a kindred report from the coroner's jury, "All went in, but none came out, and we have nothing to sit upon."

Acids and acid salts, which are capable of taking up iron oxides into solution, still further enhance the destruction by removing such oxides and exposing the surfaces of the metal to a fresh attack of the corrosive element; but the saline matter in solution that exalts voltaic action need not be acid. Any *neutral* salt which decreases the resistance of the water will qualify it to act as the necessary liquid medium of a voltaic circuit. Sea-salt is the commonest of all such neutral salts, together with the other chlorides and sulphates of sea-water. It enables corroding voltaic action to be set up on all ferric bodies immersed therein or in the air impregnated with their substance.

The Journal of the Society of Chemical Industry (London), February 28, details some experiments upon the galvanic action of sea-water upon iron and steel structures in various relations with each other, as constructive parts of trusses, boilers, etc., to prevent the corrosion of which the use of zinc and other easily oxidized metals and alloys are suggested, and to be so placed and connected to the structure that they will form the electro-positive element of the ever-present galvanic circuit, and by their decomposition protect the structure, or at least aid the paint-coating in its mission of protection.

These protective features, proposed for the internal parts of a ship, do not apply to the protection of the external surfaces, where an entirely new set of conditions are in force, owing to the numerous rivets employed to hold the plates together and to the frames, and which are necessarily unprotected from the many sources of corrosion herein mentioned, excep so far as the paint coatings may protect them. The means taken for the preservation of the external surfaces will be considered further on; meantime it may be well to consider as many of the difficulties that have to be met as possible.

Mr. Thomas Andrews, F. R. S. S. L. and E., M. Inst. C. E., late experiments reported to the British Institution of Civil Engineers, accompanied by an elaborate record of tests, in summarizing his work on *The Effect of Stress on the Corrosion of Metals*, states his

Digitized by Google

conclusions that wrought iron and various steels, when exposed singly and separately, without liability to galvanic action other than local, under the action of sea-water for long periods, showed a greater corrosion on the part of all the steels than the wrought iron, the advantage in favor of the iron compared with the steels amounting to twenty-five per cent. and upward. It was also noticed that corrosion was increased in the steels in proportion as the percentage of combined carbon was greater.

Abstracts from this paper are published in the *Iron Age,* October 25, 1894, Vol. LIV., No. 17, pp. 710, also in *The Practical Engineer* (London), October 12, 1894, Vol, X., No. 398, pp. 271. The paper in full is published in *Proceedings of the Institution of Civil Engineers* (English), Vol. CXVIII., 1893–4, Part IV., pp. 356–374, in which reference is made to a paper on the same subject in the *Minutes of Proceedings Inst. C. E.* (English), Vol. LXXXVII., pp. 340; and Vol. XCIV., pp. 180, and Vol. CV., pp. 161.

"It has also been found that the galvanic action between wrought iron and steels induced a largely increased corrosion in the several metals. It was also found that the upper and lower portions of a metal structure, or vessel, although composed throughout of the same metal, were exposed to electrolytic disintegration from the galvanic action set up by solutions of different salinity on the metal, conditions found almost constant in tidal streams, brought about by the gradual rise and inflow of salt water and the outward flow of fresh water; and there are strong evidences to show that magnetic influence tends to increase the corrosion of steel.

"The recorded experiments afford the additional information that the corrosion of metals is considerably affected by stress, varying according to the nature and extent of the applied strain. It might be supposed that metals under stress would be more liable to increased corrosion than when in their normal state; the experiments, however, indicate the opposite conclusion—that is, when 'strained' is considered separately from 'unstrained' metal. When, however, the strained metal is in galvanic circuit or combination with the unstrained metal in any solution, an increased total corrosion ensues from the galvanic action, which research has shown to arise consequent on the different potential between the two.

" The reason why the mere fact of a metal having been strained reduces its corrosibility, compared with the same metal in its

Digitized by Google

normal unstrained condition, will be found in the results of the experimental research, which demonstrated that stress, whether tensile, flexional, torsional, or of any other kind, considerably alters the physical properties of both iron and steel, by increasing their rigidity and rendering the metals harder, also greatly reducing their properties of elongation or ductility. It requires a higher tonnage to break a strained than an unstrained bar of the same metal. A tensile stress applied to a wrought iron shaft, that produces an elongation of only two per cent., increases the tensile resistance of the metal 2.66 per cent.

"From the observations, it was manifest that the stresses applied to metals examined for corrosion altered their structure, rendered them harder in nature, and less liable while in their strained condition to be acted upon by sea-water, or other waters, than in their ordinary normal or softer condition. The experiments, however, indicate that an *increased total corrosion*, in excess of the normal corrosibility of the metal, occurs in a metallic bridge, vessel, boiler, or other structure, from the action of the *local* galvanic currents which are shown to be induced between 'strained' and 'unstrained' portions of even the same piece of iron or steel forging, bar, or plate. Hence a strain occurring in a metallic structure tends, *owing to the local* galvanic action thus set up, to increase any corrosive forces which may be deteriorating the metal of which it is composed."

From *The Practical Engineer*, October 12, 1894, Vol. X., No. 398, page 271, "Effect of Stress on Corrosion of Metals," referring to Mr. Thomas Andrews', F.R.S., experiments on this subject, and a paper presented by him in the *Proceedings* of the Institution of Civil Engineers, 1892, Vol. CXIII., 1893-4, p. 363:

"The details of the experiments are full of interest. Pieces of iron and mild steel of known character were submitted to tension, torsion, and flexure strains, to ascertain the changes made in the metal, and if corrosive effects were in any manner due to stress. For tension, a bar was strained in a testing machine until an elongation was produced of 23 per cent. in three inches, and at the point of reduced area the bar was cut in two.

"The halves were then turned in the lathe down at the shackle or vise end, where they had been subjected to little or no stress, until they had an area equal to the end half at the point where contraction of area had occurred, both pieces being finished

Digitized by Google

exactly similar, and each piece represented a section of strained and unstrained metal. They were then placed at the same depth in a saturated solution of common salt to approximate the action of sea-water on metal, the immersed ends representing strained and unstrained metal. An electrical contact made between the two pieces of metal, through the medium of a delicate galvanometer (Thomson's), the difference in potential or corrosibility could be observed. It was found that in each case a sensible current was set up between the two halves of the specimen; the unstrained portion was in every case found to be the electro-positive element of the pair, corresponding to the zinc in a galvanic couple, indicating clearly that the 'unstrained' metal was acted upon more rapidly by the solution, and thus more easily corroded than the 'strained' metal.

"The test made with specimens after being submitted to torsional stress, representing a bar that had been twisted through an angle equal to half a revolution, and prepared similar to those in the tensile test, showed results identical with the tensile strains. In every instance the 'unstrained' metal was the electro-positive element, and was corroded more rapidly by the sea-water.

"This conclusion was further supported by tests made with iron and steel plates, when a flat piece was compared with one bent into an U or semicircular trough; the bent plate in each case proving to be the one least easily acted upon by the solution."

The experiments throw an interesting light on a subject which has hardly received the attention it deserves, and helps to explain some of the peculiarities in connection with the wasting of certain structures that have been involved in considerable mystery. The metals operated upon by Mr. Andrews were large, rolled wrought-iron bars and hammered wrought-iron shafts; Bessemer steel and Siemens steel forged shafts; also, large bars of soft and hard Bessemer and Siemens steels; soft and hard cast-steel, and steels made from each of the metals aluminium, nickel, silicon, and copper. Experiments were also made on *rolled* plates of wrought-iron, soft Bessemer, and soft and hard Siemens steel and soft cast-iron. The chemical compositions and general physical properties, etc., of all the metals are given and tabulated. All the metals experimented upon were perfectly bright.

"General results: 'The average electro-motive force obtained

Digitized by Google

between strained and unstrained portions of the same metal' were:

"Wrought iron forged shafts	0.016 volts.
Soft Bessemer steel "	0.019 "
Hard " " "	0.006 "
Soft cast steel	0.003 "
Hard " "	0.003 "
Silicon steel	0.004 "
Aluminium steel	0.004 "
Nickel steel	0.003 "
Rolled wrought iron bars	0.002 "
Soft Siemens steel	0.005 "
Hard " "	0.005 "
Copper steel	0.006 "
Chromium steel	0.001 "
Bessemer steel hammered forgings	0.011 "
Siemens steel " "	0.006 "

"With cold-drawn small steel rods in galvanic circuit with copper rods, similar results were noted, the electro-motive force between strained and unstrained aluminium steel being 0.022 volts, and strained and unstrained cast steel being 0.023 volts.

"In all these tests the *unstrained* metal was the electro-positive. In the torsional tests the electro-motive force was notably higher than in the tensile, also in the flexure, tests.

"These electric measurements ought, perhaps, to be regarded as tentative indications, establishing a general principle, rather than as an absolute measurement for the purpose of accurate comparison of the behavior of the various metals. The chemical analysis of all the metals was made prior to straining them. These experiments extended from a few seconds to over ten days, in which it was observed that the difference in the electro-motive force between strained and unstrained metal steadily declined from the initial amount, but was in no case extinguished."

Valuable contributions to a knowledge of the phenomena attending the corrosion of metals have recently been made by a number of eminent metallurgists and electro-chemists. Among the papers of interest I refer to*.

---

* *Transactions* Institution of Marine Engineers (English), May 13, 1890. *Minutes of Proceedings* Civil Engineers (English), Vol. LXXVII., p. 323, and Vol. LXXXII., p. 281.

"Electro-Chemical Effects on Magnetising Iron." *Proceedings* Royal Society,

Digitized by Google

The recorded experiments* as to the superior durability of cast-iron as compared with wrought-iron, when exposed constantly to the action of sea-water, appear to be somewhat conflicting.

"Mr. G. Rennie's experiments in 1836, on 1-inch cubes of wrought-iron, cast-iron, and bronze, with reference to their eligibility for light-house purposes. The cubes being previously weighed, were plunged into a saline solution considerably stronger than sea-water, viz.:

Muriate of soda.....	122	grains	Dissolved in 10½ ounces of Thames water.
Muriate of magnesia.....	25	"	
Muriate of lime.....	6	"	
Sulphate of soda.....	30	"	
	183		

"The cubes were taken out of the water after being immersed 70 hours in separate vessels. The cast-iron was found to have lost $\frac{1}{3307}$ part of its weight. The wrought-iron had lost $\frac{1}{6610}$ of its weight, being in the proportion of 2 of cast-iron to 1 of wrought, while the bronze had only lost $\frac{1}{10000}$ of its weight, or a result in favor of the bronze over cast-iron as 3 to 1."

"The cast and wrought-iron cubes, being again accurately weighed, were again placed in a strong solution of 1 measure of muriatic acid to 25 measures of Thames water, when, after remaining 21 hours, the cast-iron cube had lost $\frac{1}{33}$ of its weight, and the wrought-iron only $\frac{1}{268}$ of its weight, being in the proportion of 8 to 1 in favor of wrought-iron."

"Mr. R. Mallett, M.I.C.E., experimented on specimens of wrought and cast-iron sunk in the sea; showed that the amount of corrosion decreased with the thickness of the metal, and that from $\frac{1}{10}$ to $\frac{4}{10}$ inch in castings 1 inch thick, and about $\frac{6}{10}$ inch of wrought-iron, will be destroyed in a century in clear salt water. This is equal to 1.5 to 1 in favor of cast-iron. Mr. Mallett's ex-

---

Vol. XIII., p. 429; Vol. XLIV., p. 152; Vol. XLIV., p. 176; and Vol. LII., p. 114.

"On the Corrosion of Metals in Sea-water." *Minutes of Proceedings* Institution of Civil Engineers (English), Vol. XLXVII., p. 323, and Vol. LXXII., p. 281.

"The Action of Tidal Streams on Metals." *Proceedings* Federated Institution of Marine Engineers, Vol. I., pp. 191. 1890.

Report of the meeting of the British Association for the Advancement of Science, Edinburgh, 1892.

"The Wasting and Protection of Iron in Sea-water."

From "Notes on Docks and Dock Construction," by C. Colson, M. Inst. C.E.

* *The Practical Engineer*, London, October 19, 1893. Vol. X., No. 399, p. 307.

Digitized by Google

periments, made at Dublin, showed that cast-iron, freely exposed to the weather and all of its atmospheric precipitations, was corroded nearly as fast as if in clear sea-water, the specimens being unprotected in both cases."

On the whole, it may be considered conclusive that cast-iron is less liable to corrosion than wrought-iron when immersed in sea-water, or in locations where the air is charged with sea-vapors. This is probably due to the surface of the cast-iron being covered with a skin of silicate of protoxide of iron, produced by the molten metal fusing the sand in the mould, as well as to the film of magnetic oxide of iron formed at the same time by oxidation of the hot metal.

Iron exposed to tidal wash, and alternately wet and dry, is more liable to rapid waste, unless well protected, than when wholly immersed in water or wholly exposed in the air.

Corrosion is accelerated by impurities in the water, and especially by the presence of decomposing organic matters or free acids, and chlorines discharged from many manufacturing establishments, rolling mills, blast furnaces, paper mills, bleacheries, etc. It is also accelerated by contact with any other metal or substance that is electro-negative to the iron, or where two masses of the metal are in different conditions as to density or temperature. In general, hard, crystalline iron, whether cast or wrought, is less corrosive than ductile, soft, and fibrous qualities.

Examination of the iron piles in the South Bassein bridge on the Bombay, Baroda and Central India Railway led to the conclusion that the greatest corrosion in cast-iron piles exists close to the low-water mark, and does not extend to any considerable depth below it, a conclusion which also applies to bolts and braces. After an exposure of 25 years the piles were found in very good condition, and corrosion had only occurred in places easily accessible for renewals and repairs. A thin coating of mud, marine growth, and barnacles, by which the surfaces of immersed iron piles and pier work are protected from contact with fresh supplies of water, has a tendency to retard corrosion; but when these growths are removed, corrosion is increased at once.

Mr. Kinniple remarks "that after a life of from thirty to fifty years, structures depending upon cast-iron exposed to the rapidly oxidizing action of sea-water can only be looked upon as of a comparatively temporary character, especially as regards very light cast-iron pile structures."

Digitized by Google

An instance of the effect of stress in metal to induce corrosion is shown in the cut and record, *Transactions* A. S. M. E., Vol. XV., 1894, paper No. DXCVIII., p. 1035, copied from *Engineering*, and reproduced here to illustrate this corrosive action. The cut represents a piece of a bar of wrought-iron broken in testing, and then laid aside for a number of months, when the effects of the strain to which the piece had been subjected developed themselves as shown.

As has been pointed out, in all processes of corrosion carbonic

FIG. 129.

acid gas and moisture play an important part, the iron or steel uniting with the carbonic acid and oxygen of the water to form ferrous carbonate, while the hydrogen is set free; and that the ferrous carbonate then takes up oxygen from the water or atmosphere, is decomposed into ferric oxide (rust, Fe_2O_3) and carbonic acid, which, being liberated in actual contact with the moist surface of the metal, carries on the process of "rusting" which generally precedes fouling on exposed metal surfaces in either air or fresh water.

This view of the case has been confirmed by many chemists, and particularly by Prof. Crum. Brown, in a paper presented at the autumn, 1888, meeting of the Iron and Steel Institute at Edinburgh; but the rusting of the metal in sea-water has by many chemists been ascribed to a more complex action, in which the salt

Digitized by Google

present plays an important part by first forming oxychloride of iron. Later investigations do not, however, bear out this hypothesis. When iron filings or turnings are exposed to the action of sea-water, hydrogen gas is evolved and ferrous oxide and carbonate are formed, and this changes, as in air or fresh water, into ferric oxide, by taking up oxygen present in the water. The fact that a few drops of alkali added to the solution stopped the corrosion, which would not have been the case had oxychloride of iron been present, determines that the simple rusting of ferric bodies in sea-water is due to the same cause as in fresh—*i.e.*, the decomposition of the water by the iron in the presence of carbonic acid.

The saline constituents of sea-water, however, do undoubtedly play an important part in a more active form of corrosion by helping to excite galvanic action between the iron in the plates and any foreign metal or impurities present, an action which is also materially aided by want of homogeneity in the metal, by particles of rust, by mill scale, by wrought and cast iron or steel in contact with each other, or even by the different amount of work, such as hammering or bending, undergone by different parts of the same plate, and in all of these cases the galvanic action set up causes rapid oxidation of the iron at the expense of the oxygen of the water, hydrogen being evolved.

It may be therefore considered that on the skin of a ship two processes of rusting are going on, the simple corrosion on exposed surfaces of the metal, due to the presence of moisture, carbonic acid, and free oxygen, which forms a fairly uniform coating of rust on the metal; and the more local corrosion due to galvanic action, which results in pitting and uneven eating away of the plates.

Rust cones are due to the most local form of galvanic action, caused by the presence of a speck of deposited copper, lead, or other foreign metal, or even a small particle of rust or mill scale left on the surface of the iron and covered by the compositions used as protectives and anti-foulers. As soon as the sea-water penetrates to them, galvanic action is set up, water is decomposed, rust formed, and the escaping hydrogen pushes up the composition, forming a blister; the hydrogen leaks out, the water leaks in, the action becomes more and more rapid, and the blister gradually filling with the result of the action—rust. The blister bursts, but the cone of rust has by this time set fairly hard, and continues to

Digitized by Google

grow from the base, the layers of rust being perfectly visible in a well-formed cone; and when the rust cone is detached, the pitting of the metal at the base of the cone is, as a rule, found to be of considerable depth.

The speck of foreign matter which has caused this destructive action generally clings to the surface of the iron, and, being at the bottom of the pitting, escapes detection and removal; and when the vessel, newly coated with fresh compositions, again goes to sea, the corrosion will again probably be set up in the same spot.

The corrosion of the plates in the interior of a vessel is a subject quite equal in importance to the external action of sea-water and dissolved gases on the metal; and from the fact that certain portions of the interior plates, from their position, escape the frequent examination and attention bestowed upon the exterior, it becomes a still greater source of danger.

Corrosion, like all other forms of chemical action, is much accelerated by increase of temperature; and on the bottom of a ship, near the furnace room and boilers, this has a considerable effect in increasing rapidity of rusting. Also in the coal bunkers, the mere contact of moist coal with iron plates sets up galvanic action, carbon being electro-negative to iron, and the coal dust which sifts down into the double bottom lends its aid to the destruction of the plates; while if the coal contains any "pyrites," which is nearly always the case, then double sulphides of iron and copper are gradually oxidized into soluble sulphates of the metals, and these, washing down into the bilge-water, would at once cause most serious corrosion should they come in contact with any bare portion of the plates. Repairs to any portion of the inside plates will loosen rust and mill scale, which, finding its way into the bottom, tends to set up galvanic action; while the scale of oxide of copper from copper and brass fittings and pipes is another great cause of danger, as the bilge-water would gradually convert them into soluble salts which will deposit their copper upon iron wherever a crack or abrasion enables them to come into contact with it. Leakages from stores and cargo are in many cases of a character highly injurious to the iron. The bilge-water is also in constant motion, and the air in the confined spaces of the hold is rich in carbonic acid gas, and of high temperature, all important factors conducive to rapid rusting, which will be localized by the abrasion of the paint or cement covering by the shifting and

Digitized by Google

movement of the cargo, stowing of stores, coaling, and many other causes incident to the working of the ship.

Complicated as may be the question of internal corrosion and protection, that of the outside presents problems of greater apparent moment, as the corrosive effects appeal more forcibly to the observer, even if the actual damage to the life of the ship is less than the unseen corrosion in progress an inch away, but on the other side. This outside protection has been attempted in two ways—by metallic and non-metallic coatings. So far all attempts at metallic coatings have proved failures. Copper, tin, and lead have been tried, but these metals are electro-negative to the iron, and cause rapid corrosion wherever any abrasion of the coating or damage to the insulating material is had from collisions with floating wreckage, ice, docks, coaling barges, weighing anchor, and other ordinary causes.

Zinc is practically the only metal that can be used to place the plates and metal work of the ship in an electro-negative condition, and in the use of this there must be galvanic action, which must take place evenly all over the surface of the iron plates, which means that the zinc sheathing must be in uniform metallic contact with the iron, otherwise the wasting of the sheathing might be so rapid as to require frequent renewal. That, aside from the question of cost, would in many cases render its application impossible.

Prof. Vivian B. Lewes,* in his paper, "The Corrosion and Fouling of Iron and Steel Ships," has exhaustively set forth the many difficulties encountered and the many methods and materials employed in furtherance of this subject. The length of the paper precludes its insertion in full, and the importance of the matter discussed renders abridgment equally undesirable. Professor Lewes' deductions are not in accord on many points with other writers or practice of the day in many marine yards, but in the main are eminently practical and instructive, and I draw freely from the paper for some of the material presented here.

As before stated, the use of copper, tin, and lead having been found detrimental to the iron plates of a ship by increasing the corrosive effect on any immersed section of it, even in fresh water,

* A paper read at the thirtieth session of the Institution of Naval Architects by Prof. Vivian B. Lewes, F.R.S., F.I.C., Royal Naval College Associate, April 12, 1889; and published in full, *Scientific American Supplement*, Vol. XXVIII., No. 709, August 3, 1889; pp. 11,320–11,324.

Digitized by Google

zinc remains as practically the only metal that can be employed, and it is to this metal that inventors have turned from time to time, the chief novelties being in the method of attachment.

As far back as the year 1835, Mr. Peacock tried zinc plates on the bottom of H. M. S. *Medea*, and in 1867 Mr. T. B. Daft again brought the subject forward; Sir Nathaniel Barnaby, Mr. McIntyre, and others also suggesting various plans of attachment. In 1888 Mr. C. F. Henwood read a paper before the United Service Institute, strongly advocating zinc sheeting as attached by his system.

When the galvanic contact has been but small, then the sheeting has had a certain life, but has afforded *but little protection* to the iron, and has gradually decayed away in a very uneven fashion; while in those cases where galvanic contact has been successfully made, the ship has on several occasions returned from her voyage minus a considerable portion of her sheeting.

Another drawback to the use of zinc sheathing is one which was found when it was used to coat wooden ships, and that is that zinc, when in sheets, like every other metal, is by no means homogeneous, and that for this reason the action of the sea-water upon it, leaving out of consideration galvanic action, is very unevenly carried on, the sheeting showing a strong tendency to be eaten away in patches, while the metal itself undergoes some physical change and rapidly becomes brittle.

Attempts have been made to galvanize the iron before the building of the ship, but Mr. Mallett showed, as early as 1843, that this coating was useless when exposed to sea-water, as in from two to three months the whole of the zinc coating was converted into chloride and oxide; and that when, therefore, galvanizing is used care must be taken to protect the thin coating of zinc. In any case the galvanizing must be done after the plates are riveted up, as any break in the surface would set up a rapid wasting away of the zinc; and the process could, therefore, be only used on small craft. Fresh water has less action upon the zinc than sea-water, and for this service galvanizing could be attended with some measure of success, the rapid wasting of the zinc in sea-water being due to the salts.

"The non-metallic coating, in the form of paints and compositions which are intended to do away with corrosion, have been almost endless. At the present moment there are upward of fifty

Digitized by Google

in the market, while the patent list of the last fifty years contains an enormous number which were practically still-born.

"They may be divided for convenience into—

"(*a*) Oil paints.

"(*b*) Pitch, asphalt, tar, or waxes.

"(*c*) Varnishes consisting of resins and gums dissolved in volatile solvents.

"(*d*) Varnishes containing substances to give them body.

"(*e*) Coatings of cement.

"Before going into these in detail, it is necessary to consider the condition of the surfaces to which they will have to be applied, and the effect this will have upon them.

"Air has the power of holding water vapor in suspension, the amount so held being regulated by the temperature; the higher the temperature the more can the air hold as vapor, while any cooling of the air saturated at the particular temperature causes a deposition of the surplus moisture. When a ship in the dry dock is scraped down to the bare iron, there is a large surface of metal which varies in temperature much more rapidly than the surrounding air, and cools more rapidly than the stone walls of the dock; and as it cools, so it chills the layer of air in immediate contact with it, and causes a deposition of the surplus moisture on its surface, called 'sweating of the iron,' and on this moist surface the protective coating has to be painted. If a rapidly drying varnish is put on, the rapid evaporation of the volatile solvent causes another fall of temperature, which causes a deposition of moisture, this time on the surface of the paint, so that the coating is sandwiched between two layers of moisture, both of them probably acting deleteriously upon the resin or gum in the varnish, while the moisture on the iron prevents adherence of the varnish to the metal. If, instead of a quick-drying varnish, red-lead and linseed-oil paint had been used, the second deposit would not have taken place, but the sweating of the iron would have prevented cohesion, and, when dry, any rubbing of the coating would bring it off in strips."

The condition of the outer skin of a ship while being coated with the protective compound is one of the prime factors in the discrepancies found in the way in which compositions act; it being a very usual thing for a composition to give most satisfactory results on several occasions, and then, apparently under exactly

Digitized by Google

similar circumstances, to utterly break down, and to refuse even to keep on.

This feature will be again referred to later on, in the details of the test of paint by the United States Navy Department.

Too much stress cannot be laid upon the condition of the plates at the time of coating; and it is absolutely essential, either to have a perfectly dry ship, or else a composition which is not affected by water. The first condition could be met in part by housing the dry-dock, and the second by the discovery of some cement of a hydraulic character, that, unlike present known samples, would not be porous and rigid when applied, but would possess sufficient elasticity to conform to the many changes in temperature that a ship must ever be subject to in seas and waters of varying densities, as well as from the air and the heat generated in the working of the ship.

The difficulty of obtaining adequate experimental data, and the fact that nearly every one who has worked upon the subject has had a composition of his own to bring before the public, and the interchange of ideas between the various inventors and the authorities in the various commercial marine, and government navy yards, has been so hampered and restrained, that at the present time but scant progress has been made on this most important question, beyond the point reached twenty years ago; and the object in bringing this paper at length before the A. S. M. E. is to invite discussion, and to bring some, if not all, the data down to date, or as near it as possible, rather than to bring forward any new or startling discoveries. The multiplication of iron and steel structures, other than the merchant and naval marine, is increasing so rapidly, and the methods taken for their preservation appear to be so hap-hazard, that, late in the day as it may appear to be, it is yet early enough to set ourselves right on this matter, as we have done in the mill-scale evil, and as we have yet to do in the anti-fouling methods, when the start originally made in an obviously wrong direction has to be corrected after the useless loss of millions of treasure.

It is often noticed, on breaking up old iron ships, on the back of the plates, the numbers and sizes and other marks painted on them with white lead and linseed oil before the ship was built, and under these paint marks the iron is found in a perfect state of preservation, the secret being that the paint was put on while the plates were, if not hot, at least warm and dry.

Digitized by Google

The same is also noticed where red lead and linseed oil, and lamp-black and linseed paints are used; the instances of failure with all these paints being distinctly traceable to cases where the plate was wet or damp at the time of marking, or that the paint was impure in either the oil or pigment, or both.

Among the oldest protective compositions in use is boiled linseed oil mixed with white lead (a carbonate) and red lead (an oxide), both of which have shown remarkable instances of endurance and permanency and resistance to corrosion in atmospheres charged with corrosive gases, moisture, sea-air, etc. Of these two pigments, the white lead is the most subject to change, sulphurous acid, gases, and fumes changing the carbonate to a sulphate of lead, easily decomposed or broken down by moisture and washed out by rain.

M. Jouvin, of the French navy, as well as some English and other French experimental authorities, claim that compounds of lead (of which there are many), when exposed to the wasting of the vehicle by the action of sea-water, are converted into chloride of lead, and this is acted upon by the iron, forming chloride of iron, and depositing lead, which carries on the rapid corrosion of the iron by galvanic action. I think this effect has been caused when white lead and red lead have been mixed together with some other inert substance to form the lead pigment employed; and as many of the usual pigment compositions only unite mechanically with the oil and do not chemically combine with it, the cause of failure to protect might have been foreseen from the start. White lead of itself does not chemically combine with linseed oil, either raw or boiled, and as a sequence is more subject to change or decay than red lead; and any admixture of white lead with red lead as a protective covering to any iron body is an element of weakness to the pigment, and consequently to the paint, and not as good as barytes or silica, which in their natural state resist moisture, gases, and most of the weak acids, and do not change their nature in this respect by the process of grinding, either alone or with red lead for a pigment.

Professor Lewes and many other experimental chemists and writers ignore the fact that pure red lead and linseed oil, either raw or boiled, chemically combine with each other and form, as but few other substances do, a compound that possesses the power of absorbing oxygen from the atmosphere for months and possibly years, until the increase in weight reaches from seven to eight per

Digitized by Google

cent.; also, the other remarkable property of "setting," an action similar in many respects to the "setting" of hydraulic cement and hydrated gypsum when mixed with water. This setting process, once commenced, cannot be broken up or disturbed without ruining the product.

This "setting" of red lead is due to two chemical reactions; namely, a combination between the litharge of the red lead and the glycerine of the oil, and also a combination between the litharge and the fat acids of the oil, resulting in the formation of a lead soap. It is well known that red lead and glycerine make a very hard and good cement, and it is also known that lead soap is quite a firm substance; so that it is possible that both of these reactions may take place, and if so, they explain the setting of red lead. No other pigments, other than those prepared from the oxides of lead and manganese, possess this power of "setting," whatever other qualities they may possess for pigments.

Another well-defined quality in red lead, and which places it at the head of the list of materials for anti-corrosive purposes, is, that when pure and applied with linseed oil and allowed to set and dry properly, or when applied dry to the clean surface of iron or steel and allowed to remain for a few months, it oxidizes the surface of the metal to a slight extent, forming thereon the black or magnetic oxide of iron (Fe_3O_4), which is non-corrosive and unlike its immediate neighbor, Fe_2O_3, the red oxide of iron, or red rust.

A few other substances also possess this magnetic oxide or non-corrosive forming power; namely, pyrolusite, or manganese dioxide ore, the bichromate of potash, chromate of lead, and some others, that are coming into use for anti-corrosive paint compounds, and whose future use for this purpose is assured.

Professor Lewes cites the case of H. M. S. *Nile*, which, after being painted with red lead, was moored some months in Milford Haven, with the result that her bottom was seriously corroded, and, on examination of specimens of rust taken from her, the crystals of metallic lead were easily identified. This would be an important case if one but knew under what conditions the ship was painted; whether over old compositions only partly removed, or whether the iron was clean and bright, and if the paint was applied on sunny, bright days or in damp and foggy weather with a sweat coat between the iron and the paint, and between the coats of paint, or the ship put into the water before the paint was dry; furthermore, was the red lead pure, or did it contain a liberal

Digitized by Google

amount of brick dust? and the linseed oil, how heavily was that charged with buffum? One swallow does not make a summer. To offset this example, I cite that the Department of Construction and Repair for the United States Navy have lately placed the splendid cruiser *New York* at the mercy of a red lead paint, by scraping her to the clean iron and applying that paint for the anti-corrosive compound, and this with the experience of the whole world in view to select from, and, as will be seen later on in the report of paint tests for the United States Navy, they are well justified in their action.

The second class of protectives, consisting of tar and tar products, such as pitch, black varnish, asphalt, and mineral waxes, are among the best protectives; the waxes especially not being affected by the "sweating," and form durable coatings for the plates. In the case of tar and tar products, and particularly those products from coal-tar, which are liable to contain small quantities of acids and ammonia salts, if care be taken to eliminate these, and if it could be managed to apply this class of protectives hot to warm plates, the question of protection would be practically solved; bituminous and asphaltic substances forming an enamel on the surface of the iron which is free from the objections raised against other protectives, that is, that being microscopically porous they are pervious to water.

These tar and coal-tar products, by a new method of oxidizing them, are changed from a hard and vitreous coating to an elastic one resembling caoutchouc, that enables them to meet minor accidents of abrasion without destroying the adherence of the coating to the iron, and appear to be capable of receiving and holding about all the substances of nastiness in smell and taste that inventors have considered necessary to incorporate into their mixtures in order to render them anti-fouling.

The third class of protectives consists of varnishes formed by dissolving gums or resins in volatile solvents, such as turpentine, naphtha, fusil oil, bisulphide of carbon, etc. Such varnishes are open to several objections; they are acted upon by moisture, which causes a deposition of the resins or gums as a non-coherent powder and destroys the tenacity of the varnish. This action depends a great deal upon the proportion of the solids to the solvent. If the resin or gum is comparatively small then the moisture will have little effect on the coating after it is dry, but in the drying process the evaporation of the comparatively large quantity

Digitized by Google

of volatile solvent reduces the temperature of not only the metal but the surrounding air, and a deposition of moisture is had on the green coating that produces disastrous results.

A coating of varnish is thought to be perfectly homogeneous, but the microscope shows it to be full of minute capillary tubes, which are gradually enlarged by their shrinkage in drying and by the action of moisture, and finally result in the destruction of the coating. The application of several coats of varnish tends to diminish this evil, as, in general, the holes in the second coat will not correspond with those in the first, and each succeeding coat will tend to make the protective coat more and more impervious. In using such varnishes they should only be applied in favorable weather, and each coat must be allowed to harden well before the next one is applied, and all must be thoroughly hardened before being brought into contact with the water.

In the fourth class, varnishes to which body is given by the addition of foreign constituents, generally mineral oxides; and this class is preferable to the third class, if the solvent or vehicle used is not too rapid in its evaporation (which is seldom the case), and if care is taken to select substances which do not themselves act injuriously upon iron, or upon the gums and resins which bind them together, and are also free from any impurities which could do so.

The substance generally used to give body and color to such varnishes is the red oxide of iron, Fe_2O_3; *the color of which effectually masks any rusting which may be in progress under it*, even if it is not contributing to the corrosion, or, in fact, the inaugural and prime factor in the case. Red oxide of iron contains free sulphuric acid and soluble sulphates as common impurities, which are extremely injurious, and greatly increase the rate of corrosion. *The finest colored oxides*, as a rule, are the worst offenders in this respect, as they are made by igniting green vitriol, or copperas (sulphate of iron); and in most cases the whole of the sulphuric acid is not driven off, as the heat necessary to do this impairs the color. This acid is often neutralized by washing the oxide with a dilute soda solution; but, as a rule, no steps are taken to wash it free from the resulting sulphate of soda which is left in the oxide. Another plan to remove the sulphuric acid from the oxide consists in mixing carbonate of lime (common chalk) with the oxide, forming sulphate of lime, an inert substance, and much used as a pigment in cheap paints. Fully hydrated sulphate of lime (gypsum) is often added to the ground oxide of

Digitized by Google

iron colors to the amount of forty-five per cent., by weight, with the view of not only giving body to the paint and cheapening its cost, but in a measure to neutralize the corrosive action of the oxide by turning some of its corrosive energy from the metal to the pigments, oils, and solvents that bind them. An analysis of an oxide of iron of an exceptionably fine color showed over fifteen per cent. of sulphate of soda. As this sulphate-like talc (steatite or soapstone), feldspar (decomposed mica, granite, gneiss, and basalt), kaolin (pipe clay) are all broken down, or decomposed from their mineral condition by water, they never lose their tendency to descend still lower in the plane of oxidation in the presence of moisture; and their use in a paint compound, whether for ferric or other structure, can in no manner add to their protection, or afford but little durability to the paint.

Hematite ore, calcined at a high temperature, is generally free from sulphur compounds, but it frequently contains as high as forty per cent. of alumina (clay) that is soluble in water, and objectionable for the same reasons as above. There are iron oxide paints advertised strongly for pigments as containing over seventy per cent. of metallic iron in the form of sesquioxide, Fe_2O_3; but the principal paint chemists, that buy and use paints instead of selling them, unite in condemning any oxide color that contains over fifty per cent. of sesquioxide.

A ready test for soluble sulphates in red oxide of iron is to warm a little with pure water, filter through blotting-paper, and add to the clear solution a few drops of hydrochloric acid, and a little of a solution of chloride of barium (both obtained at any drug-store). If a white sediment forms in the solution, the sample should be rejected. Sulphur in any form, either in the roll, dry as a flour, or in a liquid form, as sulphurous or sulphuric acid, or in the vapors arising from its combustion, is an enemy of all ferric bodies, as well as to oil and solvent compounds called paints and varnishes. If the pigments are capable of resisting the presence of sulphur, the oils and solvents are not, and are quickly decomposed, and allow the moisture from the air or water to so reduce their bond to the material that they cover as to be easily removed, even if they do not fall off of their own accord. There are paint compounds on the market, specially designed and advertised as anti-corrosive, that contain, as the principal solvent of the pigment employed, bisulphide of carbon, CS_2 (made by passing the vapor of burning sulphur over ignited charcoal or coke),

Digitized by Google

that contains by analysis from six to ten per cent, by weight, of sulphur, and whose smell during the application of the paint is strong enough to almost drive the workmen out of a dry-dock; and yet such paints are bought at high prices per gallon, and used with a calm trust that corrosion is to be a thing of the past. In fact, there are but few of the compositions that struggle through the different patent offices of the world as anti-corrosive compounds that do not contain sulphur in some form or other as one of their ingredients, else some of the numerous substances whose union in the pigment form galvanic couples, that begin not only the work of destruction upon themselves but upon the liquid that bonds them; also, of the metallic surface that they cover and are supposed to protect.

The fifth class of protectives, cement coatings for the protection of the external skin of vessels, in the form of vitreous glazes, glass, etc., have entirely been abandoned. Hydraulic cement, however, is used successfully to a great extent upon the inner portions of the hull, and will be considered further on. Its weight and difficulty of attachment, as well as the porous character of the covering, even when externally coated with a silicate or paint compound, render it unfit for outside ship work.

The protective coverings for the outside or bottom of ships appear to rank, (*b*) pitch asphalt, tar, and waxes; (*d*) varnishes containing substances to give them body, *i. e.*, oxide of zinc and oxide of lead either alone or in combination with each other; (*a*) pure red lead and linseed oil paint. The conditions under which any of these compounds can be applied with a fair measure of trust in their effectiveness are: that the compound should not be too thick to spread well, and should be well worked with the brush to the surface of the metal that it covers; that the air should be as dry as possible, and the plates of the ship not only free from mill scale, but clean and free from all oil and dirt due to machining processes, handling, scaffolding, also from any indication of sweating; and if the plates can be warmed either by the sun or by artificial heat, the better will be the result. Too much dryer in the form of volatile solvents must not be used. A paint that dries in four hours cannot, in the natural course of things, be as good as one that dries in as many days. If the plates and frames have been galvanized by either the hot or cold process, then the principal pigment in the composition must be oxide of zinc, in order that any galvanic action due to immersion in the

Digitized by Google

sea water may be at the expense of the renewable zinc in the pigment, instead of the zinc coating on the metal; and the pigments used with the zinc oxide, to give body to the paint, must be ground barytes, or silica, both neutrals electrically, and neither are broken down by moisture as the other above-mentioned pigments are.

The causes and extent of the internal corrosion of ships have been referred to hereinbefore, and the main classes of protectives are, (1) cements, (2) bituminous coatings, (3) paints.

The rigidity, firmness of adherence, and endurance of cement coatings are all points of the greatest advantage; the silicates present in the cement not only bind it into a mass of wonderful hardness, but also bind it to the iron. A drawback to the use of cement consists in its porosity, that allows it to be permeated by gases and liquids, and if by any accident copper scale or scrap from the interior fitting reaches the warm bilge water, charged as it ever is with more or less sulphurous and other acids from the coal bunkers and ash pits, and carbonic acid gas, the soluble salts of copper thus formed will soak through the cement, deposit the copper upon the iron skin or frame, setting up galvanic action, corroding the iron, the formation of the rust loosening and pushing up the cement, and allowing corrosion to extend its area and depth with but little or no sign of the damage taking place below it.

The hardness and rigidity of the cement give it a tendency to flake off from the iron under strains due to the expansion and contraction of the metal, mechanical injuries from stowage of cargo and stores, repairs to the vessel, riveting, etc. These injuries, though local or of minor extent, become starting points for corrosion that generally becomes serious before discovery, owing to their location in the confined spaces of the ship where inspection is difficult.

The quality of the cement used has much to do with its effectiveness as a coating. As a rule, but little attention is given to the quality of the cement used, or to the manner of preparing it for coating, or the length of time between its preparation and application, all points of extreme importance to secure a good result, but all in general left to the care of the lowest grade of labor about the ship-yard; and the precautions that the builder of a common sewer would insist upon to get a good job are ignored, though the comparative interests involved are as thousands to one.

Digitized by Google

For the above reasons it is considered that bituminous or asphaltic varnishes properly prepared by being freed from any acids that are present in their crude state, and if these can be applied hot to warm metal, are far superior to cement coatings for the internal work of a ship; also red-lead-pyrolusite and other tough paints free from oxides of iron form effective coatings, preference being given to the lighter colors, as corrosion, if set up, is quickly discovered and easily repaired. If the frames and interior fittings of the ship have been galvanized, then the precautions mentioned for like cases on the external portions must be observed.

As Prof. Lewes fittingly states: "When approaching the subject of fouling, one is impressed with the apparent hopelessness of obtaining any reliable information from the successes or failures registered by the bottoms of vessels in the naval service or in the merchant marine. Hundreds of ships have been examined, the condition and nature of the compositions used upon them registered, and just as one begins to feel that the key to the mystery of fouling is within one's grasp, a whole series of results so abnormal suddenly comes to light that it seems impossible to reconcile them with one's previous experience. A ship may sail half a dozen times to the same waters, coated with the same composition: on four occasions she will come home clean and in good condition, while on the other two voyages she will accumulate an amount of weed and animal life sufficient to knock down her speed from nine knots to five. Moreover, if the compositions with which she was coated be examined, and scrapings taken from her on her return, no cause will present itself that can in any way explain the great difference in her condition.

"After several years of close observation, however, certain factors begin to establish themselves. Ships at sea from March to August show a worse average than those afloat from August to March. Fouling also increases if the ship has been long at anchor in the same port. Ships lying at the mouths of rivers, although quite clean in the brackish water, foul much more rapidly on going to sea than vessels which have been cruising, or even at anchor, for the same time in salt water; and certain ports and certain seas seem to exercise a deleterious effect, both as regards corrosion and fouling, not to be found elsewhere.

"The naval history of the past shows that fouling is no new

Digitized by Google

trouble born with the advent of iron vessels, but that it has been the one trouble that the combined engineering and scientific skill of many centuries has been unable to overcome.

"With wooden ships, metallic copper sheathing, if it were of the best kind, answered the purpose fairly well; but the copper wasted so fast that inferior brands, containing iron, zinc, lead, and other alloys, were substituted to reduce the loss, and, with the slowing down of the destruction of the copper, fouling at once returned."

When iron ships began to replace wooden ones, attempts were made to utilize the metal which had before given relief; but galvanic action was at once set up by the copper, which was fatal to the iron plates of the ship. Attempts were then made to sheathe the ship with copper insulated from the iron plates by wooden planking and other substances, which, notwithstanding the difficulty of application and risk to the vessel from accidental injury to the insulating material, has been attended with beneficial results, and in the future will be more extensively employed, especially for vessels navigating tropical waters, where the cost and inconvenience of docking is each year becoming more and more expensive, as instanced lately in the United States naval vessel *Bennington*, that in two successive trips of 688 miles, between Acapulco and Libertad, made with a comparatively clean bottom and a foul one, showed the following record:

First trip made in 86 hours, at an average speed of 7.85 knots, with 67 tons of coal consumed, at $21.70 per ton, or $1,453.90 fuel account for the trip; second trip, average speed 6.20 knots, with 129 tons of coal consumed, costing $2,799.30. In the first case, one ton of coal was equivalent to a run of 10 miles, in the other case to 5 33 miles. Other records show similar results; and it is not unusual for vessels to cruise from Montevideo Station to Cape Town, Africa, for the purpose of being docked, being absent from their stations for months, and entailing a great expense for coal, aside from the usual expenses attending their commission.

"Early in the history of iron ship building, coatings of paint were used, so prepared as to fulfil approximately the same functions that the copper plates had done.

"The first patent for a paint of this character was issued in 1840; and at the present day there are some fifty different compo-

Digitized by Google

sitions on the market, the best of which, under favorable conditions, cannot be relied upon to keep the ship fairly free from fouling beyond nine months; and it is possible that the reason of this is, that a start was originally made in the wrong direction.

"The idea from which has been developed the present class of anti-fouling compositions was, that the copper salts, formed by action of sea-water on the metallic sheathing, owed a considerable portion of their value as anti-foulers to the poisonous action they exerted upon marine animal and vegetable growths; but the study of the natural history of these lower forms of animal life and vegetation shows that it is only in the early stages of their growth—the germ period—that metallic poisons can affect them.

"Sea-weeds do not take in the constituents required for their growth by means of their roots, as is to a certain extent the case with ordinary plants, but absorb them by means of their pores from the water itself, the root only serving to attach them to the solid they choose for their resting place; and when a marine plant that has passed the first stages of existence is torn from its support, it cannot re-attach itself to anything, while most of the mineral poisons have little or no effect upon their life and growth.

"With animal life found on a ship's bottom, the under side is used to cling on with only, and not as an extractor of nourishment; therefore, after the seeds and germs have once attached themselves to the ship, no amount of poison that can be put into a composition will have any effect upon them. Metallic poisons undoubtedly do exert an influence upon the germs in their earliest stages; but after that they are perfectly useless as anti-foulers, and only imperil the plates of the ship. The germs of both kinds of growth are more abundant in the surface water near the shore than in deep water; therefore, the period that the vessel is in port is the time when the germs are likely to attach themselves, after which their further development is merely a matter of time.

"On examining the conditions under which a vessel is placed when coated with a composition which relies for its anti-fouling powers on metallic poisons only, the reasons which must make such a coating of little or no avail are at once apparent. In the composition there are drastic mineral poisons, probably the salts of copper, mercury, arsenic, etc., which have been worked into a paint by admixture with varnishes of varying composition, most of them quick drying, and contain large amounts of benzine or bi-

Digitized by Google

sulphide of carbon as solvents, and each particle of the poison is protected the same as the pigments are from the action of the sea-water by being entirely coated by this vehicle. That this must be so is evident, or the composition would not have sufficient adhesive power to stick on the ship. As a rule, care is taken to select fairly good varnishes which will resist the action of sea-water for, perhaps, two or three months, before they get sufficiently disintegrated to allow the water to dissolve any of the poison. Even with the use of inferior varnishes, three or four weeks will pass before any solution can take place, and any poison be liberated to attack the germs.

"A ship is dry-docked, cleaned, and, her anti-fouling composition having been put on, she goes, probably, into the basin to take in cargo. Here she is at rest; and, with no skin friction or other disturbing causes to prevent it, a slimy deposit of dirt from the water takes place, and this, as a rule, is rich in the ova and germs of all kinds of growth, while the poisons in her coating are locked up in their restraining varnish, and are rendered inactive at the only period during which they could be of any use. After a more or less protracted period, the ship puts to sea, and, the perishing of the varnish being aided by the friction of the water, the poisonous salts begin to dissolve or wash out of the composition; but the germs have already got a foothold, and, with a vessel sweeping at the rate of say ten to twelve knots through the water, the amount of poison which can come in contact with their breathing and absorbing organs is evidently so infinitesimally minute, that it would be impossible to imagine it having any effect whatever upon their growth. If the poison is soluble, it is at once washed away as it dissolves; if it is insoluble, then it is also washed away; but there is just a chance that a grain or two may become entangled in the organs of some of the forms of life, and cause them discomfort. As the surface varnish perishes, the impact of the water during the rapid passage of the vessel through the water quickly dissolves out or washes out the poisonous salts, and leaves a perished and porous, but still cohesive, coating of resinous matter, which forms an admirable lodgment for anything which can cling to it; and by the time the vessel lays to in foreign waters, teeming with every kind of life, the poison, which would now again have been of some use, is probably all washed away, and a fresh crop of germs is acquired, to be developed

Digitized by Google

on the homeward voyage, and a 'bad ship' is reported by the person who looks after her docking. It is evident that a poison, even if it had the power of killing animal and vegetable life in all stages, could only act with the vessel at rest, unless it were of so actively corrosive a nature as to burn off the roots and attachments of the life rooted to it; and if it did this, what, may it be asked, would become of the protective composition and the plates of the vessel? It is also evident that any poison so used must be under conditions in which it is very unlikely to be in a position to act when it might do good.

"The lamentable failure of composition after composition of this kind has gradually reduced them in number to some ten or twelve at the present time, and in most cases it is low price alone which keeps them in the market.

"The practical proof, given by experience, that poisons alone are unable to secure a clean bottom, soon led many inquirers to the conviction that it was the exfoliation in the case of copper which had acted in giving fairly good results, and in many compositions the attempt has been made to provide a coating which shall slowly wash off, and, by losing its original surface, shall at the same time clear away germs and partly developed growths, and so expose a continually renewed surface, in this way keeping the bottom of the vessel free from life. There is no doubt that, when this is successfully done, a most valuable composition will result, but the practical difficulties which beset this class of anti-foulers must not be overlooked. In order to secure success, the composition must waste at a fairly uniform rate, when the ship is at rest, and also when she is rushing through the water; and this is the more important in the case of service vessels, as in many cases they spend a large percentage of their existence at anchor or in the basins of our big dockyards. If a composition is made to waste so rapidly that it will keep a vessel clean for months in a basin, then you have a good composition *for that purpose;* but send the vessel to sea, and under conditions where you have a higher temperature, and the enormous friction caused by her passage through the water exerting its influence upon the composition, and you will find that the coating which did its work well for six months at rest in the basin will, in the course of one month under these altered conditions, be all washed away, and fouling will be set up. Noting this result, the manufacturer renders his composition more insoluble—less wasting—and so

Digitized by Google

obtains a coating which, when the vessel is in motion, scales just fast enough to prevent fouling, and good results at once follow; the composition is then put on the same or other vessels, and they take a spell of rest in the basin, and, bereft of the aid of the higher temperatures and the friction of the water, the composition ceases to waste fast enough, and bad results at once have to be recorded.

"There is no doubt that this is the true explanation of the wide discrepancies which are found between the compositions in the navy and in the mercantile marine. Take any of the big lines, their steamers are running at a fairly uniform rate of speed, and the periods of inaction are as short as the desire not to waste the charge on the capital they represent can make them; and under these conditions, by varying the constituents in the varnishes used for anti-fouling purposes, it is fairly easy, giving the necessary data, to so constitute a composition as to secure admirable results. But when you come to apply this same coating to an iron-clad running at various speeds, and as often at rest as in motion, then you at once find that the composition you before imagined to be all that could be desired fails just as lamentably as the tribe of anti-foulers which preceded it.

"It is not so very long ago that Professor Lewes had the honor to serve on an Admiralty committee under the able guidance of Admiral Colomb; and after inspecting many vessels in the mercantile marine, and watching all the dockings of service vessels over a considerable space of time, they were forced to the conviction that it was only in very rare cases that the condition of the bottoms of her Majesty's ships at all approached the freedom from fouling to be found in the ships belonging to the big companies, with the result that some of the most successful of the compositions in the mercantile marine were brought into use in the navy, and the reports of the dockings since they have been adopted will amply prove the existence of the difficulties mentioned.

"Another factor which is often overlooked, and which tends to give misleading results, is the action of brackish water, which in many cases seems to exert a special action in keeping the bottom of a vessel clean, the fresh water having a tendency to disagree with certain forms of marine growth, while the salt water is apparently equally unpalatable to the fresh-water forms of fouling."

In most of the compositions now in use, attempts are made to

Digitized by Google

combine strongly poisonous substances with exfoliating and wasting coatings, and this is done by either using metallic soaps—the basis of which is, as a rule, copper—or else by charging a perishable and easily-washed-off varnish with poisonous salts, consisting, as usual, of compounds of either copper, mercury, or arsenic, and in some cases all three.

"As has been before pointed out, it is not probable that the presence of these substances exerts any deterrent action upon the fouling, save perhaps when the vessel is at rest; but they exert undoubtedly an important influence upon the rate of exfoliation, as when the perishing of the varnish exposes them they dissolve, or are washed out, and in this way tend to disintegrate and clear away the surface more rapidly—an important and decidedly useful function, but one which might be more cheaply performed by substances other than high-priced metallic poisons.

"The use of metallic poisons of the character indicated throws an increased burden upon the protective composition; as, should the latter become abraded by friction of chain cables, barges alongside, or any other cause, the iron of the vessel will be attacked by the metallic salts, either present in the soluble form in the anti-fouling composition, or rendered so by the solvent action of the saline constituents of the sea water, the action of the metallic salts being to rapidly dissolve portions of the iron, and to deposit the metal which they contain upon the surface of the plates, and these deposits, exciting energetic galvanic action, cause corrosion and pitting to go on with alarming rapidity.

"Both mercury and copper salts are offenders in this way, but copper is by far the most objectionable, from the fact that the salts formed by the action of the sea water upon the compounds used in the compositions are far more soluble than the corresponding salts of mercury, and are therefore liable to be present in much larger quantity, and so exert comparatively a much more injurious action on the plates.

"As an illustration of this, two equal portions of sea water were saturated, the one with copper chloride, the other with mercuric chloride, and into each a piece of steel, planed upon one side, and of about equal weight and size, was placed and left for four days. At the end of this period the two plates were removed, and, after being cleaned and dried, were again weighed, when it was found that the one exposed to the copper-saturated sea water had lost 22.2 per cent. in weight, while the plate exposed to the mercurial

Digitized by Google

solution had only lost 3.6 per cent., this being due to the much larger amount of the copper salt soluble in the sea water.

"On now placing these plates in clean sea water, corrosion went on in each case with extreme rapidity, and after being exposed for a month, they had both wasted to about the same extent; that is to say, when once deposited on the iron, mercury is practically as injurious as copper.

"This experiment is not at all likely to be carried out in practice, as the inutility of small laboratory experiments has been often demonstrated, as they lack all the factors of mass of material and atmospheric influence, which play so important a part in a question like the present; but such an experiment gives one a definite and fairly correct idea of the relative rate of action of the two poisons upon the plates.

"All the time the ship is in motion, the wash of the sea water will prevent the metallic poisons doing the plates or the marine growths much harm; but there is one phase of this question which has been overlooked. In certain ports there is a fashion in compositions, and most of the homes of the mercantile marine have some pet local composition which is largely used at that particular port. If, now, many ships are lying in a basin, taking in and discharging cargo, and if the prevalent compositions contain copper, it is evident that a certain quantity will go into solution in the water, which often does not undergo frequent or rapid change; and under these conditions every ship in the basin will be exposed to the same danger, and wherever an abrasion has taken place in the protectives, there copper will be deposited on the iron, causing corrosion and destruction of the plates; and it must be remembered that when the vessel is next docked and coated, no amount of scraping will remove the fine particles of copper deposited in the pitted and corroded portions of the plate, and so finely divided as to be invisible to the eye, but that they will remain and carry on the destructive work under the new coatings of the protective.

"It is a well-recognized fact, that, when a vessel coated with a copper compound has become corroded from failure of her protective, or from abrasion, even an entire change of composition does little or no good in stemming the tide of corrosion until after some considerable period has elapsed, a result which is due to the same cause; and inasmuch as copper compositions are a source of danger, not only to the ships coated with them, but to any others which may be at rest in the same basin, it may be strongly urged

Digitized by Google

upon the manufacturers to abandon the use of these deleterious compounds, and to use others equally efficacious and free from the grave objections that have been enumerated.

"At the present time, fifteen out of thirty-two principal compositions rely upon copper in some form or other as the basis of their anti-fouling composition, and in one which has enjoyed considerable favor finely divided metallic copper itself is used; and should a vessel coated with it, after the varnishes had commenced to disintegrate, be moored alongside an iron ship by a chain cable, or even by a wet hawser, a big galvanic couple would be formed at the expense of serious damage to any exposed iron.

"In the history of anti-fouling many attempts have been made to obtain highly glazed and glass-like surfaces, which it was hoped would withstand the action of sea water, and afford no lodgement to marine growths; but even glass itself is slowly acted upon by sea water, and, when once roughened on the surface, will foul, while the rigidity of such coatings, and the straining and cracking consequent on unequal expansion and contraction of the plates and their coating, offers a serious obstacle to any such scheme.

"In concluding this long paper, it may be pointed out that in the present phase of the anti-fouling question, and until some new principle for preventing marine growth has been advanced and successfully adopted, satisfactory results can only be insured by an intelligent use of the existing compositions.

"The protective composition is the important composition, and care must be taken to obtain the best in the market, as, if the protection is good, the plates remain uninjured even if fouling takes place. The anti-fouling composition to be used with it must either be elastic or have the same rate of contraction and expansion as the protective, and must—at any rate in the navy—be chosen to suit the work to be done; such as contain copper compounds being carefully rejected, while preference should be given to those which rely on exfoliation rather than mineral poisons. If a vessel is to remain at rest for a considerable period, an anti-fouling composition which exfoliates rapidly, and which also contains poisons known to act on germ life, must be used, the amount of such poison depending on the seasons and the waters in which the ship is to be; while if a vessel is to be continually running, then a slowly exfoliating composition must be employed, and a very small percentage of poison

Digitized by Google

is all that is required, as skin friction and the comparative absence of the germs and spores in deep water will do the rest.

"Our ships represent an enormous capital, and any trouble or care which will prolong their existence is well worth taking and will be amply repaid; and at the present time a heavily corroded and foul vessel means either ignorance or negligence on the part of those who have the responsibility of deciding on the compositions to be used; and, finally, it must be clearly borne in mind that there is no anti-fouling composition which ever has been made, or probably ever will be made, that will answer for all cases, and that until this is clearly recognized the present unsatisfactory condition of the question will exist."

UNITED STATES NAVY DEPARTMENT PAINT TESTS, 1858.

Under the direction of the Secretary of the Navy, William E. Chandler, December 16, 1884, orders were issued to the Bureau of Construction and Repairs (T. D. Wilson, Chief of Bureau) to detail Naval Constructor William H. Varney, U. S. N., to superintend a test of paints and anti-fouling and anti-corrosive compositions for wetted surfaces, with a view of obtaining the most efficient composition for the protection of the iron and steel vessels of the United States Navy.

Samples of paints, etc., were invited from all manufacturers of such paints and compounds; the test was to be made at four or more navy yards, under such conditions as to insure absolute impartiality, and to be conclusive as to the relative merits of the paints and compounds submitted for trial under the same conditions as would occur in practice.

Test plates of steel 2 feet 6 inches x 3 feet, weight 5 pounds to the square foot, were pickled and freed from scale, scoured clean, wiped dry, weighed, and then coated on each side with a sample of paint applied according to the instructions sent by the several manufacturers, particular care being taken to have these instructions explicitly followed.

The plates were to be separately weighed after the paint was dry and ready for immersion, and were to be exposed to the action of sea water for eight months, and to be inspected at the end of four months, and their condition accurately recorded at each period. Care was exercised that the plates, when in the cage and

Digitized by Google

immersed, that no galvanic action could be induced by contact with any object.

At the end of the test period (eight months) the plates were to be removed from the immersion cage, dried in the open air, weighed, and the general appearance of the coating noted; then the paint was to be removed, the actual condition of the plate ascertained, and weighed again for the loss by corrosion during the test, etc.

A further test was made by coating about seventy-five square feet of surface on a steel vessel with each of the several compounds, arranged so that practical uniformity might be had; the paint that was used to coat the several sections at the bow or stern of the vessel on one side was used amidships upon the other side.

The vessel was docked, scraped clean from rust, and the metal made as nearly uniform in condition as possible before the paints were applied, and when thoroughly dry the vessel (the United States steamship *Speedwell*) was undocked and placed in service, September 4, 1885, and redocked to examine the condition of her bottom, July 8, 1886, having been in the water ten months and four days, and sailed by log on short trips about three hundred and thirty-eight miles in the coast waters of the United States.

The report upon these paints bears date from the League Island Navy Yard, Philadelphia, Penn., September 1, 1886, signed by Wm. H. Varney, naval constructor, and addressed to the Chief of Bureau of Construction and Repair, Navy Department, Washington, D. C.

Sixty different firms in the United States, Canada, and England responded to the request, viz.:

37	firms	sending	paint	or	compounds	for	5	tests....	185 applications.
2	"	"	"	"	"	"	4	"	8 "
8	"	"	"	"	"	"	3	"	24 "
7	"	"	"	"	"	"	2	"	14 "
6	"	"	"	"	"	"	1	"	6 "
60	firms all.							Total tests,	237
	United States Navy experimental paints.....								11
									248

As there were two separate surfaces coated with each of the above paints, the total number of applications was four hundred and ninety-six, distributed at four navy yards and on one government vessel in service.

Digitized by Google

The record of the test is, viz.:

Reference letter of Firms' Paints.	Order of Merit in U.S. Navy Dept. test of Firms' Paints, 1885, at the different Navy Yards, U.S.A.					Color of Paint.
	Key West Navy Yard.	Norfolk Navy Yard.	League Island Navy Yard.	Portsmouth Navy Yard.	U.S. SS. *Speedwell*.	
	Order of Merit.	Order of Merit.	Order of Merit.	Order of Merit.	Order of Merit.	
U.S. Navy	.....	13	.....	.....	1,2,8	White (2) Black (1)
a	1	10	1	.....	7	Lead
b	2	12	12	.....	15	Black
c	3	7	6	10	3	Pea green
d	4	15	.....	.....	.....	Not given
e	5	.....	.....	13	13	Vermilion
f	6	9	7	.....	.....	White
g	7	11	8	15	.....	Dark drab
h	8	.....	.....	.....	.....	" "
i	9	8	15	.....	4	Flesh
j	10	.....	14	5	.....	Brown
k	11	.....	11	4	14	Red
l	12	4	3	2	.....	Lead
m	13	3	9	.....	.....	Dark drab
n	14	1	5	3	11	Bronze green
o	15	2	.....	1	10	Dark green
p	.....	6	2	.....	5	Stone
q	.....	5	.....	.....	9	Dark brown
r	.....	14	10	.....	.....	Crocus
s	.....	.....	13	7	.....	Green
t	.....	.....	4	.....	.....	Drab or gray
u	.....	.....	.....	6	.....	Brown
v	.....	.....	.....	8	.....	Brown
w	.....	.....	.....	9	.....	Vermilion
x	.....	.....	.....	11	12	Black or dark blue
y	.....	.....	.....	12	.....	Black
z	.....	.....	.....	14	.....	Chocolate

At Key West there were 52 firms' paints; number in the order of merit, 13.
At Norfolk " 49 " " and 3 U. S. Navy " " " 14.
At League Island " 48 " " none " " " 14.
At Portsmouth " 47 " " and 3 " " " " 15.
U. S. S. *Speedwell* " 47 " " " 5 " " " " 8.

The order of merit had been increased to fifteen when necessary to render a comparison possible.

Including the United States Navy experimental paints, there were twenty-nine separate records for places of merit in one or the other of the five different locations and tests.

But 2 firms secured a place in the order of merit in all the tests.
" 8 " " " " " " 4 of the tests.
" 6 " " " " " " 3 " "
" 3 " " " " " " 2 " "
" 7 " " " " " " 1 " "
United States Navy experimental, 11 samples secured 3 " "

Digitized by Google

In the instances where the paint did not succeed in gaining a place in the several orders of merit, the condition is reported upon, viz.: "Paint nearly all gone; plates rusty. No evidence of paint. Paint all gone; plates badly pitted and rusted. Paint peeled soon as removed from the water. Paint about half loose and half blistered; plate rusty. Paint covered with rust spots; plates badly rusted; and in a few cases, paint in fair condition, plates rusted, etc."

So far as classifying these, it was a Hobson's choice between them; all were bad, and the few paints reported as in a fair condition showed such signs of utter failure as anti-corrosive compounds that a few weeks more of exposure would probably have destroyed all evidence of their application except in fragmentary spots where the shells, barnacles, and other marine growths *had protected* the paint and the plate in some small measure.

Examination of the record of merit columns shows a wide fluctuation in the value of the compounds at the different navy yards under almost identical conditions of exposure.

Paints first, second, or third, etc., in one navy yard, dropping to the foot of the record of merit at another yard, or failing to get a place at another, reappear again in the Speedwell column. Prof. Lewes also notes this peculiarity in the English compositions.

The names of the different firms furnishing the paints and the trade-marks names of the paints are withheld, being represented by single letters of the alphabet in the record of merit column, and by double letters of the alphabet in the no-place column (not published).

The official report of this test published by the U. S. Navy Department being practically exhausted, members of the A. S. M. E. and others desiring to examine the full report will find a copy in the library of the A. S. M. E. with the engravings from the photographs taken of the appearance of the paints at the several navy yards at the expiration of the test, also engravings of the bottom of the U. S. S. *Speedwell* when redocked for examination.

It was noted that the two sides of the *Speedwell* presented so uniform an appearance that only one side was photographed; the position of the paint sample, whether amidships, bow, or stern, near the keel or water line, had no apparent effect upon the durability of the paint to resist either fouling or corrosion.

Digitized by Google

It may also be noted that some of the paints that failed to get any record of merit at this Government test, and whose place in the column of demerits was as near the tail end of it as possible to get, are to-day in the full tide of prosperity under the improvements of a new trade-mark; whether any improvement in the composition of the said paints has been made, apparently matters little. The test was a severe one for this especial duty, but it demonstrates that any composition that could withstand it meritoriously is a good paint for use in the many other situations where paints are required for preservative effects on either wood, mineral, or metallic surfaces in sea water or sea air.

The paint that stood first in the order of merit on the S. S. *Speedwell* under actual conditions of naval service, was a U. S. Navy experimental coating of two coats of white zinc. Paint at close of the test being in excellent condition, no evidence of corrosion on the metal. (Plate 48, No. 399.)

The second in order of merit, same service, was one coat of red lead and one coat of zinc white. Paint at close of the test about one-half *worn off; no corrosion.* (Plate 48, No. 395.) In both of above cases but little fouling or barnacles.

A paint composed of $\frac{2}{3}$ red lead and $\frac{1}{3}$ zinc white, covered with a second coat composed of plumbago, tallow, beeswax, and lampblack mixed with benzine; the last coat was nearly all worn off, no corrosion. (Plate 48, No. 393.)

Another sample of United States Navy experimental paint of two coats of red lead; paint reported in fair condition, no rust. (Plate 48, No. 397.)

A sample of paint that had been on the bottom of another United States Navy vessel for over a year was found to be well worn, but remarkably clean, but little fouling. It was composed of red lead and zinc white, mixed; definite proportions not known, supposed to have been one-half of each.

Contrary to all expectations, the paints that require to be heated to apply, and which it was supposed that asphaltum entered more or less into the composition of, failed to get a place in any column of merit, and were found quite low down in the other scale. See Plate 11, No. 295; Plate 19, No. 292; Plate 40, No. 412; Plate 46, No. 291. Other samples could be cited; these are enough to show that it requires more than three to five per cent. of asphaltum as the base in a pigment, and some other

Digitized by Google

liquid vehicle, than that in general use to withstand a sea-water test.

THE PITTING OF BOILERS.*

"M. Olroy, a French engineer, gives the results of his recent investigations into the pitting of boilers. Pitting is particularly likely to occur if a water very free from lime is used in clean boilers. When a boiler forms one of a battery and is kept standing idle for a long interval, the top of the boiler is liable to pitting. Steam finds its way into the boiler, and condensing upon the top surface causes bad pitting there. Pure water containing no air does no harm, and steam alone will cause no pitting unless it contains a supply of air. The Loch Katrine water of Glasgow, which causes pitting in clean boilers, contains much gas. The water from many of the lakes in America also produces the same effect; with distilled water the boilers usually remain quite bright. Feed-water heaters often suffer badly from pitting, particularly near the cold-water inlet, and in boilers the parts most likely to be attacked are those where the circulation is bad, especially if such portions are also near the feed-inlet.

"In locomotives the bottom of the barrel and the largest ring is most frequently attacked. The steam spaces are generally free from pitting, unless the boiler is frequently kept standing with water in it. As the water evaporates or leaks away, pitting is liable to occur along the region of the water line, a part which in a working boiler is generally free from attack, unless the longitudinal seam is near that point and forms a ledge where the moisture can rest.

"Pittings take the form of cones or spherical depressions, which are filled with a yellowish-brown deposit, consisting mainly of iron oxide. The volume of powder is greater than that of the metal oxidized, so that a blister is formed above the pit, which has a skin thin as an eggshell. This skin usually contains both iron oxide and lime salts, and differs greatly in toughness. In many cases it is so friable that it breaks at the least shock, falling to powder, while in other cases the blister detaches itself from the plate as a whole.

"An analysis of the powder in the pits shows it to consist of peroxide of iron, 86.26 per cent.; grease and other organic matter, 6.29 per cent.; lime salts, 4.25 per cent.; water, silica, aluminium,

* *Engineering*, October 19, 1894, Vol. LVII., No. 1503.

Digitized by Google

etc., 3.20 per cent. The skin over the pits was found to contain calcium carbonate, 38 per cent.; calcium sulphate, 12.8 per cent.; and iron oxide, Fe_2O_3, 32.2 per cent.; and about 8.5 per cent. each of magnesium, carbonate, and insoluble matter."

The *Verein zur Beförderung des Gewerbfleisses*, or Society for the Promotion of the Useful Arts, Berlin, Prussia, have offered a silver medal and prize of £150 for the best paper giving a chemical and physical analysis of the oxide of iron paints in general use for anti-corrosive purposes, viz.: (1) A description and classification of the paint, based on chemical analysis of the pigment and liquids of which the paint is composed. (2) A statement of the durability of the materials and mixture of the paint, citing cases for examination and future references. (3) Action of the air on such coatings; how affected by temperature, acids, alkalies, salts, vapors, oxidation, etc., separately and collectively. How the iron used for ship-building should be treated; also, for gas and water pipes, and the treatment of the different kinds of iron in the different applications of iron and steel to structural work. All papers to be presented before November 15, 1894.

With the well-known proclivity of the German chemist to probe matters to the bottom, it may be that some of the glamour that surrounds the anti-corrosive and anti-fouling compounds of the day will be dissipated when the above society makes the award and gives to the public the benefit of their labor, which, it is hoped, will cover the ordinary compositions on the market and not those specially coached for the analysis. The mystery that "doth hedge about the king" is very thin compared to that that doth compass the paint-mill, when a mixture of iron oxide, whiting, gypsum, pipe clay, ochre, and other substances as sensitive to and as soluble in water as mill-pond mud, is to be ground with "buffum" oils, umber, and white copperas, as dryers to make an anti-corrosive paint. The before-mentioned United States Navy paint test bears strongly on these matters, and the coming report from the same department, promised by the chief naval constructor, Mr. Philip Hichborn, U. S. N., will do much to inform the engineering fraternity on these important points, aside from the data so freely given out by the glib tongues of sharp selling agents.

The advent of 70- to 90-ton locomotives, in connection with heavier rolling stock and loads in the railway service of the country, is requiring the reconstruction of most of the iron

Digitized by Google

bridges and viaducts that within the past thirty years have replaced the olden-time wooden structures. It is possible that no material increase in the weight of a railway train per foot of track will be made to the present standard to require their substitution by heavier constructions. This being the case, the preservation of them from corrosion, as well as the protection of the immense roof trusses that span the large railway stations, armory drill-rooms, warehouses, etc., becomes a question of extreme moment, as properly protected by paint compounds which thus far appear to be the only practical method, they should last for centuries instead of decades.

But the methods of painting of the present day must be entirely changed to counteract the results that past practice has found to be inadequate to prevent corrosion for even a few years. (1) The mill scale and dirt due to machining processes must be pickled off and the metal left clean and bright ere it receives its first coating; and if the metal can be warmed, even to temperatures due to sunny days, the results will be better and noticeable over applications made on damp and cloudy days or even ordinary weather. (2) The various members composing the truss or structure must receive at least two coats of pure red lead, pyrolusite, graphite, lampblack, or *kindred non-corrosive*, linseed-oil, or asphaltum paints, free from any percentage of mixture with iron oxide or so-called inert pigments, such as the sulphates and carbonates of lime, pipe clay, feldspar, etc., all substances decomposed by moisture, and that can in no manner enter, and never have entered, into any combination with the oil and before-named pigments, but only serve as stuffing to make the application of the paint a little easier for the painters. (3) All bolts that connect any part of the structure should be painted with the selected paint, or with a pure red-lead paint, before being put into the holes, and the threads coated before the nuts are run on and screwed to place. All such bolt heads and nuts must be painted before sweating or rusting takes place, and all hot rivets driven should be scaled and painted while warm, as corrosion once started in these weak points of the structure extends rapidly in the form of pitting. (4) Benzine dryers and bisulphide-of-carbon solvents must be positively excluded from the paint compounds, as well as from the washing down of any dirt due to assembling and erecting the parts.

Digitized by Google

The Frith of Forth Bridge, a structure that contains more iron and steel with a greater number of separate parts and a greater amount of exposed surface, and is subject to a greater complexity of strains, than any construction ever erected for human needs, or that will probably be erected within the next generation of mankind—from its exposed position, subject to driving storms of rain and hail, sea-air, and spray—should have been treated from the first in a manner that would reasonably have led one to expect for it a life of centuries instead of decades, and these will only be had through tribulation and sorrow.

It is noted, in the history of the construction of this bridge, that in many places where the gussets, skew-backs, and other members of the trusses joined each other, pockets were formed that presented places for the accumulation of moisture, and were so obstructive to the free circulation of air for the purpose of drying them out that they were coated with asphaltum, and gutters laid to conduct the water away. These places are danger-points in the structure, and invariably embrace those points where the removal and renewal of the corroded parts will be found to be practically impossible, from the reasons and causes found in the renewal of the track-floor system in the St. Lawrence River Bridge.

There were between 6,500,000 and 7,000,000 rivets driven in the Forth Bridge, weighing about 4,200 tons, and sized from one and one-quarter of an inch diameter to three-quarters of an inch, and from eleven and one-quarter inches long under the head, and closed in nine inches of metal, to one-half inch in the same. Thousands of these large rivets were driven in locations that required special riveting machines to close them, and since the assembling of the other parts of the truss in position, no renewal of a defective rivet or gusset plate is possible. Corrosion at these points, once begun, must proceed unchecked, and will be promptly covered up, but not arrested, by the knights of the paint-brush.

No pickling process was used to remove the mill scale from the thousands of pieces of iron and steel that comprise the structure, the plates being simply brushed with steel brushes to remove the loose scale; then machined, and one coat of hot linseed oil, without pigment, applied over all the oil and dirt due to the machining, flanging, sweating, and other processes. The material was then shipped, yarded, erected, and riveted up, in many cases after months of open exposure to the elements, and, soon as

Digitized by Google

possible thereafter, received two coats of good red-lead paint, *over all the dirt and oils* due to the erection processes, and which the underlying coat of linseed oil and its covered filth afforded an excellent bed or blanket *to prevent any possible adhesion* or bond of the red-lead paint to the metal, even if the "sweating" of the metal was not present at the time of painting to add its quota to the other drawbacks. Linseed oil, boiled or raw, applied without pigment, and dried under usual atmospheric conditions, absorbs water as freely as a sponge, softens up, and after a few hours can be as easily removed from the metal it covers as the skin of a water blister, its bond (and that is a feeble one, without a pigment of some sort to aid it) being wholly gone.

Had the structure been a wooden one, the first coating with the hot linseed oil, even over the dirt of machining processes, would have been a fairly intelligent procedure. It would have *dried in* and not on, and would probably have given a fairly good result. Two coats of oxide of iron paint were then applied over the red-lead coatings, as an additional element to hasten the decay of the red-lead coatings, by bringing into action the elements of free sulphuric acid and iron-rust to harden into a scale of less elasticity than the red-lead paint they cover. Moisture sets both of these elements at work, small blisters form, and the outer oxide-of-iron coatings crack and drag off the red-lead coatings, and the metal is exposed for corrosion almost as fully as if it had not been painted. A structure that cost over fifteen and a half million dollars, that has one hundred and forty-five acres of exposed metallic surface for protection from corrosion, and that requires from ninety to one hundred tons of paint to cover it with one coat, should have received a more intelligent and comprehensive treatment for its preservation.

It has been decided by the Bridge officials to keep a corps of painters continually in service and to practically repaint it every three years in its early life, until time has developed the weak or danger points from corrosion, and what methods and compositions other than the above-named paints are needed for the preservation of this important structure.

I believe—with the exception of the red-lead paint, and this was wrongly applied—that every step in the methods adopted for the preservation of this bridge was radically and entirely wrong, and, before fifty years have passed, that corrosion will be so strongly developed in all parts of the structure that a drastic plan of

Digitized by Google

burning, scraping, and pickling all the paint compounds off will have to be pursued, and when the metal is scoured to the bright, regardless of expense, a paint can be applied with some chance for its being effective against corrosion, but no oxide of iron will enter into its composition.

In paper No. 598, read at the Montreal meeting, June, 1894, I pointed out the mistakes that had been made in the protective methods employed for the Niagara and Brooklyn suspension bridges; and as opportunity occurs I find, on examination of some of the late immense roof constructions, the same disregard of the conditions that underlie the corrosion of iron, and which are so fairly defined at the present hour that it seems almost calamitous that such serious and costly mistakes could ever be duplicated.

In conclusion, it may be cited that a number of torpedo boats of the French Navy, that have been constructed within the past ten years, and that have not made a thousand knots of sea service, have been found to be so corroded at the water line, though well painted from the first with anti-corrosive paints, the kind not stated, that they have been condemned for service; while other boats of the same class that have never been in commission, but have been laid up under cover, have, as the report says, "eaten their own heads off by corrosion," and are condemned for the same cause. In these cases the corrosion has been in progress underneath the paint covering, and showed but little signs of its extent or progress, until the plates were so corroded in spots, many of them of large area, that the hammer used in testing the plates broke through the skin of the boats under the effect of blows that would not drive a ship spike into a pine block.

At the recent annual convention of the American Institute of Architects, in a discussion on the use of iron and steel in the construction of modern high buildings, it was reported by one of the leading architects in the United States that the iron floor beams removed by him from the old *Times* building, though in use only thirty-five years, were rotten with rust. They were inclosed in eight inches of brickwork, and had been well painted with oxide-of-iron paints and protected by asphaltum coverings. The iron came off in strips, clearly showing that the rust had followed the lamination of the iron; the web of the girders being so rotten as to be easily broken by the fingers.

Digitized by Google

The Victoria Bridge across the St. Lawrence River at Montreal has become so seriously corroded, though under constant care by the engineers and a corps of painters, that the whole floor-beam structure required renewal, it being found impossible to repair the old beams, as the cutting out of one rivet was followed by the loosening of all those in its immediate vicinity, all being pitted around the heads and points, and in many cases the body of the rivet and the surrounding metal showed corrosion to a marked degree. The renewals comprised 656 new floor beams 15 feet 9 inches long, weighing 2,100 pounds each, placed on 7-feet centres between the old ones that it was found impossible to remove. From the present outlook, this important structure will be either condemned and taken down, or else will fail from corrosion and fall into the river within a century from its construction. The mill scale was left on the plates as they were originally put into the structure; no care was taken to paint the plates before rusting, and the successive coats of iron oxide paint have been applied over each other without scraping the old coatings off, until a flake of paint coating shows the successive coats, alternated with rust, as plainly indicated as the leaves in a book.

DR. ANGUS SMITH'S ANTI-CORROSIVE WATER-PIPE COMPOUND.

The practical effects of the application of any anti-corrosive or protective compound to water-pipes or other ferric bodies buried in the earth are necessarily slow to determine, but occasionally a result is reached that is worthy of record.

At a late meeting of the New England Water Works Association, Mr. Peter Milne, engineer in charge of the extension and distribution of the Brooklyn, N. Y., water supply, reports: That a thirty-six-inch water main, laid thirty-five years ago, was uncovered for some distance for the purpose of making a connection, and was found to be in almost perfect condition externally, and but few tubercular or other deposits being on the inside of the pipe, where generally the most trouble is produced by corrosion, or the formation of rust cones.

The pipe was of fine, close-grained iron, cast in Scotland, and had been treated with Dr. Angus Smith's water-pipe process and compound, which consists in heating the pipes or other bodies in a bath or furnace to 500° Fahr., and then immersing them in a mixture of coal-tar, pitch, linseed oil, and resin, heated to 300°

Digitized by Google

Fahr. In this mixture the castings remain until they have *cooled down* to a temperature of 300° Fahr. The preliminary heating of the castings, or other objects, to 500° Fahr., or approximating degree, is the prime factor for success.

It goes without saying that a composition of this character, that has borne this test, must obviously be a good one to apply to ferric bodies above ground, for the purpose of preventing corrosion; and if objection is made to its sombre appearance or want of color, it may be noted that this composition will take over it, and bond to it, any lighter or tinting color desired, when *the base* of that tinting color is red lead, mixed with either raw or boiled linseed oil, preferably the latter.

Efforts to ascertain the formulæ used by Dr. Smith in the preparation of his water-pipe compound have resulted in so great a variety of recipes that but little dependence can be placed upon any one of them being the one sought for, the temperature of the preliminary heating of the pipes before immersion in the bath varying from 700° Fahr. down to 200° Fahr., and the variation in the proportion of the ingredients of the composition was equally startling.

Mr. Charles Hermany, engineer of the Louisville, Ky., water works, writes, in answer to queries upon the corrosion of water-pipes, and Dr. Smith's compound:

"As regards injury or destruction of water-pipe by rust, I have had no startling experience or observation, inasmuch as it has been upon rare occasions that I have found pipes destroyed or rendered useless by rust. As to Dr. Angus Smith's coal-pitch varnish for protecting cast-iron pipe against rust, and the best formulæ for its application, I regret to say that I cannot tell you where to find it.

"Some years ago, for a number of seasons in succession, I strove diligently to coat water-pipe according to his formula, as given in James P. Kirkwood's book on the Brooklyn Water Works, published somewhere about 1866, and to my utter surprise and disgust found that I was unable to coat the pipes any better than is done in the ordinary way by the pipe foundries, which ordinary way is not much better than a blackening process by the use of ordinary coal-gas tar. In expressing so disparaging an opinion about this method of coating pipe, I am nevertheless constrained to say that pipe taken out, which had been treated in this ordinary pipe-foundry fashion, I have found some of them to be so perfectly

Digitized by Google

protected that in the course of from eight to sixteen years rust had not attacked the iron at all, the coating being as perfect and efficient as when first applied. Such a result, however, is an exception and not a rule, for in the majority of cases where I have had opportunities for examining the pipe, the coating on the inside of the pipes was all gone, and so far as any opinion could be formed from an inspection thereof, it had been of little or no use in prolonging the life of the pipe.

"The great difficulty I experienced in trying to apply the coal-pitch varnish as specified by Dr. Smith, I found in heating the bath and the pipe up to the required temperature (300° Fahr.). At this temperature the coal-pitch varnish, under atmospheric pressure, becomes simply unmanageable, by approximating closely the condition of volatilization, and going everywhere except where you want it, and the immersion of a hot pipe of somewhat near this temperature into the bath of coal-pitch varnish resulted invariably in a thick, apparently unbroken, and exceeding brittle coating, so brittle that it would crack in the ordinary handling of the pipe; and therefore, on account of the failure of the application of the Smith formula, I have since allowed the pipe foundries to do the coating in the ordinary and somewhat careless way, simply because I know of no better. I do not know what the tension of vapor or steam from coal pitch at a temperature of 300° Fahr. would amount to, but it would hardly be less than that of water, which gives a pressure of 53 pounds to the square inch, so you can readily perceive that to maintain such a temperature in atmospheric pressure is simply impracticable.

"I mail you herewith a copy of the Twenty-fifth Annual Report of this company; on pages 22 and 23 you will find a brief account of protecting the inside of the stand-pipe with hydraulic-cement mortar. This was an unqualified success in protecting the pipe against further corrosion, as was proved at the time of the destruction of the pipe by the tornado in March, 1890, when, upon examination of the fallen pipe, it was found that the cement lining applied was in perfect preservation, and the attack of rust on the iron completely arrested thereby.

"The inlet pipe to this company's pumping station, put in operation in 1860, is of wrought-iron plate three-eighths of an inch thick and 50 inches in diameter, and about 300 feet in length. Prior to the completion and use of the new pumping station, there was never an opportunity for the careful examination of

Digitized by Google

this pipe as to its condition for further service or durability, until during the past season, when, upon a thorough examination, it was found to be very much and quite irregularly eaten up by rust on the inside. In many places fully half the thickness of the iron was eaten away, and much more than half its strength for resisting external pressure at these points destroyed. The irregularities of the rust being considered, it will not be proper to say that half the strength, or as much as half the pipe, has been destroyed, because in a good portion of the pipe the metal did not seem to have been materially injured by rust. The irregular, splotchy, and spotty manner of corrosion is to me wholly inexplicable, for the interior of the pipe was attacked and rusted in a manner as though the surface had been inoculated with a poison, which did not extend over the entire surface, and left parts with the original mill scale not destroyed.

"This pipe was cleaned by scraping off the rust and brushing and washing off the soft, plumbago-like coating, and then it was plastered on the inside with hydraulic-cement mortar, applied to a thickness of one-fourth to three-eighths of an inch, this work being done by ordinary house plasterers. Imported Portland cement was used for about two-thirds of the length of the pipe, and native Louisville cement for the remainder, the change from the Portland to the Louisville cement being occasioned by the slow setting of the former and indifferent adhesion to the iron, as compared to the Louisville cement, which set promptly, and was applied with much less trouble and delay than with the foreign cement. With this cement on the inside of the pipe, it will last for an indefinite length of time, inasmuch as the exterior of the pipe does not seem to be affected by rust, it being incased by river silt, which is approximately a perfect protection against the attack of rust."

THE BOWER-BARFF PROCESS.

The merits of the Bower-Barff process for producing a rustless coating on iron and steel are receiving more attention than was at first manifested in the process. Its application is no longer confined to small articles, but the better class of wrought-iron constructions, railings, elevator cages, and even the heavier and more important parts of modern iron buildings are receiving such consideration from architects and builders, that it is no longer necessary to refer to European practice for evidences of its value.

Digitized by Google

The use of the process has been steadily increasing for the past ten years, the principal cities of the United States being now provided with furnaces for the treatment of articles of any reasonable weight, size, and length. The wrought-iron railings and fittings of over one hundred and fifty of the largest and finest appointed office buildings in the country attest its merits.

In the new Congressional Library Building at Washington—one of the largest and finest buildings in the world—the whole range of bookcases and shelving, and all the visible iron and steel work of the construction, is Bower-Barffed, and all of the balance of the iron and steel work is coated with red-lead paint—oxide-of-iron paints being specially prohibited from use in any part of the construction. Thus are brought together under one roof the two best known methods for the preservation of iron from corrosion, the comparative merits of which will be for the coming generations of architects and engineers to decide.

A late improvement of the Bower-Barff process, called the "Wells process," consists in forming the black or magnetic rustless coating, Fe_3O_4, by one operation in a thorough and complete manner, by subjecting the articles to be treated, when brought up to the required temperature, to the action of mingled steam and carbonic oxide gas, instead of the usual Bower-Barff process of the alternating action of hot air, producer gas, and steam; this latter process forming at first Fe_2O_3, red rust, or forge-scale, and then reducing this to the required coating, Fe_3O_4.

The cost of applying the process must necessarily vary with the size, weight, and other characteristics of the article to be treated. For builders' hardware and that class of articles called shelf goods, domestic articles, etc., the cost is about five per cent. of the net cost of the goods to the manufacturer. Wrought-iron grilling, office railings, and the better class of scroll and fancy work cost about two cents per pound. Wrought-iron steam and water pipe is coated for about the same expense per pound as is required to paint it. A further benefit to this class of articles is had in the fact that the inside of the pipe receives at the same time the same coating as the external parts. Wrought-iron I-beams, channels, and other shapes entering into building constructions can be treated very cheaply; the principal expense is first cost of the furnace; the actual operating expenses are very small—fractions of a cent per pound.

Digitized by Google

It has been found, in articles treated by the Bower-Barff, also by the Wells, process that a permanent elongation and increase in size, amounting to one-twenty-fourth inch per foot, is had, which must be allowed for in the fitting up if the pieces are to be assembled; otherwise, there appears to be no change in the strength, other than due to annealing processes.

The Bower-Barff Rustless Iron Company, No. 31 Nassau Street, New York, have issued lately a pamphlet, No. V., describing their process, in connection with the W. T. Wells process, and giving a list of the principal buildings in the United States where their work has been applied to a greater or less extent.

An instance of the almost imperishable nature of this magnetic oxide-of-iron coating is found in the famous wrought-iron column of Delhi, India. This column is remarkable not alone for its beauty as an object of art, but also for the constructive skill of the earlier race of iron-workers. It must have required centuries of practice to have acquired the knowledge and manual skill to forge and erect it.

It is of wrought iron, sixty feet in height, sixteen inches in diameter at the base, and tapering to twelve inches at the top, with an enlarged and ornamental fluted capital, and was forged solid, the capital ornaments chipped to form and finish, the chisel and file marks thereon being distinctly discernible. Its weight is approximately seventeen tons, and it was erected 900 B.C. The surface of the whole column is practically free from rust, except where modern vandalism has defaced it, even to the extent of its affording a target for her Majesty's artillery officers to exercise their guns upon. It had been treated by the magnetic oxide-of-iron process before erection by its Indian forgers, and it stands to-day one of the most remarkable examples of ironwork that has ever been constructed, and, with all our boasted western or latter-day progress in the arts and sciences, could not have been duplicated previous to the year 1860 in the United States, nor in the whole of Europe, by more than a half-dozen forge firms. Much may be due for its preservation from corrosion, to the wonderful climate of India, but the fact remains that the Indian forgers recognized that some means for its preservation was needed, and they applied that method that observation had taught them was the most effective, and which, no doubt, was the slow growth of the centuries that passed while they were acquiring the mechanical and directive skill that rendered its construction possible.

Digitized by Google

DISCUSSION.

Mr. Henning.—I would like to call attention to an apparent contradiction on page 372. We have so much to take out of this paper that anybody can be suited. A great deal of attention is given in the paper to the more rapid corrosion of unstrained than strained material, but on page 372 it is summed up in the following words: "The test made with specimens, after being submitted to torsional stress, representing a bar that had been twisted through an angle equal to half a revolution, and prepared similar to those in the tensile tests, showed results identical with the tensile strains. In every instance the unstrained metal was the electro-positive element, and was corroded more rapidly by the sea water." In the next paragraph it is said: "This conclusion was further supported by tests made with iron and steel plates, when a flat piece was compared with one bent into an U or semicircular trough; the bent plate in each case proving to be the one most easily acted upon by the solution." Now if the bent plate, which was the strained plate, was most easily acted on by the solution, that would be the most easily corroded plate. There are a few other similar contradictions which ought to be eliminated or corrected.

Mr. F. H. Boyer.—I would like to say a little of my own experience in Boston in putting salt water through iron pipes. We have a pipe line which is 1,800 feet long, through which we keep continually circulating salt water; and in two and a half years, without any deterioration of the thickness of the metal, the iron has become so soft that we will have to replace it. This apparently is not corrosion. The entire thickness of the metal is there, but the iron changes to the condition almost of plumbago. You can take a knife and make a hole right through.

The Chairman.—Is that cast iron?

Mr. F. H. Boyer.—That is cast iron, made down somewhere in Pennsylvania. I do not remember the maker's name. Samples have been taken to the School of Technology. It leaves us with a very fine prospect of having to renew 1,800 feet of 12-inch pipe. I have, around New York, in past times, had experience with salt water working on cast iron, but never such an experience as this. I would like some explanation, if there are any of the members who have had a similar experience.

Mr. Robert Cartwright.—This is a subject which has occupied

Digitized by Google

engineers for years without yet having a solution. But in attending this last session of the Society I have been led to think that we are arriving at a solution. It is very simple to cure all of this now, as I understand. Of course, I am not a chemist, and do not speak of my own knowledge. All that is necessary now is to take a sample of your iron, submit it to a chemical test, and you have got the cure. You want to know how much carbon, how much silicon, and everything of that kind, before you make your casting. At the same time the corrosion and the deterioration of pipes have kept on till now. I say, I hope we have arrived now at a time when we are going to cure all that. I am practical, not theoretical. When you speak of the softening of the iron by the sea water, so that you could easily bore a hole through it, I recall that I have seen a propeller wheel which I could whittle right through with my knife. That was very easy to cure. We cured it in a very short time by putting on a new wheel. Now, had we known what we are coming at to-day, we would only have had to know how much silicon to put in, how much carbon to put in, and that would have cured the whole thing. You take a steam-chest, where they use tallow as a lubricator—it will do the same thing. You put it in sea water, whether it is cast iron or wrought iron, and one wheel will run as long as the ship runs and not be affected at all, while another will all go like sugar. Why is it? This chemical analysis is going to give the whole secret of it. I do not wish to decry science. But I will take two of the best irons that you can bring to me, and I will bring out of the cupola a product that you cannot use. There is as much in the manipulation of pouring, of heating, and of fluxing cast iron, as in all of your chemical analysis. I have got ten tons in a ladle. We have put in the different ingredients, so much silicon and phosphorus and manganese, and all that. I have my ten tons of iron, and I can tell you when to pour it, by observation. Many times I have let my iron stay an hour, two hours, to get to the point at which ocular demonstration tells me it is time to pour. I tell you that science is not going to do the whole of it. Why is it that we have these tremendous castings coming out, and the man who makes them, and is responsible for them, does not know what carbon is, or phosphorus or silicon is, but, gentlemen, he brings the good casting out of the sand every time. Your science is not worth a rush without the practice. My friend Kent the other night sounded the key-note of the

Digitized by Google

whole thing. We had here two tests of engines, one with the modern high pressure of 180 pounds of steam, compounded, compared with a 40 pounds pressure, old style, and he said the test was worth nothing. It is all useless putting this array of figures on the board, and taking the time of us engineers to listen to it, unless you subject the engines to the same trial and under like conditions.

Mr. H. B. Roelker.—I have seen in the newspapers, and have heard privately from engineers, that similar corrosion has taken place in the iron sewer pipes and water and gas pipes in Brooklyn since the development of electric power in that city, and very probably the same cause may explain the corrosion of the pipes in Boston. We know that on coppered steamers such corrosion of exposed cast iron will occur every time, without exception, in the length of time mentioned, or a shorter time. When a cast-iron propeller and stern bearing are put on a coppered steamer, the iron is eaten out, and the black-lead remains, preserving the original shape of the cast iron. I have often seen that after three years' time no iron was left in a propeller blade of 1½ inches thickness, but the original form remained, composed of black-lead. In that case it is galvanic action, and very probably it is galvanic action in the case of the gentleman's pipes. Soft iron is generally considered to disappear much quicker than hard iron.

Mr. W. F. Durfee.—This discussion has called to mind an experiment of my own which was made some years since, in the reduction of iron from its ore in crucibles. Some friends of the concern with which I was connected at that time had discovered a wonderful deposit of magnetic iron ore, and nothing would suit them but seeing some wrought iron made from that ore. They wanted to know if I could do it. I said yes, I can reduce enough of that ore in pots to make a heat in the puddling furnace, some four hundred pounds, and I can puddle that, and make you some wrought iron. They made an arrangement with me to do it. I think it was the largest operation of reducing iron from the ore in pots that was ever done. Every one of those pots was charged alike; the same quantity of ore, the same quantity of charcoal, the same quantity of flux, and the conditions were made as uniform as possible. The pots remained in the gas melting furnace about the same period of time, and were taken out and allowed to cool in the same way, and the button of iron taken

Digitized by Google

out of the bottom of the pots, and the majority of those buttons were good gray iron. There were some half a dozen, however, that, when broken (we broke them all), were as black as tar; they seemed to be supersaturated with carbon; at least, that was the interpretation that I put upon their appearance. You could whittle them like the iron that has been talked about here. I did not have an analysis of any of those buttons made, but I was curious to know what would be the result of remelting these supersaturated buttons in crucibles. They were put into a crucible all together, and melted. The result was a good gray button of cast iron. Just the remelting operation seemed to remove the excess of carbon that was in them. I have seen a few such samples of iron produced in the ways that have been mentioned, but I have never seen any such iron produced by the reduction operation, except those buttons. Just exactly what the conditions were that produced that result and failed to produce gray iron in those buttons, such as was produced in the other buttons, of course, it is impossible to say. But the experiment shows that when all the conditions are apparently the same, that there will be sometimes accidental results obtained, which will be quite different from the majority of results under apparently the same conditions.

Mr. John Platt.—I think the experience of many of you will lead you to think that what was mentioned as electrolysis in the pipe in question will not be the difficulty to look for. It is a well-known fact that salt water under any velocity acts very readily on some kinds of cast iron; so much so that all engineers, in designing machinery for this purpose, have almost invariably used some composition; and this must be due to the fact that the different compositions of the iron come into play, and one never knows exactly what is going to occur. Some irons, we have been told, will not be acted on by salt water at all. Others, we know, will; so that we are not at liberty to make use of this material for such a purpose. If the processes brought out in this paper will lead us to any results by which we can use iron for such a purpose, I am sure they will be of the greatest benefit to the engineer.

Mr. Durfee.—I will supplement my remarks with the statement that I have had some experience with the use of cast iron in connection with salt water, and I have noticed that if the castings were made very soft, they would perish very rapidly. A

Digitized by Google

casting, to be used in salt water, should be of hard, dense iron, of course, not brittle, but a very close-grained iron, inclined to be hard; and such an iron will resist the action of salt water very well indeed.

Mr. Wm. Kent.—There is one paragraph in this paper to which I wish to call particular attention: "At the recent Annual Convention of the American Institute of Architects, in a discussion on the use of iron and steel in the construction of modern high buildings, it was reported by one of the leading architects in the United States, that the iron floor-beams removed by him from the old *Times* building, though in use only thirty-five years, were rotten with rust. They were enclosed in eight inches of brick-work, and had been well painted with oxide-of-iron paints, and protected by asphaltum coverings. The iron came off in strips, clearly showing that the rust had followed the lamination of the iron."

Now, for the last five years in New York we have built a great number of buildings with just that construction—iron hidden in eight inches of brick-work, the iron being painted with oxide-of-iron paints, and protected with asphalt covering. It is very important for us to know whether this iron which we are burying out of sight is going to corrode or not. It is totally opposite to the evidence on the other side of the question, that iron in some locations has been in existence for thousands of years without rusting. But if it is so that this can happen with a well-painted, asphalted iron beam, it is an extremely important matter for the safety of life in New York and other large cities. I hope this question will be taken up by architects and civil engineers and others having to do with the erection of these large buildings.

Mr. Durfee.—Following out the thought of Mr. Kent, I wish to speak of a construction that has got to be somewhat popular. I believe it is the subject of a patent—I have been told so, but I do not know who the patentee is—that is, the making of a compound beam of two "flitches" of timber, with a plate of iron bolted between them. That construction is, to my knowledge, over fifty years old. A piece of plate iron bolted between two timbers, that are almost invariably green and damp when they are put into a building, is very liable to be attacked with rust, which will continue until all the strength relied on from the metal in such a beam has departed by oxidation. Moreover, if the timber is green it will be liable

Digitized by Google

to rot very rapidly in contact with the iron, as the moisture cannot really escape.

Mr. Cartwright.—In relation to the surface protection of plates, I might refer to the new *Ironsides.* She had her protective armor, and it was noticed that just so far above her line of immersion as her plate was immersed below the salt water, just so far corrosion took place. Now those plates were kept painted all the time, and yet the galvanic action—presumed to be—corroded that plate. It seems to have the same effect that Mr. Durfee speaks of in that wrought-iron plate between the wood to form a girder. It is the worst construction that can be made, in my opinion. In my experience of forty-five years of laying pipe, and so on, there is no place where a pipe will corrode quicker than in a shipyard. You put a pipe through the oak chips of a shipyard, and it will go very quickly—quicker than in any other place I know of—galvanized, painted, or as you please. I presume it is due to the acid of the wood, as Mr. Durfee justly remarks. Here is a damp piece of green wood that brings this acid into connection with the plate. This rust is cumulative. It doesn't stop. When it once gets an entrance it will disintegrate the whole plate after a while. Why it is, that is for you chemists to find out, not for us practical men. I do not care whether it is done by science or by practice.

Mr. Platt.—When you say shipyards, you mean where they build wooden ships, I suppose?

Mr. Cartwright.—Where they build wooden vessels.

Mr. Samuel McElroy.—Mr. President, I would like to say that this question of corrosion, and especially the corrosion of cast-iron pipes, has been the study of hydraulic engineers for more than a generation. But it is a law, and not a contingency, and our experience goes to show that it depends first on the quality of the metal, then on the exposure, and also on the precautions used. For a great many years one of the most valuable protectives of iron exposed to acids or weather action, or whatever it may be, has been hydraulic cement. In the suspension bridges it was found that the most valuable material in which the wires could be buried is hydraulic cement. The French engineers for a long time coated their water pipes with hydraulic cement. We find this corrosion everywhere, and water pipes exposed to salt water are particularly subject to it. In New York, along the docks, three or four years is the life. The ordinary life of a cast-iron

Digitized by Google

pipe is twenty or twenty-five years, as a rule. This subject opens a wide field, impossible to discuss in the limited time we have, but I believe it is a question of quality, a question of exposure, a question of palliation or prevention.

Mr. E. F. C. Davis.—There is probably no place where corrosion occurs more rapidly than in an anthracite coal mine. There the water is permeated with a certain amount of sulphuric acid, and sometimes with a small portion of nitric, and it has always been found that pumps and pipes under ground corroded very rapidly when made of cast iron. I have seen some examples of cast iron preserved for a great many years by simply coating it while warm with a mixture of one-half coal tar and one-half asphaltum. I have seen pipes submerged in mine water for over twenty years, in the case of an abandoned mine, and it was found that the casting was in the same condition as when it went down there, that is, utterly free from the action of acid. This coating seems to be imperishable so long as no mechanical action destroys it. It answers all the requirements, where there is no actual cutting action. That answers the purpose for the outside of the pipes, but where the water flows through them it will cut that away. There they find it quite practicable to preserve the pipes by giving them a coat of this coal tar and asphaltum while warm, then lining them with five-eighths-inch or three-quarter-inch of pine staves, and the swelling of the staves keeps them in position. That is a common method in use in the anthracite regions. The action on cast iron is exactly like what our friend from Boston mentions. The iron seems to become turned into a sort of graphitic compound. The volume remains, unless it has been positively cut away by some mechanical action. But it is rather treacherous in that respect, because the iron does not disappear, but simply loses strength and weight.

Another way in which it has been attempted to prevent corrosion, where it is not practicable to line the inside of pump bodies and pump chambers with a wooden lining, was to coat the cores with a paste composed of silica and carbonate of soda. I have made a number of experiments of that kind, and found we could get a coating of about a thirty-second of an inch, sometimes thinner, sometimes thicker. That coat, although very thin, was simply an increase of the ordinary scale that comes on cast iron, and it would, in many cases, double the life of the casting. It is now used to some extent, and I am surprised it is not used more than

Digitized by Google

it is in the anthracite regions. It does not cost anything to speak of.*

Mr. J. T. Hawkins.—Mr. President, I would like to enter a mild protest, if I may call it such, to what seems to have been an attempt, unintentional perhaps, to belittle the chemist in this discussion, and I would also like to obtain a little information from the same gentleman who made that belittlement. Perhaps he can give the information to me and to the rest of us. We know that the metallurgic chemist has done wonders for us in the last decade or two, and but for him we would not to-day have what is known as Bessemer steel. We know that in the production of Bessemer steel there is a very critical period, which is determined chemically, at which the operation is arrested. That is the critical period in its process. The gentleman who thinks so little of the metallurgic chemist tells us that he can take a ladle of cast iron when it is melted, and watch it for one, two, or three hours, and there is something in his inner consciousness that tells him just exactly when he ought to pour it. Now the chemist tells us in the case of Bessemer steel in a way that we can all follow; and I would like the gentleman to tell me, as an engineer who has watched and tried for a good many years to get good results in making certain kinds of castings, without having been able to quite overcome the difficulties, how he determines this period, so that we may do it. Some said my difficulties were because the iron was not poured at the right time, was not the right composition, the cores were not made right, etc., but none of the explanations exactly hit the case. I thought perhaps my friend might be able to tell me just exactly when or how he finds out—just exactly what it is in him that tells him when to pour that ladle of metal so as to get good results.

Mr. Cartwright.—I offer an humble apology if any word I have said has been with a view of belittling chemical science. I have the greatest respect for the chemists, and the greatest respect for their research. If anything I have said conveys the impression

---

* 112 pounds Silica.
44 " Calc. Soda Carb.
24 " Calc. Carb. precip.
4 " Acid Boracic.
} Mixed and thoroughly pulverized.

Coat the core or mould with plumbago facing, and apply the enamel as a powder or paste to the thickness required.

Digitized by Google

that I belittle it, I did not mean anything of the kind at all. Now this is practice, gentlemen, this is not theory; and I think I will be corroborated by every man who has run a cupola. I do not mean by that a man who has been superintendent of an establishment that had a cupola, but a man who has had to go in and cure a sick cupola, with an incompetent foreman to operate it. That is what I mean. Now, we all know that there are certain manipulations; you may say they are almost intuitive. I am not the only one that knows it. Any one who pours large masses of iron knows when his melted iron comes out into his ladle, and he sees it by ocular demonstration. I was shown it by those who taught me, and I cannot explain it, but I can show it to you. Those things you cannot get by chemical research. It is only by ocular demonstration. When Bessemer steel was first started in this country they sent over to England and got a man who kept his eye on the flame, and said, when the flame assumed the right color, "Now—this is the time to pour off." They tried spectrum analysis and everything of the kind to put that man out, but they didn't do it. In Cleveland they put a man to watch it, and when its color demonstrated that the experience of the other man told him it was right, then pour the steel. That was done. The high-priced, imported man was soon let go. Now, is there any trouble in all these Bessemer works to know by experience when the carbon is all blown out of the iron? Not at all. Now, these are matters of experimental or practical research, not theoretical study. Mr. Bessemer's idea of blowing out the carbon and charging so much afterwards of the *spiegeleisen* was a different thing altogether, but Mr. Bessemer has not made all the steel that has been made, and he has not made all the improvements that have been made. They have been made by practical men. Now, I take it back, if a word I have said conveys the impression that I want to belittle science. I do not care what it is, but when I see the scientist make the most egregious mistakes in producing work, when a practical man that knows nothing about the science of it brings out good results, there is a reason for it. I am afraid we are like the German student with theology. He gets along to a point where he conceives the thing so fine that he finally concludes that there is no Supreme Being. I think we are chasing a myth. Who ever that has run a country machine shop, as I have, knows anything about starting a chemical laboratory and making a blue print? You have got to be practical. Science and practice go together.

Digitized by Google

*Mr. M. P. Wood.**—I note Mr. Henning's remarks upon a contradictory paragraph in the record of Mr. Andrews' experiments, page 372, on strained and unstrained metal. In the galley proof sent me, "*the most easily acted upon*," etc., was corrected to read, "*the least easily*," etc., but in the rush to get the papers out for the customary distribution two weeks before the date of the meeting, that correction and some others got left.

Mr. Boyer's experience with the twelve-inch cast-iron pipe is remarkable for the rapidity of the change from iron to plumbago. Under ordinary circumstances that thickness of pipe should have lasted about twenty years. I can only attribute this rapid change to the moral depravity of the founder who cast the pipe, which must have left its impress on the materials inanimate; and I think the analysis of the pipe samples will show a poor grade of cast iron, in which a large percentage of burnt grate-bars and poor scrap iron entered, instead of a firm, close-grained iron. I hope Mr. Boyer will interest himself enough in this subject to send, for record in the Transactions of our Society, the analysis of this pipe iron. Something in this case is no doubt due to continued changing of the salt water inside of the pipe, the current carrying away the particles of free carbon that all cast iron has in addition to the carbon combined with the iron, any slight corrosion only rendering the carbon particles more easily detached from the metal, and the pressure under which the sea water was being forced through the pipes would also search out these particles of carbon and Fe_2O_3, and expedite the change. It has been noted that cast-iron piles and other castings corrode more quickly in running seas or where there is a constant change of the sea water going on; also, that similar cast-iron objects buried in slime and sea-water mud are not corroded so rapidly as in the former case. I hope Mr. Boyer will also give us the detail of the means he has taken to prevent a renewal of this experience of short-life pipe, that those who come after us in the counsels and debates of the American Society of Mechanical Engineers may have a record, if not of a success, of at least a failure, which is many times of equal importance to our craft.

Mr. Milne's experience with cast-iron water pipe at Brooklyn, N. Y., and Mr. Hermany's at Louisville, Ky., given in the body of this paper, though conflicting in character, and uncertain as a guide to predict a future result therefrom, are none the less instructive, and show us how important it is to keep accurate

* Author's closure, under the Rules.

Digitized by Google

records of the details of engineering work in all stages of its progress, if not for the enlightenment of the engineer in charge, at least for the benefit of his employers, and the succeeding engineer in charge of the work.

Attention to the little things often decides the question of success or failure of many engineering enterprises. I cite a case where ten miles of ten-inch diameter bell and socket cast-iron pipe was laid, thoroughly calked, and tested by air pressure, covered in, and pronounced a highly creditable job, which even our practical friend Cartwright would have admired; yet, when the line was put into duty of piping natural gas, it went all to pieces, so to speak, inside of two months, and the entire line of pipe was dug up, joints drawn, cleaned, and relaid, at an expense greater than the original cost of the whole line, pipe and all.

The difficulty was, that coal-tar-coated hydraulic pipe had been laid by the contractor, and allowed by the engineer of the pipe-line gas company. The gas softened the coating of the pipe; that on the inside of the pipe was all cleaned off, but the coatings covering the spigot ends and inside of the bells softened and oozed with the pressure of gas in the mains, and acted as a lubricator for the pipes to go and come on at the changes of temperature and pressure of the gas, and no amount of calking could keep the joints tight. Had the engineer in charge of the work been even a poor chemist, he could have foreseen the cause of failure and avoided it; the cause being quite independent of the composition of the iron in the pipe, or the temperature at which it was poured; the personal equation of the latter, in Mr. Cartwright's opinion, being a greater factor for success than the former, with which opinion I cannot agree.

Chemistry alone may not be able to solve the problem of the corrosion of iron, but it will do more than the iron founder, who, out of a hundred or more castings, should he find one or more that resisted corrosion to greater or less degree than the others, or that was stronger, poured better, puddled or machined better, or had one or the other of the many qualities sought for in cast iron, or in its advanced stages of manufacture as wrought iron or steel, would have to resort to the chemist and his analysis to determine wherein the differences lay, even if the chemist disregarded the moments of inertia, the modulus of elasticity, the coefficients of expansion and contraction, as zealously as the most practical of all the iron founders since the days of Tubal Cain.

Digitized by Google

Mr. Roelker suggests that the cause of the corrosion of the Boston twelve-inch water pipe was electrolysis, due to electric currents from the street railway systems. This cause could not have affected the pipe so uniformly as cited, and would have more likely caused failure in the pipes in spots, rather than a collapse of the entire line.

In the discussion of this paper, reference is made to the fact that pieces of armor and ancient weapons have been found after the lapse of hundreds of years, untarnished by rust. In explanation of these instances of non-corrosion, it is stated that these articles have invariably been found in places where the air surrounding them was pure and dry, and practically unchanged from the time of sealing them up until they were found in modern times; that they were bright and polished, and had no mill or forge scale upon them to inaugurate the corrosion process.

On pages 352 and 353 of this paper the deleterious action of mill scale to inaugurate and perpetuate corrosion is fully shown. The difference between this corrosive agent, mill or forge scale, sesquioxide or peroxide of iron, $Fe_2O_3 = 70$ per cent. of iron and 30 per cent. of oxygen, and the black or magnetic non-corrosive oxide of iron, $Fe_3O_4 = 71.9828$ per cent. of iron, and 28.0172 per cent. of oxygen, is very small; but it is enough to determine that the first is one of the most perishable metallic bodies known, and the other one the most imperishable.

The reduction in the crucible or blast furnace of either or both of these oxides of iron to a metallic state, for commercial purposes, has nothing to do with the corrosion of the product, which is due to the access and accumulation of oxygen instead of carbon compounds.

Instances of the protective nature of hydraulic cement were given in the first paper,* and are otherwise cited on pages 388, 389, and 412. Much depends upon the quality of the cement used, the method of its preparation, and how quickly it is used after being wet up, and before it has "set" in any degree. If broken up and used after "setting," it is as worthless for protective or bonding purposes as cornmeal. In any case of its application due attention should be paid to remove the forge or mill scale, as the bond of the hydraulic cement to the iron it covers can in no case be superior to that of a good paint; the con-

* *Transactions of the American Society of Mechanical Engineers*, Vol. XV., No. 598.

Digitized by Google

dition that would scale the cement would probably peel off the paint and leave the metal exposed. Either of these injuries to the protective coatings will be less liable to occur if the coatings are bonded to the metal direct instead of to a semi-loose intermediary body of forge scale.

In regard to the methods adopted for the protection from corrosion of the iron structure or cage which is so prominent a construction feature in the modern sky-scraper office building—many of them twenty stories high, others proposed of thirty stories, and even fifty stories is not considered as a limit to the height unless the elevator service is found inadequate, as each elevator can only supply about fifty offices—but little can be said in favor of these methods, and everything in condemnation. Since the December meeting, where the effect of corrosion upon the iron beams used in ordinary architectural work was presented (p. 409) for the consideration of this Society, the leading architects of New York have been interviewed by the *Tribune* (Sunday edition, December 30, 1894), the consensus of their opinion being expressed by one of the prominent members as follows:

"With regard to the strength of the steel cage constructions, both as to wind strain and other disturbing strains, there is no question. We have overcome all objections arising from these points, but unless exceptional care is taken in the construction to protect the steel cage, particularly at its joints, from corrosion, I believe that this class of buildings will not be permanently safe. I believe it to be perfectly feasible, with great care, to protect the steel frames from corrosion, but I am convinced that many high buildings have been put up in this country where the proper care in this respect has not been taken, nor the necessary preventives against corrosion applied."

Further comment is unnecessary. I can only add that out of the whole number of these structures which are at the present time (December, 1894) in course of erection within this city (New York), which I have inspected—some twenty or more—but a small percentage of them have thus far received what may be considered an intelligent treatment for preventing the corrosion of the metal; whatever its position or location in the structure, or the nature of the metal used—cast iron, steel, or wrought iron, nearly all of the work has been painted at the workshop after machining, wholly or in part, with oxide-of-iron (Fe_2O_3) paints applied over the dirt and grease due to machining processes, and

Digitized by Google

over the mill scale as well. In the few cases where red-lead paint had been used, the condition of the work was slightly better in appearance than where the iron paints had been used, but the mill scale and machine grease were still there, and too many evidences that the red-lead paint had been too close a companion to the fish-oil barrel, and had, so to speak, "set" in the paint-pot instead of upon the work.

The expense for soda, acid, and other items, including labor, to clean from grease and mill scale the class of wrought-iron and steel work that enters into the construction of the modern office building will be about one-tenth of a cent per pound of material treated, or, by the square yard, will be a little more than the labor account of the painters for one-coat work per square yard of surface, depending in a great measure upon the weight of the beams, columns, etc., which vary in the different structures; also in various parts of the same structure.

A gallon of pure linseed oil will require not less than 16 pounds as a minimum quantity of pure red lead to 21 pounds as a maximum quantity, for a reliable non-corrosive red-lead paint which will cover from 750 to 1,200 square feet of metallic surface. These quantities of material at once remove red-lead paint from any comparison of cost with the oxide-of-iron mixed paints—principally in the form of proprietary goods, the ingredients of which are only known to the makers, and the character and performance of which will vary in quite as erratic a manner as the price paid for them—the moral turpitude of engineers, as well as the architects, permitting them to be used to the detriment of their work; the governing factor, present cost, being paramount to the safety of their structures.

Digitized by Google

DCXXVII.*

EXPERIMENTS ON A SYSTEM OF GOVERNING BY COMPRESSION.

BY JOHN H. BARR, ITHACA, N. Y.
(Member of the Society.)

THE effect of compression upon steam engine economy has been a subject of discussion for a long time. Several papers recently presented before this Society have revived the consideration of this topic, and have been followed by some experimental work; but it is probable that further investigation will be required to settle many of the points involved. The writer of the present paper became much interested in one phase of the question some time since, and was led to begin a theoretical and experimental study, which, if not the direct consequence of the earlier work on the subject, has given some results having a bearing upon previous discussions. This work is not yet as complete and exhaustive as it is hoped to make it; but the experience is related now because it is thought to offer experimental data of some possible interest.

These results are not presented as conclusive evidence, and they do not fully accord with what seems to have been a somewhat prevalent idea; or, rather, they indicate that this idea, while correct in a general way, exaggerated the effect of certain phenomena.

The combined effect of compression and inertia of the reciprocating parts upon smoothness of running at high speeds was clearly demonstrated many years ago by our honored member, Mr. Charles T. Porter. The value of compression in filling the clearance volume, in engines with large clearance, has also been recognized in a general way for a long time. One other question, the economic value of compression as an element in governing, has been the subject of occasional discussions; but experimental data on this point seem to be meagre.

---

* Presented at the New York meeting (December, 1894) of the American Society of Mechanical Engineers, and forming part of Volume XVI. of the *Transactions*.

Digitized by Google

It has been well known for a long time that a given engine with given initial pressure, etc., operates with the lowest steam consumption per horse-power per hour at a certain point of cut-off, and that a variation of the point of cut-off either side of this point is accompanied by a higher rate of steam consumption. With a given initial pressure, back pressure, speed, and point of exhaust closure, each point of cut-off corresponds to a definite mean effective pressure and horse-power.

A lighter load is usually met by an earlier point of cut-off, and a heavier load by a later cut-off. The rate of steam consumption over the best economy usually increases faster for an earlier cut-off than for a correspondingly later cut-off. The latter change results in a higher terminal pressure with greater loss through free expansion, but this is in part compensated by a reduced rate of cylinder condensation and reëvaporation.

The earlier cut-off gives, on the other hand, a greater ratio of expansion, but is accompanied by a much larger condensation rate. The effect of the earlier cut-off is to expose the internal walls of the cylinder to steam of the maximum temperature for a shorter time, and to a lower temperature for a longer time, relatively, than is the case with a later cut-off. This *tends* to reduce the mean temperature of the cylinder walls, and thus to increase the *actual* amount of steam condensed per stroke, while the indicated horse-power is less, and thus the *rate* of condensation is increased from two causes. The general effect of a high ratio of compression is the opposite of this; that is, an early exhaust closure and higher mean back pressure tends to raise the mean temperature of the walls, and hence to reduce the amount of condensation.

The mean effective pressure can be reduced to meet the requirements of a light load either by reducing the mean forward pressure or by increasing the mean back pressure. The waste per horse-power through cylinder condensation is proportional to *condensation* (*actual*) divided by the mean effective pressure. The former method reduces the denominator of this expression, but tends to increase the numerator at the same time, while the latter method reduces both numerator and denominator; hence it should be the more efficient means of securing a required reduction of mean effective pressure so far as the condensation waste controls efficiency.

In many instances, notably in electric railway plants, the en-

Digitized by Google

gines run at much less than the most economical load, a great deal of the time. This is probably often the result, in part, of a too literal adherence to the injunction, "When you are gittin', git a good deal," in buying too large an engine; but it is due more to the necessity of providing power for the occasional excessive loads to which these plants are subject. To meet the requirements of such service, an engine is needed which will run with reasonable economy at considerable less than the best load. The very heavy loads usually last for short periods only, and have correspondingly less effect upon the running expenses. From trials and observation of the performance of such plants, the writer became much impressed, something over a year ago, with the idea that a suitable system of compression governing might improve the economy of an engine under light loads. This was by no means a new idea; it has probably occurred to a great many engineers. In a paper read at the Hartford meeting of the Society, in 1881,* Dr. Thurston said:

"Since, however, the proper ratio of expansion for the engine, when once installed, is determined mainly by the steam pressure, and since any variation from this point is usually productive of reduction of efficiency, it would seem that the ratio should be fixed at the best proportion for the steam pressure adopted, and never changed. . . . It becomes at once evident that an allowable system of regulation must now affect the back pressure or cushion line. . . . It then becomes evident that the only admissible plan is the variation of the net power of the engine by an alteration of the compression line. . . . It would seem, then, that we have here an admissible method of regulation, and one which should be, on the whole, that best fitted to give high efficiency, since any excess of work of compression results simply in the transfer of heat back to the steam side."

At the New York meeting in 1883, Mr. Tabor presented a paper upon "Compression as a Method of Governing,"† in which he discussed the system of compression governing in greater detail. Many other advocates of this system could be

* Note relating to the Proper Method of Expansion of Steam and Regulation of the Engine, by R. H. Thurston, *Transactions A. S. M. E.*, Vol. II., p. 346. See also Thurston's *Manual of the Steam Engine*, Vol. I., pp. 683-697.

† *Transactions of the American Society of Mechanical Engineers*, Vol. V., p. 48.

Digitized by Google

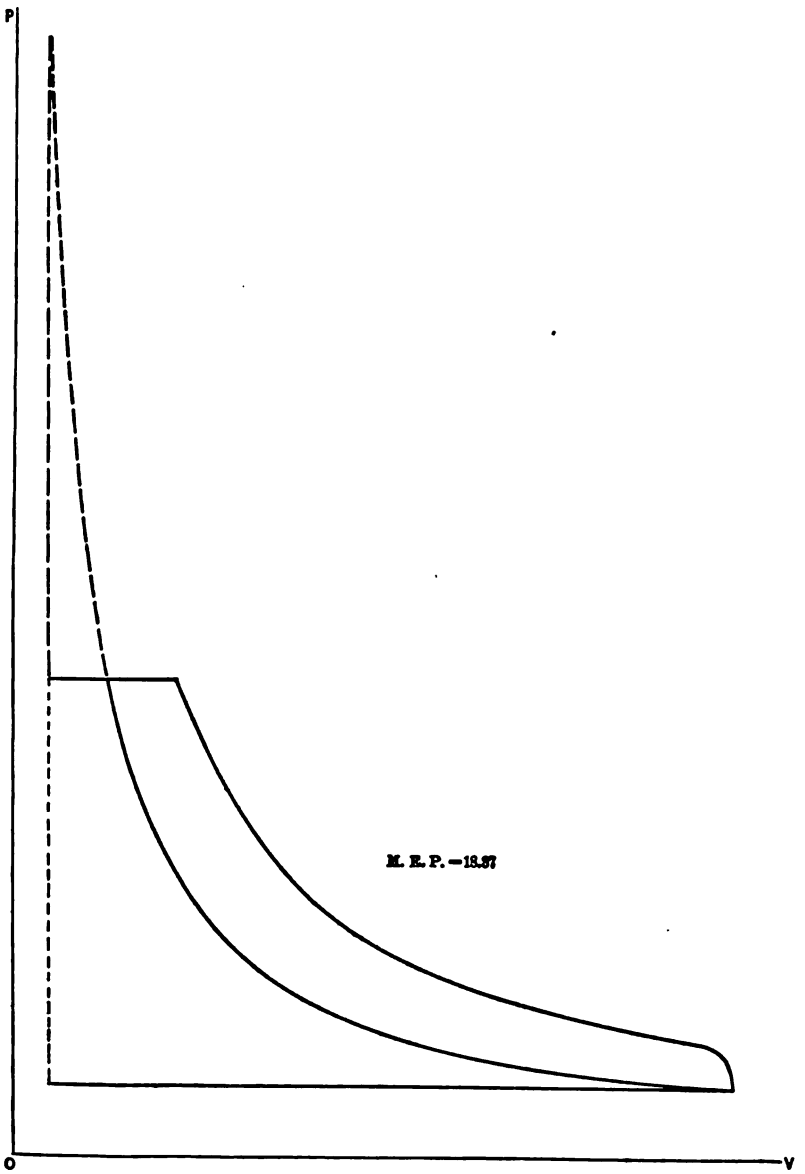

FIG. 130.

quoted, including, perhaps, to a limited extent, almost the entire fraternity of builders of single-valve automatic engines.

Fig. 130 shows an ideal diagram such as might be obtained

Digitized by Google

by this method of compression governing, while Fig. 131 shows a diagram for an equal mean effective pressure as obtained by the usual method of regulation.

The writer devised a valve mechanism which would produce such a cycle as that indicated by Fig. 130, the steam distribution being characterized by these features.

To meet a resistance greater than the most economical load, cut-off occurs later, accompanied, as in the ordinary single-valve automatic, by somewhat less compression; to meet a lighter load, the compression is increased, but the point of cut-off

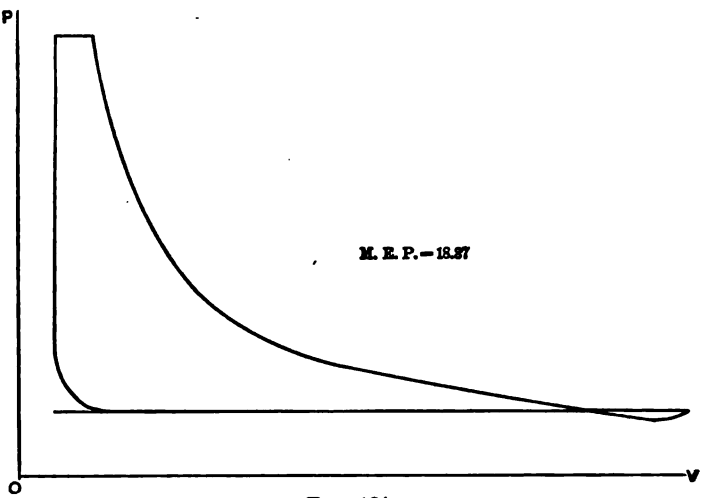

FIG. 131.

remains fixed; that is, the reduction of mean effective pressure is effected entirely by a change in the point of exhaust closure.

To avoid the excessive pressure in the cylinder at the end of compression (as indicated by the dotted line of Fig. 130), with very early exhaust closure, a relief valve was to afford communication between the cylinder and the steam chest. This was to be so arranged that it would open when the pressure in the cylinder equalled or slightly exceeded the pressure in the steam chest. This scheme had two obvious defects: first, the relief valve was bad, mechanically, especially at high speeds; second, with a very light load on the engine, the mean effective pressure might still be too great even with the earliest possible exhaust closure. Thus, with an initial pressure of 90 pounds per square inch by the gauge, minimum cut-off at $\frac{1}{4}$ stroke, clearance 5 per

Digitized by Google

cent. and 16 pounds exhaust pressure, the terminal pressure would be about 35 pounds, and the mean effective pressure would be about 18 or 19 pounds, with exhaust closure at the beginning of the return stroke. With lower exhaust pressure, higher initial pressure, or larger clearance, the mean effective pressure would be still greater.

To avoid these difficulties, another valve mechanism was devised in which the relief valve was eliminated by providing for a variable lead; and in which the minimum cut-off was early enough to reduce the terminal pressure to within a few pounds of the exhaust pressure. Mr. Tabor had intimated that this could not be done, but the writer was not familiar with his paper at the time.

This design required separate steam and exhaust valves, each operated by its own eccentric. Both of these eccentrics were to be movable, but they were controlled by the one governor, and the mechanism proposed is but little more complex than that of any two-valve engine. The valves operate in such a way that the steam-valve opening is timed to correspond to the compression. Thus, for a given initial pressure, clearance, and exhaust pressure, the compression reaches initial pressure at a quite definite position of the piston.

With the first scheme the relief valve opens at this point or a little later. It is evident that, with equal pressure in the cylinder and steam chest, it matters not whether the equilibrium of these pressures is maintained by a special relief valve or through the opening of the regular steam valve.

The valve mechanism was so designed that cut-off could vary from any assumed best point to say three-fourths stroke, accompanied by moderate reduction of compression, to meet heavy loads; while, to meet light loads, the cut-off becomes somewhat earlier, but the change in the mean effective pressure is effected mainly through earlier exhaust closure. In other words, a mean effective pressure, larger than that corresponding to the best load, was to be secured by an increase of the mean forward pressure with an incidental decrease of the mean back pressure; a smaller mean effective pressure was to be obtained by an increase of the mean back pressure and, incidentally, with a slightly lower mean forward pressure. As indicated above, the earliest point of cut-off can be made just sufficient, when acting in conjunction with the earliest exhaust closure, to pre-

Digitized by Google

vent the engine from running away under the smallest possible load.

The peculiarity of the steam-valve action is that for a change of the governor to one side of the position corresponding to the best load, the cut-off becomes later, and lead does not vary greatly; while for a change in the other direction the lead increases considerably and the point of cut-off is shifted but little. The exhaust valve permits great range for exhaust closure, while maintaining an almost constant release. Fig. 132 shows a series

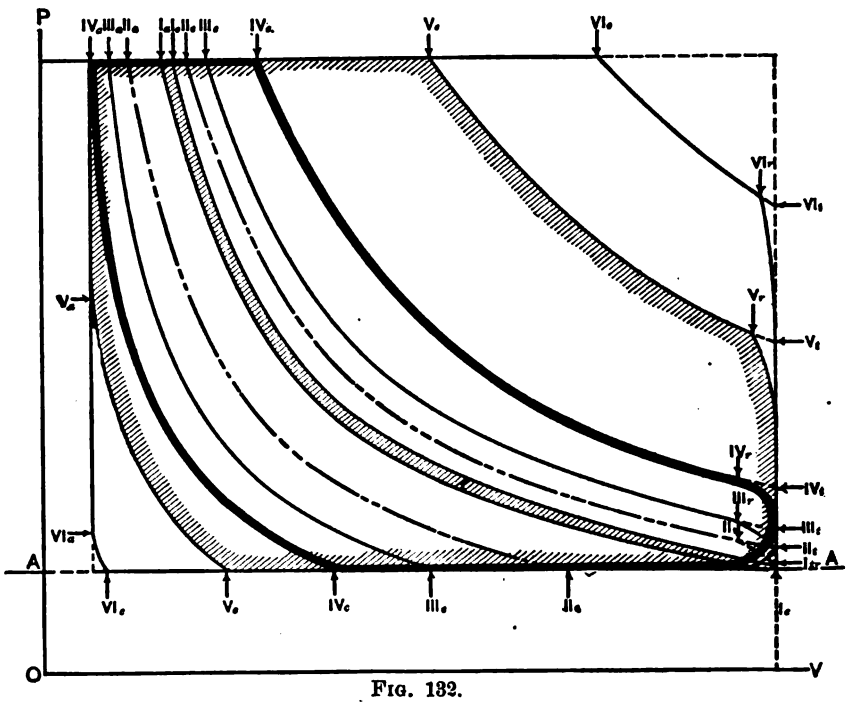

FIG. 132.

of ideal diagrams covering a wide range of load. Each diagram is designated by a number, beginning with I for the lightest mean effective pressure. Thus the outline IV*a*, IV*e*, IV*r*, IV*c* (shown by the heavy line), is the diagram corresponding to the assumed best load. The subscripts *a*, *e*, *r*, *c*, designate points of admission, expansion (cut-off), release and compression, respectively.

According to the reasoning already given, it was thought that this steam distribution would give a higher mean temperature of

Digitized by Google

cylinder walls than would result from the more usual system for any given small mean effective pressure, and hence would reduce the cylinder condensation. It was also thought that, with the short time of opening to exhaust, the exhaust loss would be comparatively low. All work done upon the confined steam after exhaust closure must evidently result in returning steam to the chest or in heating this steam. The heat thus imparted to the steam is either transmitted to the walls directly, thus raising their temperature before admission of the succeeding charge of steam; or it is retained in the clearance, or returned to the steam chest. In any event it is not rejected nor wasted.

Having reached the conclusion previously arrived at by many others, and having submitted the scheme to several prominent engineers, with the result of a general approval, it was decided to subject the theory to an experimental test.

After studying various engines with a view to finding one which could be best adjusted to the desired steam distribution, it was found that the Corliss engine, with separate eccentrics and wrist plates for the steam and exhaust valves, could be readily made to meet the requirements. The high-pressure element of the Sibley College Reynolds-Corliss experimental engine was accordingly used for this work. The trials were made with the coöperation of the college officers, and the efficient assistance of Messrs. Hall, Adams, Gerry, and Kranz, advanced students in mechanical engineering.

An ideal diagram, similar to that of Fig. 130, was laid out, and the proper adjustments of the engine were made.

By lengthening the exhaust-valve links the exhaust lap is increased, giving earlier exhaust closure and later release. By advancing the exhaust eccentric both exhaust closure and release are made to occur earlier in the stroke. By a combination of these adjustments the required exhaust closure was obtained, without change of release. The steam eccentric was advanced to give admission just as compression should reach the initial pressure, and the governor gave cut-off at the desired point when the brake load was properly adjusted. Having tested the adjustments, the trials were begun.

A series of trials were made under two different brake loads. Then the engine was restored to its normal adjustment, and a corresponding series of trials was made with the usual system of governing.

Digitized by Google

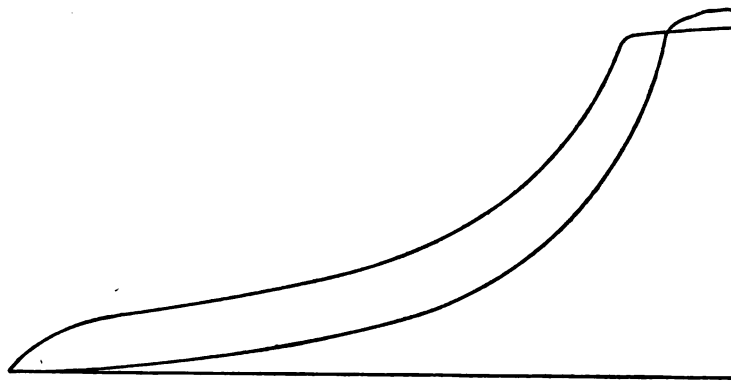

FIG. 133.

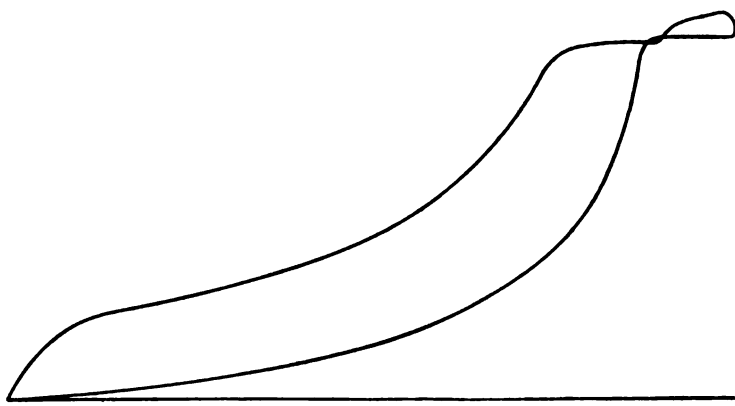

FIG. 134.

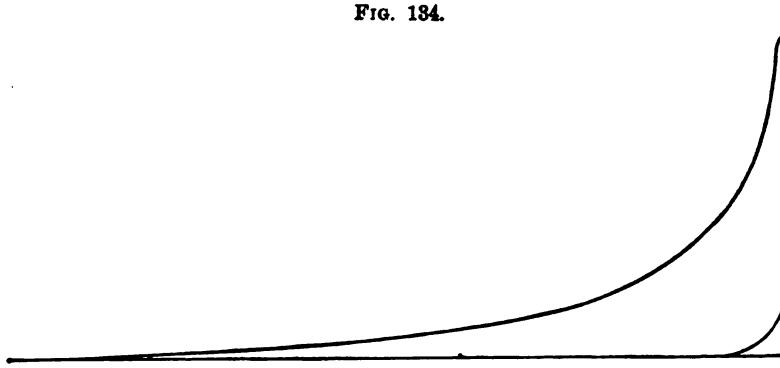

FIG. 135.

Figs. 133, 134, 135, and 136 show reproductions of typical indicator diagrams for the four different conditions.

The trials were conducted with great care, and several of them

Digitized by Google

were repeated. The exhaust steam was condensed in a surface condenser and weighed. Indicator cards, gauge readings, etc., were taken every ten minutes, and water measurements were taken at the signal for the other readings, and also when each tank was filled. The latter water readings were, of course, the

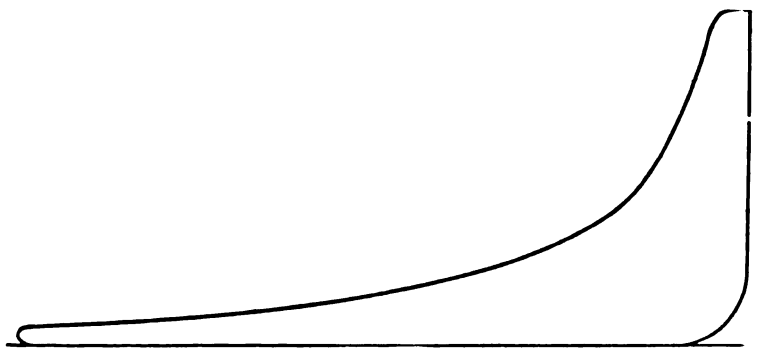

FIG. 136.

more accurate, although the partial readings checked the totals within a fraction of a pound, and the practical constancy of these partial readings showed a very regular rate throughout each trial. The brake was kept at a uniform load by a man who watched it continually.

Table I. gives the data obtained from this series of trials:

TABLE I.

	NET BRAKE LOAD, 104 POUNDS.				NET BRAKE LOAD, 216 POUNDS.	
	Compression.			Corliss.	Comp.	Corliss.
	A	B	D	E	C	F
Mean steam pressure.....	109.5	107.0	111.5	113.8	110.6	113.3
Mean rev. per minute.....	83.45	83.46	83 45	86.69	81.75	85.95
Steam per hour, pounds.....	616.0	611.6	604.0	575.7	890.3	780.8
Indicated horse-power.....	13.86	13.90	13.98	13.10	24.84	24.53
Delivered horse-power.....	10.87	10.87	10.87	11.29	23.10	23.24
Steam per I. H. P., per hour....	48.00	43.90	43.20	43.95	35.80	31.83
Mechanical efficiency, per cent..	84.53	78.20	77.8	86.2	88.98	94.74

These results show *nearly the same water rate under either system of governing*, although the small difference is in favor of the ordinary method.

Digitized by Google

The rate is high in both cases, but the light loads and the proportions of the engine would lead us to expect low economy. The engine is 9 inches in diameter by 36 inches stroke, and the clearance is large for a Corliss engine.*

Figs. 137 and 138 give a thermal comparison of diagrams from the trials under the smaller brake load with the compression system and with the usual method of regulation, respectively. This

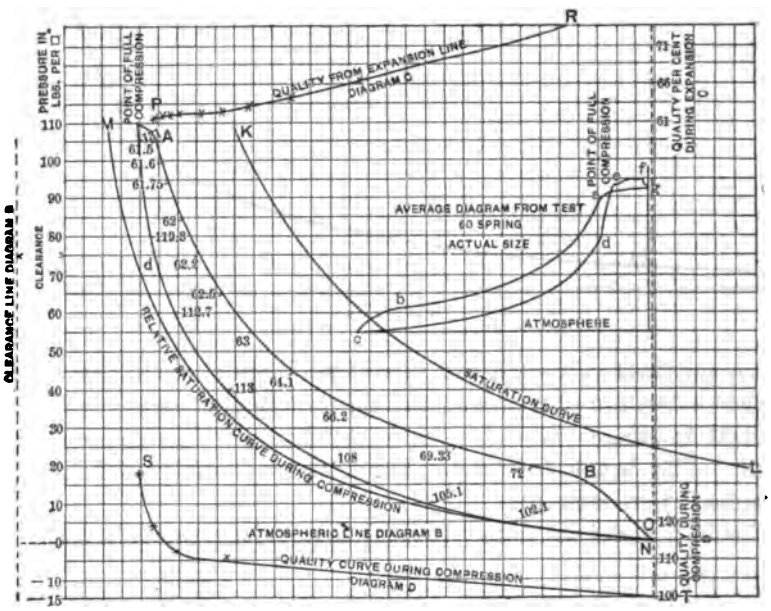

FIG. 137.

analysis was made by Mr. Thomas Hall, and a general treatment of this method was given by Professor Carpenter in a paper on "The Saturation Curve as a Reference Line."† The saturation curve as drawn in each case shows the expansion line that would have been obtained had all the steam used per stroke remained dry and saturated throughout the expansion period. The ratio of the steam accounted for by the diagram at any point to the steam shown by this curve gives the quality of the steam at that point.

* This remark as to the proportions of the engine applies only when the high-pressure element is run as a simple engine. Taken complete, as a triple-expansion engine, it has shown remarkable economy for an engine of its size.

† *Transactions of the American Society of Mechanical Engineers*, New York Meeting, 1898, Vol. XV.

Digitized by Google

This quality for the expansion period is represented graphically by the quality curve placed above each diagram. It will be seen that in the case of the compression system the quality varied from a little over 61 per cent. at or near cut-off to about 73 per cent. at release; while with the other method the corresponding range was from 40 per cent. to over 80 per cent. This indicates a very considerable smaller condensation and reëvaporation with the former method, as we had expected would be the case.

The saturation curve for the exhaust side, with its corre-

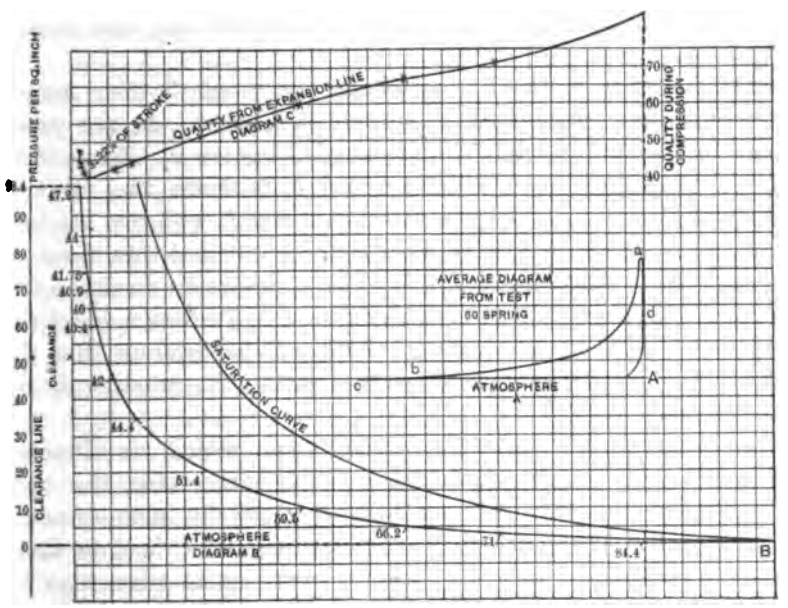

FIG. 138.

sponding quality curve, for the compression system (see Fig. 137) is only relative, for we had no means of determining the actual quality of the exhaust at any point. This line shows, however, a considerable drying of the confined steam as compression proceeds.

It will be seen from the data of Table I. that the mechanical efficiency of the engine was lower during the compression trials than in the other trials. This was anticipated, for the high compression increases the pressure on the bearings when the crank is near the dead centre positions. This is not necessarily

Digitized by Google

seriously against the system, however, for this system if employed would be used, presumably, on high-speed engines, and the weights of the reciprocating parts could be proportioned to distribute the crank-pin pressures more satisfactorily than was possible with our Corliss engine.

It appears from these limited experiments that reducing the mean effective pressure by increasing the back pressure does materially reduce cylinder condensation, as we had been led to expect; but we did not secure a net saving in steam.

We have not as yet been able to conduct further trials with a view to tracing out the compensating losses, and must resort to somewhat speculative methods to account for the results obtained.

The writer is inclined to attribute the result to two causes. One of these is mechanical, the other is thermal. In the paper read by Mr. Ball at the Engineering Congress in Chicago* he states that there is a definite relation between the ratio of expansion and the ratio of compression which will give the best economy. The writer is inclined to the belief that this theory is geometrically sound (although he once expressed a doubt on this point); but, as was stated in a discussion of Professor Jacobus's paper at the Montreal meeting,† he is of the opinion that the effect of compression on condensation within the cylinder should not be overlooked.

According to Mr. Ball's theory, the cycle which we obtained with the usual Corliss regulation is much better than the compression cycle; while our results show about the same economy in both cases. It then seems probable that there is something in the compression idea, but that we have lost its advantage by carrying the principle too far, just as we lose the gain through high ratios of expansion if carried beyond a certain limit.

The waste through free expansion with the high pressure at release in our compression trials may account for the entire loss; but an investigation made since our trials by Mr. E. T. Adams in the Sibley College laboratories leads to the suspicion that there is another factor in this loss which we had not previously rated at its full value.

---

* "Compression as a Factor in Steam-Engine Economy." By F. H. Ball. *Transactions of the American Society of Mechanical Engineers*, Vol. XIV., p. 1067.

† "Results of Experiments with a Fifty Horse-Power Single Non-condensing Ball and Wood Engine," etc. By D. S. Jacobus. *Ibid.*, Vol. XV., p. 915.

Digitized by Google

Mr. Adams conducted a series of trials upon cylinder condensation by using a thermo-pile in the cylinder head. He placed his junctions within $\frac{1}{100}$ of an inch of the internal surface of the cylinder, and by means of very careful preparations and the use of an extremely delicate galvanometer he secured a photographic diagram of the temperature changes in the cylinder wall. This work shows that the exhaust waste occurs, very largely, immediately after release by a rapid boiling away of the condensed steam, and that the loss during the later part of the exhaust stroke is comparatively small. By reference to Fig. 137 it will be seen that we had about 73 per cent. steam and 27 per cent. water in our cylinder at release, with the compression trials, and it is very probable that this water was nearly all reëvaporated during the short time that the exhaust valve was open. This would account for an exhaust loss out of all proportion to the time the exhaust valve was open.

It seems probable that the free expansion loss and this almost instantaneous exhaust loss are sufficient to account for the poor showing of these compression trials. It is hoped that a quantitative determination of the influence of each of these factors may yet be made, for they would not be without interest, even if of no direct commercial value.

While it is decidedly unsafe to draw conclusions from such limited data, these few trials indicate, as far as they go, that, whatever the possible gain from using compression as a method of governing may be, it will probably prove effective in ameliorating the wastes of the steam-engine only to a limited degree, under ordinary circumstances.

There are two conditions under which it is possible that the compression method of governing may yet prove advantageous to some extent: first, with steam pressure so low that the ordinary distribution gives a large loop at the end of expansion with light load, and, secondly, with compound engines.

It is hoped that an engine recently built at the Sibley College shops will afford means of applying the method to these cases in the near future.

DISCUSSION.

Prof. R. H. Thurston.—Professor Barr's presentation of the case, and the interesting and exact data obtained by him, constitute the first contribution, so far as I know, to this subject, apart from the speculative and introductory matter offered by

Digitized by Google

myself originally, as a merely possibly interesting suggestion, and by Mr. Tabor, later, in continuance of the discussion. It is satisfactory to find the anticipations of that original paper confirmed so precisely, while perhaps a little disappointing to find, as is undeniably the fact, that the promise of practical gain by its adoption is still so questionable. But exact knowledge is always welcome, and often finds useful application when and where least expected. It is to be hoped that Professor Barr's plan for modified compression governing may have a fair trial and under more favorable circumstances.

The complication of thermal, thermo-dynamic, dynamic, and geometric conditions which affects nearly every process in the operation of the engine, in any way related to its net final efficiency, is observed here perhaps more than in any other detail of the engine cycle; and the engineer here, as always, must finally settle upon his method of adjustment, after noting all, and his conclusion must, here, as always, be a compromise. It is interesting, in this case, to observe the illustration of this fact afforded by the compensation of all gain, by adjusting compression, by an opposite change, due to reduced mechanical efficiency.

The work of Mr. Adams, not yet published, throws some light upon the question discussed by Professor Barr, and, I am inclined to believe, is correctly interpreted by the latter. The greatest loss occurs by the sudden outrush of the stored heat of the engine-cylinder at the instant of opening of the exhaust, cooling the metal far below the mean held during the later part of the exhaust stroke; the flow of heat from the interior of the mass taking later effect, and thus leaving less opportunity than would otherwise be found for this particular method of saving. But these investigations are probably only just commenced, and we shall look to Professor Barr, Mr. Adams, and others engaged in similar researches, for further and more complete data.

The elegant method of graphical representation of the engine cycle and of determination of the variation of quality of steam and of condensation and reëvaporation, seem to me among the most striking points of this paper. The general method is that referred to by me in discussion of Mr. Ball's remarks on the occasion of the presentation of the paper on "The Milwaukee Pumping Engine," and has been elaborated in the course of Professor Carpenter's work in most interesting and useful ways;

Digitized by Google

among which ways this is perhaps not the least interesting and instructive.

Prof. D. S. Jacobus.—The results of these tests appear to indicate that governing by compression gives about the same result for indicated horse-power as if we had the Corliss cycle. But I wish to call attention to the fact that in this specific case the comparative economy per net horse-power is not the same as per indicated horse-power. When we govern by the compression we have about twice the friction, according to the figures presented, so that, if we compare the compression cycle and the Corliss cycle by net horse-power, we have about nine per cent. gain for the Corliss cycle for the lowest power given here, and about sixteen for the highest; and, of course, as the net power is what we are after, this is the true basis for comparison.

*Prof. Jno. H. Barr.**—Professor Jacobus's criticism is partially met in the body of the paper, beginning with the last paragraph on page 441. After the trials were completed, a theoretical examination of a high-speed engine was made, to see if a reasonable weight of reciprocating parts might be expected to distribute the crank-pin pressures favorably with this excessive compression, and the results seemed to indicate that about as good a distribution may be secured as is usually attained. If this is the case, there seems no good reason to think that the compression cycle necessarily involves abnormally low mechanical efficiency. For this reason it was deemed best to base the comparisons upon the indicated horse-power; but in order to present the case fairly, the brake horse-power was also reported. If the considerable increase of engine friction noted in these trials seemed to be unavoidable with the compression cycle, the handicap would be serious; for, as Professor Jacobus remarks, "net horse-power is what we are after."

Dr. Thurston also refers to the engine friction as one of the compensations; but in comparison of steam used per indicated horse-power, this cannot be so considered.

The paper was not presented to prove the advantage of the compression system, but simply to give the data of the trials, which seem to have been upon somewhat different lines from any others reported to the Society. It does, as far as it goes,

* Author's closure, under the Rules.

Digitized by Google

indicate that compression has a marked effect upon cylinder condensation; but at the same time it shows that the net gain to be anticipated from a reduction of this waste in this way is, perhaps, less than many had previously supposed; that, as stated on page 443, "it will probably prove effective in ameliorating the wastes of the steam-engine only to a limited degree, under ordinary circumstances."

The general result of Mr. Adams's investigation was given orally at the meeting, as the writer did not feel at liberty to print this matter at the time. Mr. Adams has since pub-

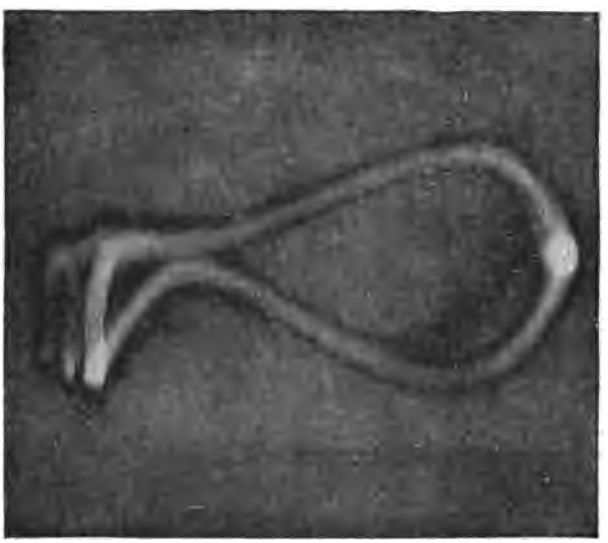

FIG. 139.

lished an account of the work in *Cassier's Magazine*, and it may be proper to give a brief statement of it here.

Fig. 139 is a reproduction of the actual diagram representing the changes in the temperature of the wall at a point in one head $\frac{1}{100}$ inch below the surface. Figs. 140 and 141 show the indicator diagrams and this metal temperature diagram respectively. It will appear from these figures that the temperature of the wall rises during admission, falls gradually during expansion, falls rapidly at release, then *rises during the first part of the exhaust stroke*, reaches a maximum, and falls again till compression begins, when a rise in temperature follows. The only feature of this which needs explanation is the reheating of the walls

Digitized by Google

during the early part of the exhaust. This is accounted for by the very rapid surface cooling at release, which lowers the temperature near the surface much below the mean temperature of the walls. After the moisture of the steam is all evaporated, the conduction of heat is from metal to dry steam; and hence the cylinder does not impart heat to the exhaust so rapidly, and the heat flowing from the mass of the walls toward the

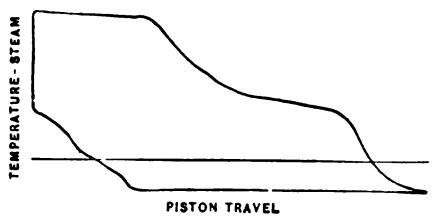

FIG. 140.

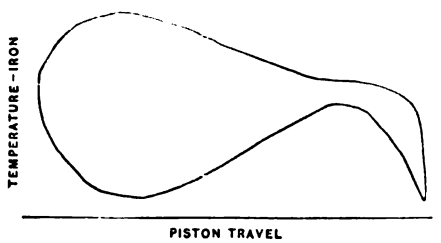

FIG. 141.

TEMPERATURE CARDS FOR STEAM AND CYLINDER WALL.

inner surface reheats the cooler portion previously reduced to the lower temperature.

This is analogous to what takes place when a piece of hot iron is suddenly plunged into water and quickly removed; the surface will be again heated upon removal from the water, but will not get quite as hot as before plunging. This investigation of Mr. Adams seems to have revealed an unsuspected event in a much-studied phenomenon; and while the results are only qualitative, it is hoped that quantitative data may yet be obtained by this method.

The work of Mr. Adams indicates that our efforts to reduce the thermal wastes of the engine must be in the way of prevention, or must be directed toward events which occur before release, or very shortly after; for the main reëvaporation loss apparently occurs very soon after this event.

Digitized by Google

DCXXVIII.*

RESULTS OF MEASUREMENTS TO TEST THE ACCURACY OF SMALL THROTTLING CALORIMETERS.

BY D. S. JACOBUS, HOBOKEN, N. J.

(Member of the Society.)

THE following data are the results of tests made as a preliminary to an investigation undertaken for the Babcock & Wilcox Co., by Professor Denton, to determine the conditions under which throttling calorimeters applied to a steam main are a reliable means of determining the average amount of moisture in the total quantity of steam flowing through it.

The results of the experiments tend to confirm the opinion that the indication of these instruments may greatly exaggerate the amount of moisture, and that the degree of inaccuracy depends upon the local conditions.

It is thought desirable, therefore, to bring the matter to the notice of the Society, and invite discussion, so that subsequent experiments may cover the conditions of any peculiar experiences of members in this line.

The tests indicate that various nozzles, such as are now used in practice, do not give an average sample of the steam which flows by them.

If a nozzle closed at the inner end, and perforated with a number of small holes in its cylindrical surface, is employed, the calorimeter will ordinarily indicate too high a percentage of moisture. For example, a calorimeter attached to a three-inch horizontal pipe by means of a horizontal nozzle of half-inch pipe, having six holes seven-thirty-seconds inch in diameter, indicated 6.3 per cent. of moisture when the actual amount was 2.3 per cent; 14.6 per cent. when the actual was 8.8 per cent.; and 17.8 per cent. when the actual was 10.1 per cent. In these

* Presented at the New York meeting (December, 1894) of the American Society of Mechanical Engineers, and forming part of Volume XVI. of the *Transactions*.

Digitized by Google

tests about 1,500 pounds of steam flowed through the pipe per hour.

A calorimeter attached to a vertical nozzle with twelve holes seven-thirty-seconds inch in diameter, placed in the same horizontal pipe, indicated 5.5 per cent. when the true amount was 2.5 per cent.; 11.1 per cent. when the true amount was 4.7 per cent.; and 20.9 per cent. when the true amount was 10.9 per cent.

A vertical nozzle, containing twelve holes one-eighth inch in diameter, also gave too high percentages of moisture. The results of the tests are given in detail in Table I.

These results show that other devices than perforated nozzles should be employed to obtain an average sample of steam, and tests are in progress to determine the efficiency of an arrangement devised by Professor Denton, which consists of a tube passing through a stuffing-box, and so arranged that it may be moved to any position across the pipe under a full head of steam. The tube has an open end, and there are no side holes. This arrangement allows determinations to be made at all depths.

Lines 15, 16, and 17 of Table I. give the results obtained with a special form of nozzle, in which a slot was cut about one-quarter inch wide and one inch long. This slot was placed so as to be at the centre of the three-inch pipe. When the slot was turned so that the current of steam struck directly against it the percentage of moisture indicated by the calorimeter was less than the true amount, and when turned so that it was away from the current the percentage of moisture was greater than the true amount. When placed at right angles to the current, an intermediate result was obtained, which was greater than the true amount of moisture. These experiments tend to show that the water which strikes a nozzle clings to it and passes around it so as to be drawn inward by the currents of steam entering the apertures.

The true percentage of moisture was determined as follows: A known weight of water at a temperature of about 65° Fahr. was injected into a three-inch pipe, and travelled along with the steam for a distance of about eight feet into a three-inch Stratton separator. After leaving the separator the steam passed through a three-inch horizontal nipple six inches long into a twelve-inch drum four feet long. A valve between the nipple and twelve-inch drum was used to throttle the steam so

Digitized by Google

as to obtain the desired rate of flow and maintain a pressure in the twelve-inch drum equal to about that of the atmosphere. The steam flowed from the twelve-inch drum through a system of piping into a surface condenser, and was finally weighed. The calorimeter nozzle was tapped into the three-inch nipple between the throttling valve and the separator at a distance of about three inches from the separator. The steam was turned at right angles in passing from the separator to the outlet pipe, so that the experiments correspond to placing calorimeters in a horizontal pipe near an elbow. The drip pipe of the separator was closed, and the water rose to such a height in the separator that it mingled with the steam passing from the same. This arrangement was adopted in order to obtain a thorough mixture of the steam and water. At first a baffle-plate device was contemplated, but on further consideration the separator was used as an equivalent. That there was a fairly uniform mixture is confirmed by the fact that the horizontal nozzle gave about the same results as a vertical nozzle.

A constant amount of moisture was maintained by taking weighings of the condensed steam and water every five minutes, and regulating the flow of water to a uniform rate. A continuous record was preserved, and only that portion where uniform conditions were maintained was employed in calculating the final results. The average length of such selected intervals was about twenty-five minutes, so that five readings of weights were used in calculating the results of each test. The readings of temperatures were made every two and one-half minutes.

The height of water in the separator was observed and found to remain at a constant figure for a given set of conditions. A few of the tests were also extended over several hours, and no practical variation was detected.

In all the tests the steam was allowed to flow through the apparatus for some time before taking the readings.

Tests Nos. 7 and 8 are exceptions to the others. In these the calorimeter was attached to the three-inch pipe leading to the separator, and within about one foot of the same. The results shown by the calorimeter in these tests are very high, 54.6 per cent. being indicated when the true amount was 21.0 per cent., and 50.8 per cent. when the true amount is 17.6 per cent. These results were probably caused by water running

Digitized by Google

along the bottom of the pipe, which splashed upward into the lower holes of the nozzle.

The nozzles were all of half-inch pipe, and were of the following forms:

Nozzle No. 1 contained twelve holes, seven-thirty-seconds of an inch in diameter, drilled along four equidistant lines parallel to the centre line of the pipe. The centres of the four holes nearest to the outlet were about three-quarters of an inch from the inner surface of the three-inch pipe when the nozzle was screwed into place. The holes drilled along each line were about three-quarters of an inch apart.

Nozzle No. 2 was of the same form as No. 1, except that the holes were one-eighth inch in diameter, and the holes nearest the outlet were within three-eighths of an inch of the inner surface of the pipe when the nozzle was screwed into position.

Nozzle No. 3 contained six holes seven-thirty-seconds of an inch in diameter, drilled along two lines parallel to the centre of the pipe and opposite each other. When in position the plane in which the holes were drilled was horizontal. The holes nearest the outlet were within three-quarters of an inch of the inner surface of the pipe. The holes were three-quarters of an inch from each other, as in nozzles Nos. 1 and 2.

Nozzle No. 4 has already been described in connection with the tests made with it.

The nozzles were made with long threads, so that all the portion projecting into the three-inch steam pipe was threaded. All were closed at their inner ends.

To measure the amount of superheat in the steam the thermometer was placed in a special form of mercury well, having a bulb at its lower extremity, and provided with a very thin neck leading from this bulb to the outside of the pipe. The large bulb, combined with the thin neck, overcomes the error introduced by conduction of the pipe to the well, which, in a well of a three-eighths-of-an-inch pipe four inches long, amounts to about four degrees Fahr. This large error occurs only in the case of superheated steam.

To obtain the value of one degree of superheat measured in this way in heating the injected water, including all radiation effects, the following method was employed: The entire amount of steam flowing through the three-inch pipe was throttled after

Digitized by Google

passing by the calorimeter nozzle, and the temperature of the steam at low pressure was measured after it entered the twelve-inch drum. The temperature of the superheated steam was measured before and after throttling, no water being injected. The temperature before throttling was measured in a six-inch drum placed just before the point where the water was injected in the regular tests, so that the entire effect of radiation was included. All portions of the apparatus were well covered with hair felt. This method of allowing for the initial superheating of the steam was checked up to the limit of moisture that could be indicated by superheating in the twelve-inch drum, and was found to agree within one-fifth of one per cent.

Whenever the amount of moisture was low enough to cause the steam in the twelve-inch drum to be superheated, the percentages obtained by weighing, given in Table I., were checked by the percentages obtained by calculation from the superheat.

The basis of pressure was a plug device, which was loaded with weights so as to correspond to the required pressures. The plug was one-half inch in diameter, and the hole in the bushing into which it fitted was 0.5005 inch. Both the plug and the bushing were ground true, and were the work of the Pratt & Whitney Company. The readings obtained with this plug were checked by the square-inch knife-edge piece device of the Ashcroft Company, and by a mercury column.

To standardize the thermometers, they were placed in the mercury wells in which they were used, or in similar ones, and subjected to a known pressure of saturated steam. The corrections were made by employing Regnault's values for the temperature of saturated steam, so that the final readings correspond to the temperatures by an air thermometer. In general, if the entire column of mercury in the thermometer is heated, the reading indicated by the same will be too high; whereas, if a large portion of the column of mercury contained in the stem is not heated, the reading will be too low.

The radiation of the Barrus calorimeter was determined by passing superheated steam through it. The separator portion was filled with water to a given height in the glass, and the temperature of the superheated steam was adjusted so that the water level remained constant in the glass. If the water increased in height, the temperature of the entering steam was increased so as to reëvaporate some of the water; and if it fell too low, the tem-

Digitized by Google

perature of the steam was decreased. The tests were extended over several hours. An average of the loss of superheat represents the losses by radiation. To determine the radiation of the heat gauge portion, the orifice was removed, and superheated steam was passed through the apparatus at the same rate as if the orifice had been present. In this case the loss of superheat also represents the loss by radiation.

TABLE I.

COMPARISON OF ACTUAL PERCENTAGES OF MOISTURE WITH AMOUNTS INDICATED BY A THROTTLING CALORIMETER; STEAM PASSING THROUGH A THREE-INCH HORIZONTAL PIPE WITH A VELOCITY OF ABOUT FORTY-FIVE FEET PER SECOND.

No. of Test.	Character of Nozzle.	Steam passing through 3-in. pipe in lbs. per hour, including moisture shown in Col. 6.	Pressure of steam in lbs. per square inch above atmosphere.	Percentage of moisture by Barrus calorimeter.	Correct percentage of moisture determined by weighing water injected into steam pipe.	Remarks.
1	2	3	4	5	6	7
1	Vertical nozzle No. 1 with 12 holes $\frac{7}{32}$ in. diameter...	1698	80	5.5	2.5	
2		1877	80	9.3	3.3	
3		1768	80	11.1	4.7	
4		1788	80	20.9	10.9	
5		2003	80	31.8	19.1	
6		2381	80	47.9	36.5	
7	Vertical nozzle No. 2 with 12 holes $\frac{1}{4}$ in. diameter.....	1916	78.5	54.6*	21.0	
8		2044	78.9	50.8*	17.6	Separator of calorimeter and heat gauge both in use.
9	Horizontal nozzle No. 3 with 6 holes $\frac{7}{32}$ in. diameter.....	1538	80	6.3	2.3	
10		1586	80	8.4	3.2	
11		1525	80	14.6	8.8	
12		1637	80	17.8	10.1	
13		1745	80	37.4	23.0	
14		2187	80	46.9	37.2	
15	Nozzle No. 4. Slot away from current.....	1577	80	5.6	1.0	
16	" " " toward "	1576	80	0.1	1.4	
17	" " " at right angles to current.	1578	80	2.5	1.2	
18	Horizontal nozzle No. 3, with 6 holes $\frac{7}{32}$ in. diameter.†	1810	80	1.0	.5	
19		1815	80	1.5	.8	Only heat gauge of calorimeter in use.
20		1818	80	2.3	1.0	
21		1830	80	3.6	1.6	

* In these tests the calorimeter was attached to the horizontal pipe entering the separator, and the conditions were such that it is probable that moisture ran along the bottom of the pipe and entered the lower holes of the nozzle.

† The results of these tests were added to the paper and presented at the time of the meeting. In these tests the true percentages of moisture given in Column 6 were calculated from the superheating of the steam in the 12-inch drum, which was shown to give the same results as those obtained by weighing the water injected.

Digitized by Google

APPENDIX.

It was difficult to ascertain the average temperature of the superheated steam entering the apparatus, as has been previously explained, and this, together with the fact that the effect of radiation should be considered, led to experiments to determine the total heat of the superheated steam at the initial pressure for various readings of the thermometers which registered the superheating in the six-inch drum marked *B* in Fig. 143. The total heat of the superheated steam at entrance was taken as the total heat of saturated steam at the observed pressure, plus some factor corresponding to the specific heat of steam, multiplied by the degrees of superheating registered by the thermometers, and this factor was deduced from the experiments.

Let p_1 and p_2 be the pressure in the six-inch drum marked *B* in Fig. 143, and in the twelve-inch drum marked *N*, into which the steam passed after being throttled by the valve *M*; t_1 and t_2, the temperatures of saturated steam at the above pressures; S_1 and S_2, the temperature of the superheated steam; H_1 and H_2, the total heats of saturated steam; R, the heat lost by radiation of each pound of steam in passing through the apparatus; and X, the heat factor, as above explained. We then have,

$$H_2 + 0.48\,(S_2 - t_2) + R = H_1 + X\,(S_1 - t_1) \quad . \quad . \quad . \quad . \quad . \quad . \quad (1)$$

$$X = \frac{H_2 + 0.48\,(S_2 - t_2) - H_1 + R}{S_1 - t}.$$

If the heat lost by radiation is deducted from the total heat of the steam passing the six-inch drum, we may then obtain a factor X^1, which, on being used in the right-hand member of equation (1), will give the total heat in one pound of the steam when it leaves the separator, provided that no water is injected into the pipe. This factor is, therefore,

$$X^1 = \frac{H_2 + 0.48\,(S_2 - t_2) - H_1}{S_1 - t_1}.$$

The data and calculated values of X^1 are given in Table I. In each test uniform conditions were maintained, and a continuous record was taken for from two to three hours. Only the last portion of the records was used in obtaining the average data given in the tables, as it was found that considerable time elapsed before the effect of radiation and conduction became constant.

Digitized by Google

TABLE I.

Determination of heat factor X^1, by which the degrees of superheating, as registered by thermometers placed in the steam entering the apparatus, must be multiplied in order to obtain a quantity which, if added to the total heat of saturated steam, will give the total heat of the superheated steam on leaving the separator, marked K in Fig. 143. This factor includes the effect of radiation, so that it varies with the amount of steam flowing through the apparatus. The readings of the thermometers are all corrected so as to correspond to temperatures registered by an air thermometer.

Number of test.	Weight of steam in lbs. per hour.	Pressure in lbs. per square inch above atmosphere.		Temperature corresponding to pressure, in degrees Fahr.		Temperature of superheated steam as registered by thermometers. Degrees Fahr.		Total heat of saturated steam above zero. Degrees Fahr. in B. T. U.		Heat factor, X^1, corresponding to readings of thermometers in 6-inch drum, and including radiation.
		Initial.	Final.							
		p_1	p_2	t_1	t_2	S_1	S_2	H_1	H_2	$\frac{H_2 + 0.48\,(S_2 - t_2) - H_1}{S_1 - t_1}$
1	600	80	0.2	323.7	212.7	360.9	314.7	1212.6	1178.8	0.409
2	680	80	0.2	323.7	212.7	356.0	313.6	1212.6	1178.8	0.452
3	700	80	0.2	323.7	212.7	370.7	326.7	1212.6	1178.8	0.445
4	1400	80	0.8	323.7	214.7	356.8	316.1	1212.6	1179.4	0.468
5	1425	80	0.8	323.7	214.7	350.0	308.9	1212.6	1179.4	0.457
6	1560	80	1.0	323.7	215.3	373.9	332.5	1212.6	1179.6	0.464

The universally accepted figure for the specific heat of steam is 0.48, which is derived from Regnault's experiments. In these experiments the range of temperature was from about 260 degrees Fahr. to 430 degrees Fahr. In tests with throttling calorimeters it is necessary to know the total heat of superheated steam at atmospheric pressure. This is usually taken as the total heat of saturated steam at atmospheric pressure, plus the degrees of superheating, times 0.48. This may not be precisely so, as it has not been shown that the factor of 0.48 applies over the range from the temperature of saturation, or 212 degrees Fahr., to the lowest temperature of Regnault's experiments, or 260 degrees Fahr.

In Regnault's experiments on the specific heat of steam he determined the total heats of superheated steam at two different temperatures, and divided the difference of the total heats by the difference of temperature in order to obtain the specific heat.

The average results of the experiments are given in Table II. Table III. contains a comparison of the total heats of superheated

Digitized by Google

steam at atmospheric pressure, as indicated by the experiments, with the total heat calculated by employing the factor of 0.48.

TABLE II.

REGNAULT'S EXPERIMENTS TO DETERMINE THE SPECIFIC HEAT OF STEAM.

Number of series.	Tests with Lowest Amounts of Superheating.			Tests with Greatest Amounts of Superheating.			Difference of temperature, in degrees Fahr. Col. 6 − Col. 3.	Difference of total heats per lb. in B. T. U. Col. 7 − Col. 4.	Specific heat of steam. Col. 9 ÷ Col. 8.
	Number of tests in series.	Temperature of superheated steam, in degrees Fahr.	Total heat in B. T. U. per lb., above 32 degrees Fahr.	Number of tests in series.	Temperature of superheated steam, in degrees Fahr.	Total heat in B. T. U. per lb., above 32 degrees Fahr.			
1	2	3	4	5	6	7	8	9	10
1	5	261.86	1166.27	3	448.00	1253.54	186.14	87.27	0.4688
2	3	279.91	1184.45	3	438.55	1260.77	158.64	76.32	0.4811
3	10	255.76	1162.39	4	410.79	1236.92	155.03	74.54	0.4808
4	6	252.95	1161.79	7	420.85	1242.32	167.90	80.53	0 4796
								Average	0.4776

NOTE.—Regnault remarks that if we neglect the first series, which is not as reliable as the others, the average is 0.4805.

TABLE III.

COMPARISON OF THE TOTAL HEATS OF SUPERHEATED STEAM AS DETERMINED BY REGNAULT'S EXPERIMENTS WITH VALUES OBTAINED BY EMPLOYING THE EQUATION:

$$\left.\begin{array}{l}\text{Total heat in B. T. U., above}\\ \text{32 degrees Fahr.}\end{array}\right\} = 1146.6 + 0.48 \times \text{degrees of superheating.}$$

Number of series.	Tests with Lowest Amounts of Superheating.				Tests with Greatest Amounts of Superheating.			
	Temperature in degrees Fahr.	Total heat in B. T. U., above 32 degrees Fahr.			Temperature in degrees Fahr.	Total heat in B. T. U., above 32 degrees Fahr.		
		By experiment.	Calculated.	Difference.		By experiment.	Calculated.	Difference.
1	2	3	4	5	6	7	8	9
1	261.86	1166.3	1170 5	+ 4.2	448.00	1253.5	1259.9	+ 6.4
2	279.91	1184.4	1179.2	− 5.2	438.55	1260.8	1255.3	− 5.5
3	255.76	1162.4	1167.6	+ 5.2	410.79	1236.9	1242.0	+ 5.1
4	252.95	1161.8	1166.3	+ 4.5	420.85	1242.3	1246.8	+ 4.5

Digitized by Google

A graphical representation of the results of Regnault's experiments is shown in Fig. 166. The average results of each series of tests are indicated by dots enclosed in circles. The crosses represent the six tests which form the second series. An examination of Fig. 166, together with the figures given in Table III., shows that the results for the total heats vary among themselves, the results for the second series of tests being above the theoretical value in which the specific heat is taken as 0.48, and the remainder below this value.

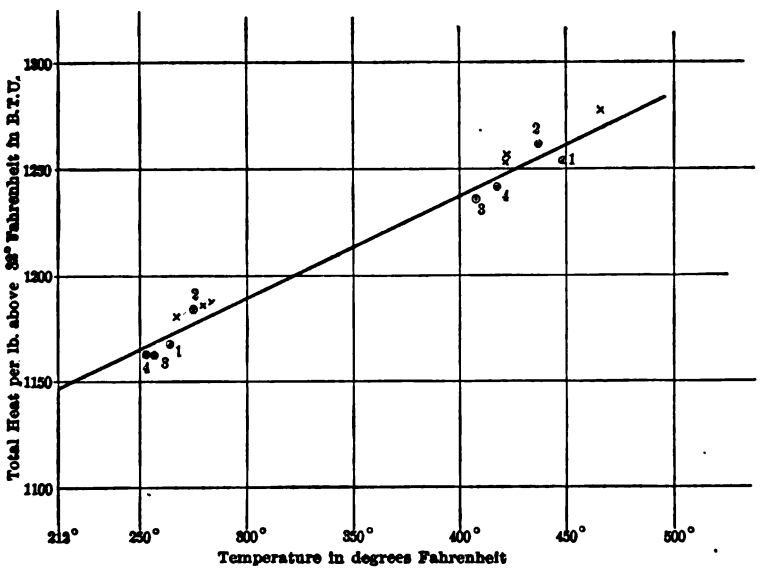

FIG. 166.

As Regnault remarks that the first series of tests are not as reliable as the others, we will consider only the data furnished by the remaining series.

In Fig. 166 it may be observed that the six separate experiments of the second series, which are indicated by the crosses, are all about the same distance above the line found by employing the factor of 0.48, thus showing that the experiments agree well among themselves, and that the difference between this series and the third and fourth is not due to an accidental variation. The third and fourth series of tests were made with a larger calorimeter than was used in the second series, and it may be that the discrepancies in the total heats arise from some slight error in

Digitized by Google

estimating the constants for the apparatus. Should there be such an error, it would affect the value determined for the specific heat but little, if at all, for the specific heat is calculated by taking the difference of the total heats, and a constant error in the total amounts would not affect the result. As the average of the two results, one for the calorimeter used in the second series of tests, and the other for the larger calorimeter used in the third and fourth series of tests, nearly agree with the total heat calculated by employing the factor of 0.48, we have adopted this factor in our work.

We have made a number of experiments to show how nearly the above factor is correct as applied to calorimeters of the throttling principle, by starting with steam in a state of rest, or with moving steam just at the point of superheating, and passing it through a Barrus calorimeter. If the initial state of the steam is the same as the saturated steam of Regnault's experiments, and the factor of 0.48 is correct, then the temperature of the steam after throttling, or the normal reading, should be that obtained by the equation,

$$\text{Normal reading} = \frac{H_1 - H_2}{0.48} + t_2.$$

In the first series of experiments, the calorimeter was attached to a vertical nozzle, with no side holes, in the same position in which it is shown in Fig. 143. This vertical nozzle drew the steam from the centre of the three-inch pipe. It was found that, with no other steam flowing through the pipe than that which passed into the calorimeter, the temperature of the steam leaving the calorimeter, corrected for radiation, with an initial steam pressure of 80 pounds, was 283 degrees Fahr. When the valve M was opened so as to allow the steam to pass the calorimeter nozzle at a considerable velocity, higher normal readings were obtained than for steam in a state of rest, provided the steam was initially superheated, and was brought down to a state of saturation by injecting water into it. In such tests the excess of water was drawn out by the separator K, and the steam which passed into the calorimeter was drawn from the steam after this excess of moisture was removed. In these tests the temperature of the steam in the three-inch pipe was measured near the calorimeter nozzle by means of a thermometer, the bare bulb of which came in direct contact with the steam, and by means of a ther-

Digitized by Google

mometer placed in a mercury well having a thin neck, as described in the paper.

With the above arrangement it was impossible, however, to bring the steam in the three-inch pipe just up to the point of superheating, and hold it at this point long enough to obtain reliable readings. The apparatus shown in Fig. 167 was therefore constructed.

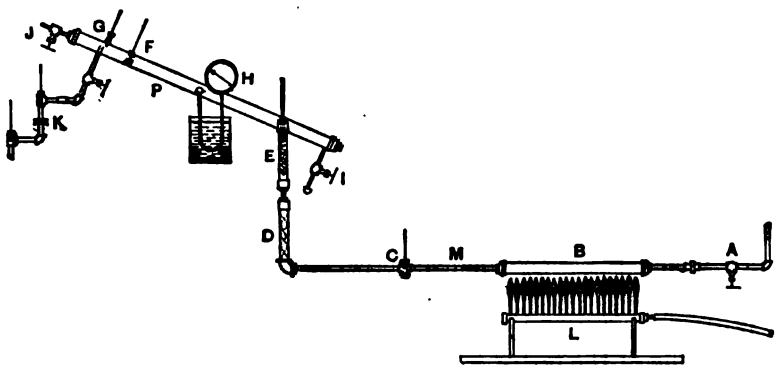

FIG. 167.

In this apparatus the steam was admitted at *A*, and flowed into the horizontal pipe, *B*, where it was superheated by means of the gas burners, *L*. The temperature of the superheated steam was measured at *C*. A small stream of water was allowed to flow over the pipe *M* in some of the tests, so as to produce any desired degree of wetness in the steam. The wet steam was passed upward through the vertical pipe, *D*, which contained an auger-shaped piece which tended to thoroughly mix the water with the steam. The steam leaving *D* was passed through a smaller pipe into the lower part of the vertical pipe, *E*, which contained a long mercury well for measuring the temperature. The steam then passed into the side of the three-inch pipe, *P*, which was placed at an angle of about 30 degrees, so that any moisture deposited in the pipe ran downward and was drawn out at the drip, *I*. The pressure was measured by means of the gauge, *H*. The thermometer at *F* was placed in a mercury well having a thin neck, and that at *G* passed through a stuffing-box so that its bulb came in direct contact with the steam. The calorimeter nozzle had no side holes, and projected upward into the three-inch pipe so as to draw steam from the centre of the same. *J* is a valve that was opened in some experiments where the steam was made to flow past the calorimeter nozzle.

Digitized by Google

All parts of the apparatus, except the horizontal pipe, *M*, and the superheating pipe, *B*, were thoroughly covered with felting to diminish the radiation. With this apparatus the steam could be brought just to the point of superheating, and could be maintained in this condition for a considerable period of time; and it was found that the normal reading of the calorimeter for steam in this condition was 286 degrees Fahr. The minimum normal reading was 283 degrees Fahr., which agreed with the experiments already described, where the calorimeter was attached to a horizontal three-inch pipe. The theoretical normal reading for an exit pressure corresponding to a temperature of 213 degrees Fahr., which was the temperature indicated by the Barrus calorimeter with saturated steam at exit, was 283.5 degrees Fahr.; so that, starting with steam in a state of rest, the normal reading for steam which is slowly condensing is the same as the theoretical normal reading employing the factor of 0.48.

With steam initially just at the point of superheating, a slightly lower value of the factor for the specific heat should be employed, to make the theoretical normal reading conform with that obtained by experiment. We cannot, however, say which of the above states of steam, or if either of the above states, are the same as in the steam used in Regnault's experiments.

The method adopted by Mr. Barrus to determine the normal reading is to obtain the indications of the calorimeter when supplied with steam from the pipe to which it is connected, when the latter is open to the boilers, and there is no flow of steam through it, so that the pipe contains what Mr. Barrus calls "dead steam." * Our tests at 80 pounds pressure show, as we have already stated, that results obtained in this way agree with the theoretical normal readings, provided the sample is taken from a horizontal pipe by means of a vertical nozzle with no side holes. In the case of a nozzle with side holes, placed in a vertical pipe, however, we have not been able to obtain correct normal readings, apparently because of water which trickled down the side of the pipe and entered the nozzle.

METHOD OF COMPUTING THE TRUE PERCENTAGE OF MOISTURE IN THE STEAM FLOWING THROUGH THE THREE-INCH HORIZONTAL PIPE.

The method which has already been described consisted in determining the percentage of moisture in the mixture of steam and

* *Boiler Tests*, by Geo. H. Barrus, p. 259.

Digitized by Google

the known weight of injected water. The data and calculations in detail for test No. 9 of Table I. are as follows:

1. Duration of selected interval for which the average data is obtained, in minutes	30
2. Steam condensed in the condenser R, in pounds per hour	1476
3. Steam passing through orifice of Barrus calorimeter L, in pounds per hour	58
4. Water drawn from separator of Barrus calorimeter, in pounds per hour	4.10
5. Total steam and entrained water leaving the separator K, in pounds per hour = line 2 + line 3 + line 4 = W	1538
6. Water injected at P, in pounds per hour = w	45.6
7. Temperature of water injected at F, in degrees Fahr. = t'	72.6
8. Pressure of steam at J, in pounds per square inch above atmosphere.	80.0
9. Sensible heat of steam corresponding to pressure at J, in B.T. U. = h	326.9
10. Temperature of steam corresponding to pressure at J, in degrees Fahr. = t''	323.7
11. Latent heat of steam corresponding to pressure at J, in degrees Fahr. = L	885.7
12. Temperature of superheated steam before injecting water, as registered by the thermometer D, in degrees Fahr. = t'''	353.4
13. Weight of the injected water w that was evaporated into steam on mingling with the superheated steam, in pounds,* $= \frac{0.47(t''' - t'')(W - w) - w(h - t')}{L}$	9.6
14. Total weight of water in the mixture of steam and water = line 6 — line 13	36.0
15. True percentage of moisture in steam on reaching the Barrus calorimeter at L = line 14 × 100 ÷ line 5	2.3
16. Water entering the twelve-inch drum N, in pounds = line 14 — line 4	31.9
17. True percentage of moisture in steam in twelve-inch drum = line 16 × 100 ÷ line 2	2.2

CALCULATION OF PERCENTAGE OF MOISTURE INDICATED BY THE BARRUS CALORIMETER.

1. Weight of water drawn from separator per hour, in pounds	4.10
2. Weight of steam flowing through orifice, in pounds per hour	58
3. Temperature after throttling, in degrees Fahr.	281
4. Correction for radiation of heat gauge, in degrees Fahr.	2.0
5. Correction for radiation of separator, in degrees Fahr.	3.9
6. Correction for radiation of horizontal half-inch pipe leading from nipple to separator, in degrees Fahr.	1.1
7. Temperature of steam after throttling, corrected for radiation of heat gauge, in degrees Fahr.	288
8. Percentage of moisture in steam leaving separator	0

* In the tests in which there was a high percentage of moisture the injected water condensed a portion of the steam instead of being partly evaporated. The factor of 0.47 is obtained from the experiments given in Table I.

Digitized by Google

9. Percentage of moisture removed by the separator of the Barrus calorimeter = line 1 × 100 ÷ (line 1 + line 2)..... 6.6
10. Correction for radiation of separator and half-inch pipe in per cent. $= \frac{5.0 \times 0.48 \times 100}{885.7}$..... 0.8
11. Percentage of moisture indicated by Barrus calorimeter = line 9 − line 10..... 6.8

DETERMINATION OF THE PERCENTAGE OF MOISTURE INDICATED BY THE SUPERHEATING OBSERVED IN THE TWELVE-INCH DRUM MARKED *N* IN FIG. 143.

1. Pressure of steam before throttling, in pounds per square inch above atmosphere = p_1..... 80
2. Pressure of steam after throttling, in pounds per square inch above atmosphere = p_2..... 0.9
3. Sensible heat corresponding to pressure $p_1 = h_1$..... 326.9
4. Latent heat corresponding to pressure $p_1 = L_1$..... 885.7
5. Total heat corresponding to pressure $p_2 = H_2$..... 1179.5
6. Temperature corresponding to pressure $p_2 = t_2$..... 215.0
7. Temperature of superheated steam after throttling = S_2..... 240.2
8. Quality of steam $= \frac{H_2 + 0.48\,(S_2 - t_2) - h_1}{L_1}$..... 0.976
9. Percentage of priming = 100 (1 − line 8)..... 2.4

SUMMATION FOR THE SINGLE TEST COMPUTED ABOVE.

1. The steam passing into the Barrus calorimeter contained 6.3 per cent. of moisture, whereas the average percentage contained in the steam flowing through the three-inch pipe to which the calorimeter was attached was 2.3 per cent.

2. The percentage of moisture in the steam entering the twelve-inch drum was 2.2, whereas the percentage calculated from the amount of superheating was 2.4 per cent. A number of comparisons of this kind were made, to check the moisture indicated by the superheating in the twelve-inch drum, and in each case the results agreed with each other within an average figure of ¼ of 1 per cent., the difference being sometimes in one direction and sometimes in the other.

DISCUSSION.

Mr. William Kent.—I would like to ask Professor Jacobus, first, whether the differences are due to any action of the nozzle inserted into the steam-pipe, or whether they are due to the calorimeter itself, and if the latter, what is the cause of the error of the calorimeter? Is it due to imperfect knowledge of the specific heat of superheated

Digitized by Google

steam, or is it due to some action of the calorimeter itself? We have always supposed that this form of calorimeter was perfect, provided we knew the specific heat of superheated steam. We have long had the impression, however, that we were entirely uncertain as to whether or not we had an average sample of steam in the nozzle that took it out of the steam-pipe.

Professor Jacobus.—The error is due to the action of the nozzle, which does not supply the calorimeter with an average sample of steam. We have checked the throttling principle in the way indicated in the paper, which can be explained more readily by means of the sketch shown in Fig. 143. Steam entered through the 3-inch pipe at *A*, and passed into the 6-inch drum *B*, where the superheat was measured by means of the thermometers *C* and *D*. The thermometer *C* was placed in an ordinary mercury well, and the thermometer *D* in a mercury well having a thin neck and a bulb of metal at its lower end, as explained in the paper. The thermometer placed in the well having the bulb at the lowest end was found to give a higher reading than one placed in the ordinary form of well. From the 6-inch drum *B* the steam passed into the horizontal 3-inch pipe *E*. Water was injected through the nozzle *F*, in which two jets were made to impinge on each other and thus produce a fine spray, or through a plate at *G* perforated with holes one-eighth of an inch in diameter. The temperature of this water was measured at *W*. The temperature of the mixture of steam and water was measured at *H*, the reading in all cases being that corresponding to saturated steam at the pressure existing in the pipe *E*. The pressure was measured by means of the two gauges *I* and *J*. The siphon connecting the gauge *J* with the pipe *E* was surrounded with water so as to prevent overheating. The steam and water passed into the separator *K*, the drip of which was closed so that all the moisture in the steam passed through the separator. The Barrus calorimeter *L* was placed in the 3-inch nipple which formed the outflow of the separator. *M* is a valve which was employed to regulate the rate of flow, and to throttle the steam so that it was very nearly at atmospheric pressure in the 12-inch drum *N*. The temperature of the steam in the 12-inch drum was measured by means of the thermometers *O* and *P*, the thermometer *O* being placed in a mercury well, and the thermometer *P* coming directly in contact with the steam. The thermometer *Q* measured the temperature of the steam

Digitized by Google

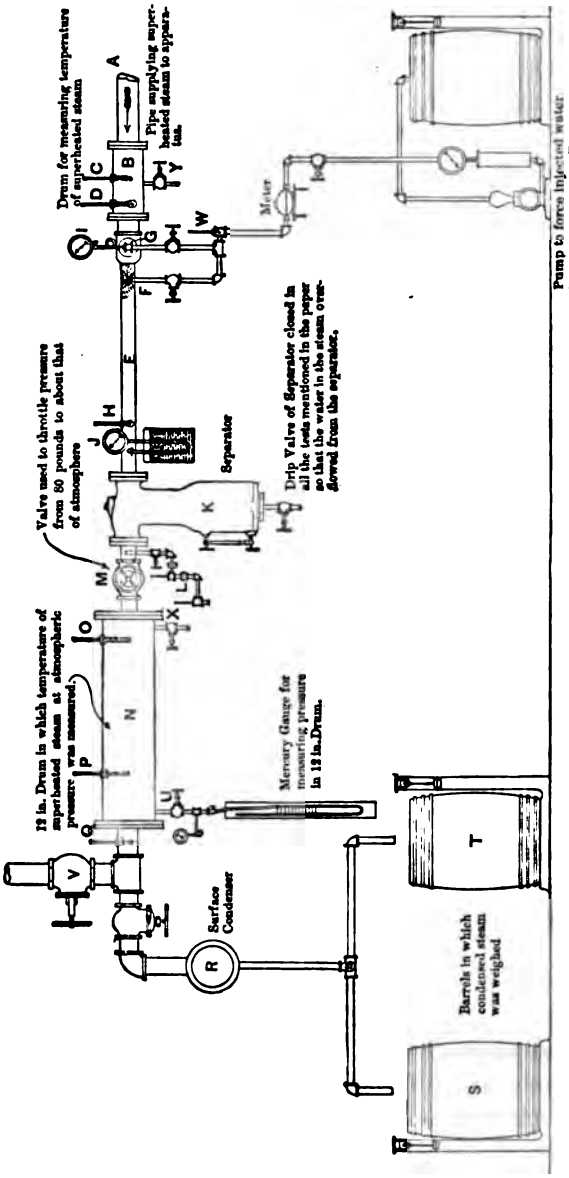

FIG. 143.

on leaving the 12-inch drum. From the 12-inch drum the steam entered the condenser *R*, and the condensed steam was finally weighed in the barrels *S* and *T*. The pressure in the 12-inch drum was measured by means of a gauge and a mercury manome-

Digitized by Google

ter attached to the pipe *U*. *V* is a valve through which the steam could be allowed to escape into the atmosphere.

The valve *M* and the drum *N* constitute a large throttling calorimeter, so that if we know the percentage of moisture in the steam before passing through the valve *M* we can compare it with the value obtained by calculation from the superheating observed in the drum *N*. The true percentage of moisture was calculated from the weight and temperature of the water injected at *F* or *G*, together with the superheating of the steam in the drum *B*, and the results by the two methods were found to agree within one-fifth of one per cent., as stated in the paper, up to a range nearly equal to the maximum capacity of a throttling calorimeter at the existing pressures. When the thermometers in the drum *N* registered about 220 degrees a slight drip of water would appear at the valve *X*, thus showing that all the moisture had not been evaporated, but up to this limit the percentage of moisture calculated from the superheating agreed with that obtained by weighing the amount of water injected.

Mr. Kent.—You used the coefficient of 0.48 for superheat?

Professor Jacobus.—Yes; the coefficient of 0.48 was used for the specific heat of steam. By the way, this is another point I have worked on. We have to obtain the "normal" reading of the calorimeter, or that corresponding to saturated steam, by experiment, or use the coefficient of 0.48 for the specific heat of steam. The experiments show that, starting with 80 pounds, various normal readings can be obtained, depending on the initial condition of the steam. If we start with superheated steam at 80 pounds and inject enough moisture to condense a portion of it, and make certain that there is no superheat left in it, then the normal reading of the calorimeter at *L*, and the normal reading of the drum *M*, may be as high as 290 degrees Fahr. if the steam is moving through the pipe *E* with a considerable velocity. With steam in a state of rest in the pipe, with the exception of the small amount drawn off by the calorimeter, the minimum normal reading, corrected for radiation, was 283. The normal reading with the steam as dry as possible without superheating was 286 degrees Fahr. The reading of the lower thermometer of the Barrus calorimeter for saturated steam was 213 degrees Fahr.; so that the theoretical reading was 283½ degrees Fahr., which about agrees with the lowest reading determined by experiment.

We have used the theoretical normal reading although the tests

Digitized by Google

seem to indicate that dry steam will give a slightly higher figure. In the present comparison it makes no practical difference which one of the above normal readings is used, because the tests were so conducted that a change in the normal reading will alter the percentages of priming determined by weighing and that obtained by the Barrus calorimeter in about the same ratio.

Mr. Kent.—How do you explain that more water got into the calorimeter than was contained in the average steam?

Professor Jacobus.—I will explain that after saying more in regard to the normal reading. It is probable that the variation of the normal readings with quiescent steam is due to the presence of mist in the steam. As the steam becomes dryer this mist is evaporated so that when the steam is just at the point of superheating the normal reading is higher than it is for steam which contains mist. With steam in a quiescent state in a pipe, and which is undergoing condensation on account of the radiation of the pipe the normal reading corresponds to that of steam containing the maximum amount of mist. The entire variation in the normal reading for quiescent steam, for the pressure at which our experiments were made, was three degrees Fahrenheit. Experiments are still needed to show how nearly quiescent steam corresponds to the steam of Regnault's experiments.

That there may be a difference in the condition of steam at a given temperature and pressure, was appreciated by Professor Rankine, who makes the statement that a vapor near the point of liquefaction has the power of retaining suspended in it a portion of its liquid in a state of cloud or mist.

Now, with regard to the action which occurs at the nozzle: To gain knowledge on this point a nozzle was used which had a slot in one side about one-quarter of an inch wide and one inch long. This slot was placed in the middle of the pipe. First, the nozzle was turned so that the slot was toward the current of steam, and the percentage of priming was determined. The nozzle was next turned so the slot was sidewise, and the percentage of moisture was redetermined. The nozzle was finally turned all the way round so that the steam struck the side opposite the nozzle. In the latter case the percentage of priming as shown by the calorimeter was greater than for either of the others, as has been stated in the paper. This tends to show that the moisture in the steam will cling to a nozzle and creep around it so as to be drawn in by the currents of the steam which enter the orifices in its sides.

Digitized by Google

Prof. R. C. Carpenter.—The subject of Professor Jacobus's paper seems to the writer to be confined to that important part of calorimetry which relates to the selection of a correct sample of steam from the main steam-pipe. The experiments seem to have been performed, not with a pure throttling calorimeter, but with a combination of water-separating device and calorimeter. The limits of the throttling instrument are much narrower than that of the instrument described; on the other hand, the radiation losses are much less, for the reason that the surface exposed is much smaller. The paper shows very large errors, indeed, due to the type of calorimeter used, but these are probably in great part due to the

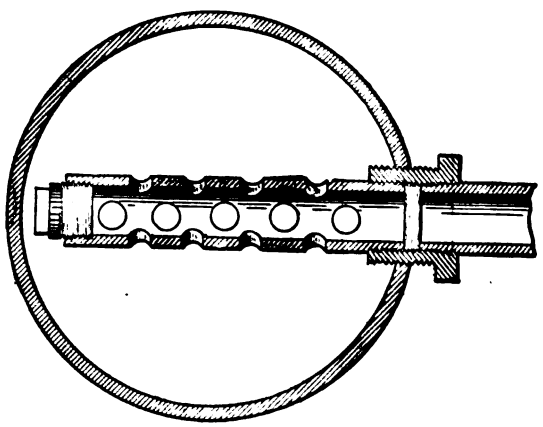

FIG. 144.

variation in the sample of steam supplied and are not in any case to be charged to the instrument. The general conclusions which Professor Jacobus draws, I am very happy to find, are quite in accord with the results of some experiments made under my direction and published in Vol. XII. of the *Transactions*, pages 856 to 871, "Notes Regarding Calorimeters." The results of the experiments made at that time, and of a number made since, indicate a very great difference in the character of the sample depending upon the form and position of the collecting nipple. At that time an extended series of experiments were made with perforated connecting nipples, and also with adjustable nozzles arranged to take samples of steam from various portions of the steam-pipe. A considerable difference was found in the results, the error being for small percentages of moisture less than defi-

Digitized by Google

nitely measurable when a collecting nipple was inserted in a vertical pipe, as shown in the adjacent figure (Fig. 144), with the holes about one-quarter of an inch in diameter. Tests were also made with adjustable nozzles arranged to take steam from different portions of a horizontal pipe, the results obtained being as follows for that case:

True Amount of Moisture. Per cent.	Moisture in Sample Supplied. Per cent.	Error in Sample. Per cent.	Position of Nozzle.
1.71	1.56	+ 0.15	Taking steam from top of pipe.
1.65	1.90	− 0.25	Taking steam from bottom.
1.52	2.25	− 0.73	Facing the current.
1.53	2.57	− 1.04	Opposing the current.
1.47	1.85	− 0.38	No perforations. Extending two-thirds across the pipe.

FIG. 145.

These experiments indicate an extreme variation in quality simply due to drawing the steam from various portions of the steam-pipe, the error in the sample of steam supplied varying from slightly over one per cent. of water in excess, in one case, to about one-sixth per cent. deficiency in another. As the per cent. in moisture increases, these differences are no doubt increased very much. When the steam contains more than about three per cent. of moisture, I know from actual observation that the greater portion of this moisture exists as water, which, in a horizontal pipe, remains near bottom and is not mixed to any appreciable extent with the steam. The question then of obtaining a fair sample depends upon where you happen to tap this stream. If you can glean off the proper weight of water, and the correct

Digitized by Google

amount of steam, you will have a perfectly fair sample. This is a very difficult thing to do, and I do not believe that any general method can be devised that will give a perfectly fair sample for all cases. This is certainly true for sample from a horizontal pipe, although possibly not from a vertical steam-pipe.

The experiments which Professor Jacobus has made cover a greater range, so far as moisture is concerned, than ever occurs in any working plant; consequently, the errors due to imperfect sampling appear much worse in his investigation than would usually be found in practice. It is true that occasionally excessive amounts of water are thrown over by boilers, but usually the amounts run very much less than two per cent. For small amounts of moisture in steam, the calorimeter errors, especially with the simple throttling instrument, or with the steam-jacketed separating instrument, are exceedingly small, and I think that we have established the fact that when the per cent. of moisture is less than three, the error in obtaining the sample of steam from a perforated collecting nipple should never be in excess of one-fourth of one per cent. When the amount of water is in excess, it then becomes a very different matter indeed. In connection with the test of steam separators at Sibley College, in 1891, we made an extended investigation on this subject. Without going into details, the results of our conclusion were; first, that we could not obtain a fair sample of steam from a horizontal pipe when there was moisture in excess of three per cent; second, we could obtain a sample which was within two or three per cent. of the correct amount, by drawing from a vertical pipe shortly below an elbow. The water and steam impinged in making the bend so as to be well mixed, at least for a short distance.

The experiment presented by Professor Jacobus seems to show that the sample of steam obtained by the calorimeter is very much more wet than the average supplied to the condenser. I am unable to tell from the text of his paper whether the results given in Table I. were corrected for radiation in the calorimeter. If a small amount of steam were flowing through the calorimeter, this error would be of considerable magnitude, and might account for the differences found when the steam was nearly dry. It is, however, perfectly possible to obtain steam much dryer than the average. I am of the opinion that in the case of very wet steam the chances would be equally good of providing a sample for the calorimeter which would be too dry. As an illustration, I will cite

Digitized by Google

the results of a single experiment made within the last month in a test of a Stratton separator. The apparatus for this test was arranged as shown in the accompanying diagram (Fig. 146). The main steam pipe (CAG) was arranged so that it could be surrounded by a jacket at R which could be filled at any desired height with water, this water being used to condense the steam which was supplied to the separator. The steam discharged from the separator was condensed in a surface condenser, K. The total percentage of water was determined by a method essentially the same as that described by Professor Jacobus, and is correct within a very small percentage of error. A calorimeter of the separating type, steam-jacketed to prevent loss by radiation, was inserted at A in the extreme end of the horizontal pipe, and another one exactly the same was attached at B, in a vertical pipe, by a connecting nipple of the form described.

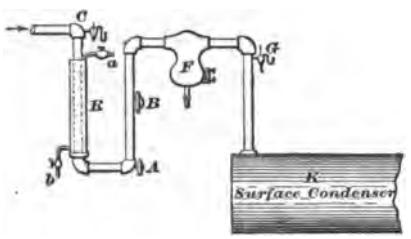

FIG. 146.

Throughout all these tests, the steam discharged from the separator was essentially uniform in quality, and containing, in every case, less than one per cent. of moisture. The percentage of moisture indicated by calorimeter A, when less than five per cent., was in practical agreement with the true quantity. When the moisture was in excess of that amount, this calorimeter showed a very great excess of the true amount.

The calorimeter B, taking a sample from the vertical pipe, showed, during the entire series of runs, nearly dry steam, a tabulation of the results being as follows:

No. of Run.	Actual Moisture %.	Moisture shown by Calorimeter.	
		A	*B*
1	5.7	5.8	0.7
2	17.2	39.2	1.1
3	15.31	38.1	1.5
4	15.6	42.8	0.6
5	20.9	39.7	0.5

In this case one calorimeter was supplied with a sample of steam which was practically dry, while the other one received a great excess of water. The experiments made by the writer would indicate that in the ordinary location selected for the calorimeter,

Digitized by Google

the sample of steam is likely to be better, rather than worse, than the average, but where the percentages of moisture are large, the writer has doubts regarding the possibility of obtaining any samples of steam which would be certain to represent the mean condition.

The errors which are due to the calorimeters themselves, and which are independent of the moisture contained in the steam, do not seem to have been considered in this case. In the article referred to in Vol. XII. are given several experiments showing the effect on results of arranging several calorimeters in the same manner, and noting the effect of radiation when covered with hair-felt or exposed to the air, and when discharging different amounts of steam. The results would indicate that where there was as much steam flowing as would pass through a nozzle one-eighth of an inch in diameter the loss from radiation, clothed or unclothed, rarely made one-tenth of one per cent. difference in the result.

From these experiments the writer concluded it important to know the back-pressure in the calorimeter caused by the exhaust pipe leading from the calorimeter, as it often influenced the results to a great extent. The writer also found that somewhat more accurate results were obtained by using no insulating device to prevent the flow of heat from the main steam-pipe through the metallic walls to the calorimeter. There is always some loss of heat, and this seems to be partly compensated for, by using metallic connections. In order to determine the actual loss in temperature due to radiation, the writer had some experiments made in which two calorimeters taking the same quality of steam were directly compared. One calorimeter was clothed with a thick covering of hair-felting; the other was surrounded by an oil bath in the vessel *CDFE*, as shown in Fig. 147. The oil was heated by means of steam passing through the coils *A* and *B*, until a thermometer immersed in the oil indicated a temperature one degree less than that in the calorimeter, the oil being maintained at that temperature, which was so nearly that inside the calorimeter that sensible radiation would be impossible. The result of this experiment

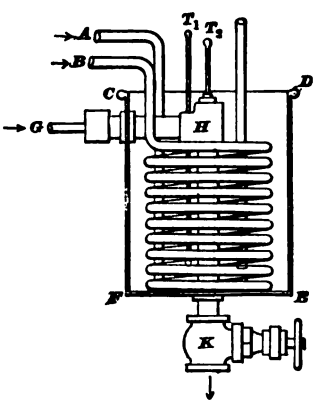

FIG. 147.

Digitized by Google

indicated a loss from radiation sufficient to reduce the temperature in the calorimeter from eight-tenths to one degree. This, in any practical use of the instrument, is so small a quantity that it can be neglected, especially since it corresponds to only about one-twentieth of one per cent. of moisture. The form of the calorimeter as now used by the writer is shown in Fig. 148. Where the steam contains a large amount of moisture, the writer has used for some time a miniature steam separator

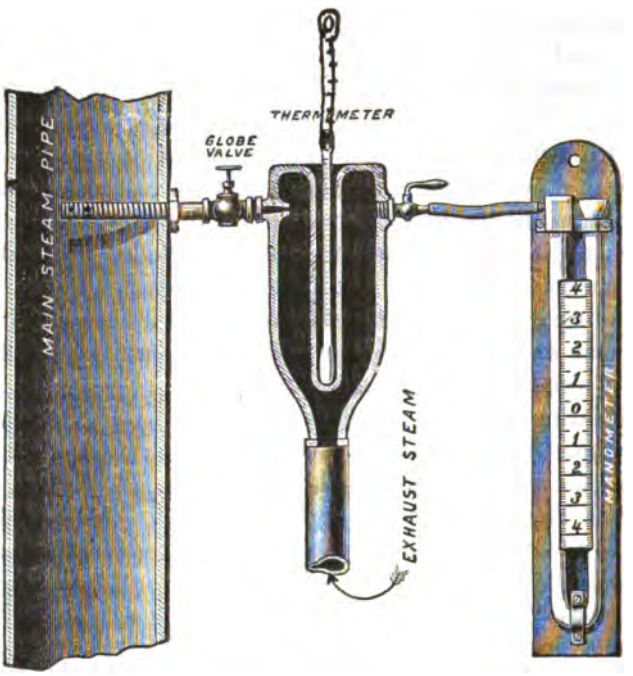

FIG. 148.

which is surrounded by a steam-jacket filled with high-pressure steam, and is provided with a water-glass and graduated scale to read one-hundredths of a pound. The total amount of dry steam flowing through the separator is caught in a can partially filled with cold water and condensed. The top part of this can carries a scale graduated to tenths of a pound for water at 100 degrees Cent. From the reading of the two scales can be obtained in the one case, the weight of moisture in the steam, and in the other the weight of dry steam. Small corrections for change of volume with temperature are not of significant value, and can be neglected.

Digitized by Google

This instrument has now been in extensive use for the past three years, and we have had an opportunity to compare it with a throttling calorimeter a great many times, and when properly handled the two instruments have shown in each case results

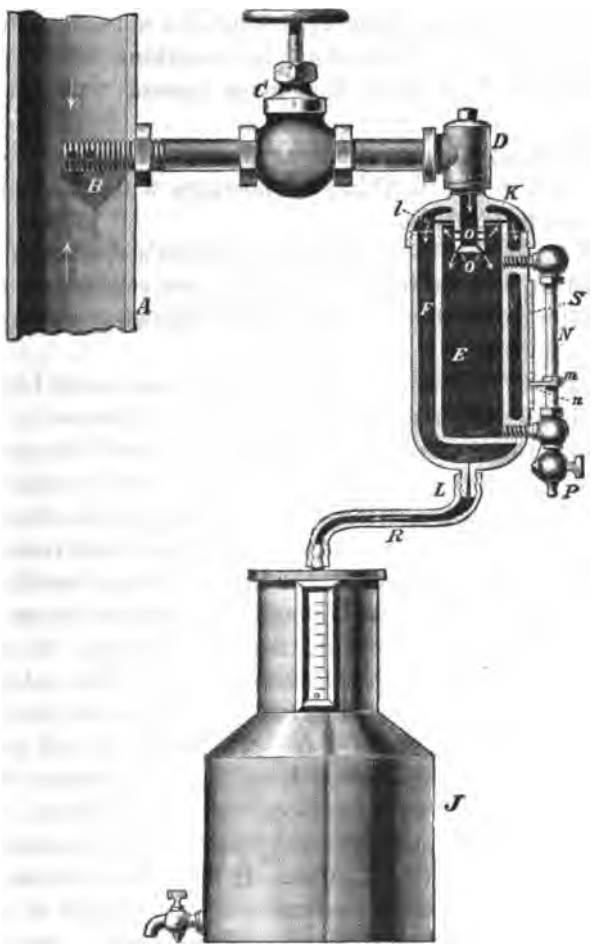

FIG. 149.

which are essentially the same. The form of this instrument is shown in Fig. 149.

Professor Jacobus.—I will say that the results were all corrected for radiation, and the radiation was determined in a careful way, as described in the paper, so that the point that Professor Carpenter raises about the radiation of the separator, etc., has been

Digitized by Google

covered. The only statement made in the paper is that the tests indicate that the various nozzles such as are now used in practice do not supply average samples of steam to the calorimeters. This, of course, does not imply that the calorimeter itself is wrong. The calorimeter itself is correct, as I have before stated.

Mr. Kent.—Can you tell us what kind of a nozzle you will use?

Professor Jacobus.—No, we have been working on this problem, but have not found a nozzle that gives correct results under all conditions.

The Chairman.—It seems to me on this calorimeter question we have got a first-rate thing to measure with, but we cannot get the thing to measure.

*Prof. D. S. Jacobus.**—Professor Carpenter's discussion was not read in full at the meeting, and as there are several notes I wish to make after examining it in detail the following matter is presented:

It appears to me that Professor Carpenter must have made many of his tests with a less velocity of flow of steam in the main pipe than was the case in my tests. He states that if the percentage of moisture is less than three per cent. the error in obtaining the sample of steam from a perforated collecting-nipple should never be in excess of one-quarter of one per cent.; and also remarks that his experiments would indicate that in the ordinary method of inserting the nipple for the calorimeter, the sample of steam is likely to be better, rather than worse, than the average. In a special series of my experiments it was shown that if the velocity was decreased to about one-third that which existed in the main steam-pipe during the experiments quoted in Table I. of my paper, the percentages of priming indicated by the calorimeter were less than the true amount. Such low velocities (fifteen feet per second), however, seldom occur in practice, and the results were therefore not included in the paper. It may, therefore, be possible that Professor Carpenter's conclusion that a sample of steam is likely to be "better rather than worse" applies to slow velocities, whereas my experiments show that this is not the case with velocities approaching those found in practice (upwards of fifty feet per second).

The experiments, Nos. 18 to 21, Table I., presented at the time of the meeting, show that the same percentage of error exists for rates of priming below two and a half per cent. as at the higher

* Author's closure, under the Rules.

Digitized by Google

percentage of priming. Professor Carpenter's conclusion that the error for such low rates should not exceed one-quarter of one per cent. is, therefore, not true for the conditions of my experiments. As very slow velocities tend to produce too low indications of moisture for the conditions under which my tests were made, and higher ones approaching those employed in practice tend to give indications which are too high, there may be a particular velocity for a given set of conditions at which a nozzle will give results which are nearly correct, and Professor Carpenter's tests may have been made with such a velocity.

In Professor Carpenter's tests with different forms of nozzles, presented in Vol. XII., the velocity is not stated, and from the arrangement shown in the sketch of his apparatus it appears that the discharge of steam from the three-inch main horizontal pipe was simply that of a drip valve. The velocity of the steam passing by the calorimeter nozzles may, therefore, have been comparatively slow. If the velocity had approached that existing in ordinary practice, the results for the various nozzles might disagree to a greater extent among themselves than is indicated by his tests.

From the sketch given by Professor Carpenter, showing the arrangement of a Stratton separator for testing, it does not appear that he determined the true percentages of moisture by methods entirely independent of calorimeter measurements; whereas, with the arrangement shown in Fig. 143, no calorimeter measurements were employed to obtain the true percentages.

In our experiments the steam was superheated on arriving at the drum *B*, Fig. 143; and the heat units per pound of steam corresponding to a given amount of superheat, as registered by the thermometers *D* and *C*, were determined by preliminary experiments. In these no water was injected into the steam-pipe, and the entire volume of superheated steam passing through the apparatus was then throttled and its temperature after throttling measured in the twelve-inch drum *N*.

From the results the effect of radiation was determined, so that coefficients were deduced representing the calorific equivalent of each degree of superheat as measured by the thermometers at *B* less loss by radiation. For the higher rates of flow the coefficient was found to be 0.47, and for the lower rates 0.45. These figures are equivalent to the specific heat of the steam less the radiation effect of the apparatus, but are not exact physical quantities, because the temperature indicated by the thermometers employed to measure

Digitized by Google

the superheat of the steam may not have given the correct average for all the steam passing through the drum in which they were placed. The drum itself was much cooler than the superheated steam near its centre, for with superheating to the extent of ten to fifteen degrees at the centre, water could be drained from the drip valve *Y*. It was the great difficulty of estimating the correct degree of superheating of the entering steam, that led to the tests to determine the coefficients given above.

At first it was thought that a portion of the discrepancy found in the tests with the small calorimeter might be due to the cooling effect of the low-pressure steam which came in contact with one side of the valve *M*, and which might tend to cool the main pipe into which the calorimeter was inserted at *L*. Such, however, was not the case, as a thermometer placed in a short well in the pipe directly over the calorimeter nozzle gave the same indications as a thermometer placed at *H*. The fact that the results given by the small calorimeter, and by the temperature in the twelve-inch drum, tend to approach each other for dry steam, also shows that the pipe into which the calorimeter nozzle was inserted could not have cooled to any great extent. Again, in the tests at low velocities of steam the readings given by the small calorimeter were less than should have been, which is in the reverse direction to the action that should take place if the pipe was cooled by conduction of heat to the valve *M*.

As I have been requested to present my methods in greater detail the appendix has been added to the paper since the meeting, showing how the above coefficients were calculated, together with the data and calculations for one of the tests.

Digitized by Google

DCXXIX.*

ON THE THEORY OF THE MOMENT OF INERTIA.

BY C. V. KERR, FAYETTEVILLE, ARK.
(Member of the Society.)

IT may be wondered what can be said on this topic which shall be new or worth while. But a well-known writer on applied mechanics has this to say in formulating a definition of force: "Nevertheless, it is a fact in mechanics, as well as in those sciences which attempt to deal with the facts and laws of nature, that correct definitions are only gradually developed, and that, starting with very imperfect and often erroneous views of natural laws and phenomena, it is only after these errors have been ascertained and corrected by a long range of observation and experiment, and an increased range of knowledge has been acquired, that exactness and perspicuity can be obtained in the definitions." Again, another said in substance some years ago, to a class of engineering students: "I give my students six months to understand the moment of inertia; but if the meaning is not grasped in that time the case is hopeless." These two statements exhibit the reason and the motive for this paper.

It seems that Christian Huygens, the Dutch natural philosopher (1629–1695), first isolated the expression, Σmr^2, in effecting a solution of the problem of determining the centre of oscillation of a compound pendulum. He employed it, however, without any particular designation, and it remained for Euler, the Swiss mathematician (1707–1783), to christen it "moment of inertia." It thus originated and was used purely as a mathematical expression; but the necessity does not arise for tracing its course through the writings of these and other founders of the science of mechanics. The present understanding of the term will be shown by quoting the definitions as given by the abler recent writers on mechanics:

* Presented at the New York meeting (December, 1894) of the American Society of Mechanical Engineers, and forming part of Volume XVI. of the *Transactions*.

Digitized by Google

WEISBACH.—The force of and the energy stored by a body in rotation depends principally upon the sum of the products $m_1r_1^2 + m_2r_2^2 + m_3r_3^2 + \ldots$. of the different elements m_1, m_2, etc., of the mass, and of the squares of the distances r_1, r_2, etc., from the axis of revolution. This sum is called the *moment of inertia*, and we will hereafter denote it by mr^2 or w.

RANKINE.—The *moment of inertia* of an indefinitely small body, or "physical point," relatively to a given axis, is the product of the mass of the body, or of some quantity proportional to the mass, such as the weight, into the square of its perpendicular distance from the axis. The moment of inertia of a system of physical points, relatively to a given axis, is the sum of the moments of inertia of the several points, that is, $I = \Sigma mr^2$.

WOOD.—The *moment of inertia* of a body is the sum of the products obtained by multiplying each element of the body by the square of its distance from an axis.

LANZA.—The *moment of inertia* of a body about a given axis is the limit of the sum of the products of the weight of each of the elementary particles that make up the body, by the squares of their distances from the given axis.

CHURCH.—This summation $\int z^2 dF$ of the products arising from multiplying each elementary area of the figure by the square of its distance from an axis is called the *moment of inertia* of the plane figure with respect to the axis in question; its symbol will be I.

The original conception of the term, moment of inertia, has apparently come down to us without material change. There is evidence, however, of dissatisfaction among the writers above as to the fitness of the term; thus, "it appears that some other term might be more appropriate," and again, "for want of a better the name is still retained." And yet it seems possible to invest the term with a meaning—not foreign, but native. To do this it will be necessary to begin by considering briefly the ideas conveyed by some of the fundamental terms.

Proceeding from the standpoint of the physicist, we may define *mass* as the absolute measure of quantity of matter, as opposed to *weight*, which merely measures the local attraction of gravity. The international unit of mass is the kilogram, which is the mass of a certain cylinder of platiniridium intended to represent the mass of a thousand cubic centimeters of water at its temperature of maximum density, 3.93 degrees C. There is

Digitized by Google

also the British imperial pound, the mass of a certain platinum weight intended to be so constructed as to equal 7,000 Troy grains. Two units of *length* are chiefly in use, the international meter, which is the distance at the melting-point of ice between the centres of two lines engraved upon the polished surface of a platiniridium bar, supposed to represent the $\frac{1}{10,000,000}$ of a quadrant of a terrestrial meridian; and the British imperial yard, which is the distance at 62 degrees Fahr. between the centres of two lines engraved on gold plugs inserted in a bronze bar. The universal unit of *time*, which also need not be defined, is the second, the $\frac{1}{86,400}$ part of the mean solar day.

Before going farther it should be observed that these standards are, in fact, arbitrary, simply prototypes. Thus, if an attempt were made to reproduce the meter by measurement of the meridian, the result, in all probability, would be a standard differing slightly in length from the present meter, for it is known not to represent correctly the assumed natural standard. However, any one of them, so far as we know, may serve anywhere in the universe as an absolute standard of measurement. The standard pound, although changing in weight from equator to pole, or from planet to planet, if weighed by the spring balance, is nevertheless a definite quantity of matter, which will in the lever balance equilibrate an equal amount of any other form of matter anywhere.

Suppose, for the sake of uniformity of units in mechanics, that we adopt the so-called *absolute* method of measurement, as opposed to the *gravitational*, which depends upon a varying attraction. In a question of measurement it will be safe to follow the lead of the physicists.

To resume the concepts in mechanics, *inertia* is the property of matter enabling it to resist a tendency to change its condition of rest or motion. *Force* is "an action between two bodies, either causing or tending to cause change in their relative rest or motion." It may be expressed as a pull or push in pounds. Since we cannot measure a force directly, it is necessary to measure it by its effects. Let the unit be that force which, acting for one second on the unit of mass, the standard pound, imparts to it a velocity of one foot per second. In illustration of the magnitude of this unit, the attraction of gravity would in the same time impart to the unit of mass a velocity of g feet per second. It must, therefore, equal g units of force, and hence

Digitized by Google

this unit is equivalent to the pressure or pull of $\frac{1}{g}$ pounds, or one half-ounce nearly. The unit thus defined corresponds to the *dyne* of the metric system, "which, acting for a second on a gram, generates a velocity of a centimeter per second." Both of these units make *mass*, not force, the arbitrary variable. That is appropriate, since force seems not to exist apart from the medium of matter.

Again, to impart unit velocity to w pounds will require a pull of $\frac{w}{g} = m$ units of force. *Mass*, therefore, in the dynamic sense, is a measure of the pull or push in pounds required to impart unit velocity in one second to a body of w pounds. Further, to impart to this body a velocity of v feet per second would require a pull or push of $\frac{w}{g} \cdot v = mv$ pounds. *Momentum*, then, is a measure of the force required to impart to w pounds a velocity of v feet per second in unit time.

Force, briefly, is an action between two bodies, and inertia is a resistance to change. A moving body imparting motion to a body at rest plays the part of an acting force, while the inertia acts as a resisting force. Momentum and inertia, then, are as action to reaction, and mutually convertible. Moreover, inertia is not a fixed quantity, but varies with the acting force.

Again, a moving body coming to rest under the action of a constant force passes over a space equal to one-half its initial velocity. Then the work done on it by the retarding force = *force* × *space* $= mv \times \frac{1}{2}v = \frac{1}{2}mv^2$, the expression for the *kinetic energy* of the moving body measured in foot-pounds.

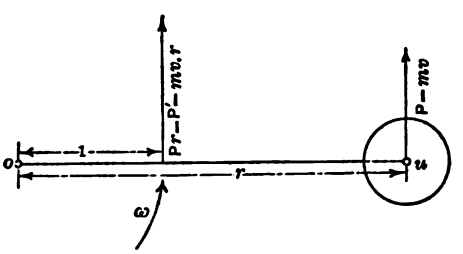

FIG. 150.

The moment of a force, P, acting as in Fig. 150, at the end of a lever arm, r, is measured by the product, Pr, and it may be replaced by a force, $P' = Pr = mv \cdot r$, at unit distance from the centre or fulcrum, o. And according as the unit selected is an inch or a foot, the value of P' will be expressed as *inch-pounds* or

Digitized by Google

foot-pounds. Now the work which the force P will do is determined by the space over which it passes while overcoming resistance; and likewise the work which the moving body w will do in coming to rest in one second will be $mv \cdot \frac{1}{2} v = m\omega r \cdot \frac{1}{2} \omega r = \frac{1}{2} m\omega^2 r^2$. Or, since the acting force, momentum, is equal to the resisting force, inertia, we may say that the *moment of inertia* of the body, w, is equivalent to a force, mv, acting at a given distance, r, from a centre, o. The attention should here be called to the fact that ω and v are considered to be imparted or destroyed in one second.

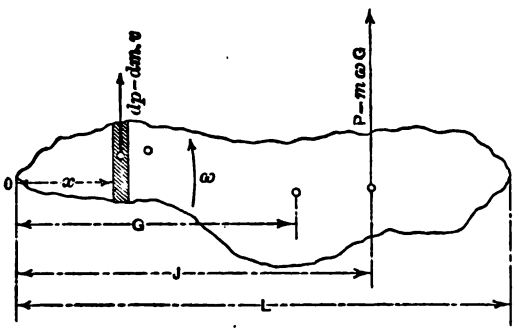

FIG. 151.

The centre of gravity of such a body, as shown in Fig. 151, is the point at which we may place a force equal to its weight, and equilibrate the moments about o of the weights of all the particles composing the body. If we let G be the distance from the axis o to the centre of gravity, the expression for its value will be

$$G = \frac{\int_o^l dm \cdot x}{\int_o^l dm} = \frac{\int_o^l \phi(x)\, dx \cdot x}{\int_o^l \phi(x)\, dx}$$

in all cases where the magnitude of the differential element is a function of the distance from the axis, or origin of moments.

If we consider the forces due to accelerating the differential elements to an angular velocity, ω, each of which is

$$dp = dm \cdot v = dm \cdot \omega x,$$

there will be found in this case a point of application of a force, $P = \int dm \cdot v$, which will equilibrate the moments of inertia of all the differential elements. Assuming the forces producing

Digitized by Google

acceleration to act normally to a radius, the total accelerating force will be

$$P = \int dm \cdot v = \int dm \cdot \omega x = \omega \int_o^l \phi(x)\, dx \cdot x,$$

where the differential element is a function of the radius, x. If we multiply the equation $G = \dfrac{\int_o^l \phi(x)\, dx \cdot x}{\int_o^l \phi(x)\, dx}$ by ω, and then clear of fractions, we shall have

$$\omega G \int_o^l \phi(x)\, dx = \omega \int_o^l \phi(x)\, dx \cdot x = P.$$

By comparing the first and third members of this equation we see that the *total accelerating force is equal to the mass* × *velocity of centre of gravity*, or, in general,

$$P = m\omega G = mv_g.$$

The moment of each differential force will be

$$dI = dp \cdot x = dm\omega x^2 = \omega\phi(x)\, dx \cdot x^2,$$

and $$I = \int dp \cdot x = \omega \int_o^l \phi(x)\, dx \cdot x^2 = \textit{total moment of inertia.}$$

The point of application of the resultant or equilibrating force will be

$$J = \frac{I}{P} = \frac{\int_o^l dm \cdot \omega x^2}{\int_o^l dm \cdot \omega x} = \frac{\omega \int_o^l \phi(x)\, dx \cdot x^2}{\omega \int_o^l \phi(x)\, dx \cdot x} =$$

distance from axis to *centre of percussion*. Or, putting the last equation in another form, in which $I = PJ$, we see that the *moment of inertia* of a body is measured by the product of a force equal to the sum of all the accelerating forces by the *radius of gyration*, or distance from the axis to the resultant of the accelerating forces; and that, consequently, the moment of inertia may be expressed as other moments, in equivalent foot or inch pounds. Further, if at the distance J from the axis a force P be placed, it will accelerate the body in the same way as the existing forces. And if the body be conceived as replaced by the accelerating forces, the moment of inertia, I, will represent a force which, placed at unit distance from the axis, will produce the same turning effort as the existing forces.

Digitized by Google

If more than one body revolve about the same axis, the total accelerating force will be $P_r = P_1 + P_2 + \ldots P_n$, and the total moment of inertia $I_r = I_1 + I_2 + \ldots I_n$. Hence, $J_r = \frac{I_r}{P_r} = \frac{\Sigma I}{\Sigma P}$. Proceeding in this way we may also show that the moment of inertia about parallel axes, one of which is a gravity axis, will be

$$I_a = I_g + \omega m d^2 = m\omega GJ + m\omega d^2 = \omega m\,(GJ + d^2),$$

in which I_g is about the gravity axis and d is the distance between axes; and that the so-called polar moment of inertia is $I_p = I_x + I_y$, as usual.

Since $I = PJ$, it follows that the work done on the body in creating an angular velocity, ω, is $= force \times space = P \cdot \frac{1}{2} v_J = m\omega G \cdot \frac{1}{2} \omega J = \frac{1}{2} \omega \cdot m\omega GJ = \frac{1}{2} \omega I$. Hence, if $E =$ kinetic energy, we shall have for any rotating body

$$E = \tfrac{1}{2} \omega I.$$

It will probably be sufficient to show the application of the foregoing principles to select two cases which may be considered typical of the usual problems in moment of inertia. Assume,

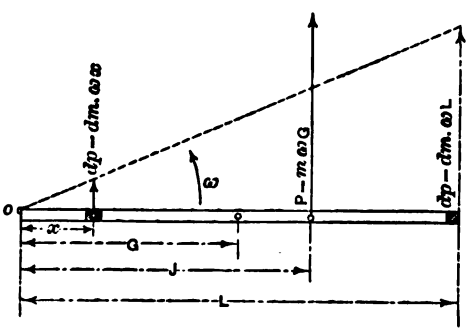

FIG. 153.

as indicated in Fig. 152, a thin rectangle rotating about an axis, o, at one end. Let b = width, t = thickness, and δ = mass per unit volume. Then,

$$P = \int_o^l dm \cdot v = \delta bt\omega \int_o^l x dx = \tfrac{1}{2}\, \delta bt\omega l^2 = mv_g,$$

$$l = \int dp \cdot x = \delta bt\omega \int_o^l x^2 dx = \tfrac{1}{3}\, \delta bt\omega l^3,$$

and

$$J = \frac{I}{P} = \frac{\frac{1}{3}\delta bt\omega l^3}{\frac{1}{2}\delta bt\omega l^2} = \tfrac{2}{3} l.$$

Digitized by Google

It will be seen that as the differential accelerating force, $dm \cdot v = dm \cdot \omega x$, varies directly as the distance from the axis, the value found for J puts it at the centre of gravity of the accelerating forces. It is, also, the *centre of percussion* for the body assumed. It may be of interest here, also, to point out the fact that J is independent of the velocity of rotation; and, further, to compare the usual expression for moment of inertia with that proposed, that is,

$$I = m\omega GJ = mk^2, \text{ from which } k = \sqrt{\omega GJ}.$$

If we make $\omega = 1$, then $k = \sqrt{GJ}$, in other words, for an angular velocity of unity the so-called radius of gyration, k, is a mean proportional between the centres of gravity and percussion. The value, k, is sometimes said to be the distance from the axis to the point at which, if all the mass were concentrated, the moment of inertia would be the same. That is true here for $\omega = 1$. But suppose we assume values of ω first greater, then less, than unity. We shall have

$$\begin{aligned} k = \sqrt{\omega GJ} = \sqrt{GJ}, \text{ for } \omega &= 1 \\ = 2\sqrt{GJ}, \text{ for } \omega &= 4 \\ = 10\sqrt{GJ}, \text{ for } \omega &= 100 \\ = \infty, \text{ for } \omega &= \infty \\ = \tfrac{1}{2}\sqrt{GJ}, \text{ for } \omega &= \tfrac{1}{4} \\ = \tfrac{1}{10}\sqrt{GJ}, \text{ for } \omega &= \tfrac{1}{100} \\ = 0, \text{ for } \omega &= 0. \end{aligned}$$

It would seem from this that angular velocity is not negligible in determining the moment of inertia. However, if we wish to find the distance from the axis at which to place the mass m for an equivalent moment, we may put

$$mv \cdot r = m\omega r^2 = m\omega GJ = I,$$

from which $r = \sqrt{GJ}$. This will always hold true for equal masses and velocities.

If we resume here the expression for kinetic energy of the rotating body, we find

$$E = \tfrac{1}{2}\omega I = \tfrac{1}{2} m\omega G \cdot \omega J = \tfrac{1}{2} m\omega^2 k^2 = \tfrac{1}{2} mv_k^2,$$

Digitized by Google

in which k is a mean proportional between the centres of gravity and percussion, and v_k is the velocity of a point at the distance k from the axis. The difference between the moment of inertia of a rotating body and its kinetic energy should now be evident.

For the second case, assume a thin, circular plate of radius R, and thickness t, to revolve about its axis, o, as indicated in Fig. 153. Then we shall have

$$dp = dm \cdot v = \delta t x dx d\theta \cdot \omega x,$$

and
$$P = \int dm \cdot v = \delta t \omega \int_o^{2\pi} \int_o^r d\theta \cdot x^2 dx = \tfrac{2}{3} \delta t \omega \pi r^3 = m v_g.$$

$$I = \int dp \cdot x = \delta t \omega \int_o^{2\pi} \int_o^r d\theta \cdot x^3 dx = \tfrac{1}{2} \delta t \omega \pi r^4.$$

Then,
$$J = \frac{I}{P} = \tfrac{3}{4} R.$$

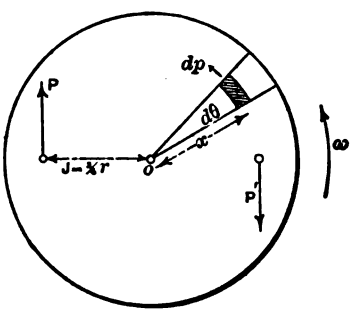

FIG. 153.

The value of J found in this case recalls the statement that "no centre of percussion exists when the axis traverses the centre of gravity of the body." The apparent contradiction may be explained by substituting for the single force P, in Fig. 151, the couple PP' in Fig. 153. In neither case will there be a shock on the axis, which is the essential feature of the centre of percussion.

It is customary to employ the expression for the moment of inertia in all cases where the term mk^2 occurs. The foregoing analysis is intended to show its meaning and limitations where mass and velocity are concerned. But there is a large class of computations of the highest importance in which the moment

Digitized by Google

of inertia is employed, although mass and velocity do not enter in any form. If a horizontal beam resting on end supports be loaded centrally, uniformly or in any other manner, the load will be supported by stresses in tension and compression set up in the material of the beam. These stresses are assumed to vary directly as the distance from what is known as the neutral axis, and within the elastic limit this is probably true. If we let s be the stress in the outer fibres of a beam, as in Fig. 154, then at

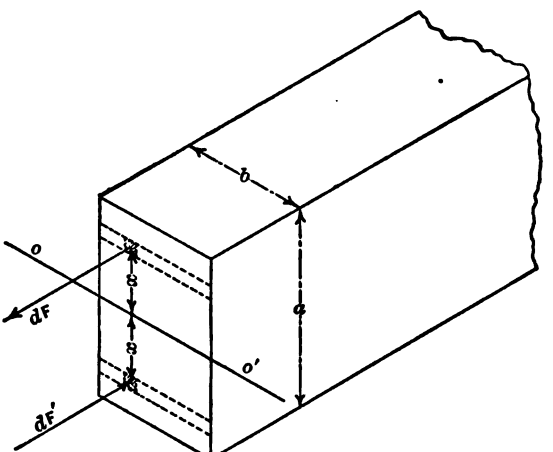

FIG. 154.

the distance x from the axis oo' the stress per square inch will be $\frac{2sx}{a}$. The load supported by an element at distance x from the axis will be

$$dF = \frac{2s}{a} x dx dy,$$

and $F = \frac{2s}{a}\int_o^{\frac{a}{2}}\int_o^b x dx dy = \frac{1}{4} sba =$ stress on each side of axis, or one-half the total stress in the beam. And since there is an equal and opposite stress set up at an equal distance, x, beyond the axis, we shall have as the moment of the couple dF, dF',

$$dR = dF \cdot 2x = \frac{4s}{a} \cdot x^2 dx dy,$$

and $R = \frac{4s}{a}\int_o^{\frac{a}{2}}\int_o^b x^2 dx \cdot dy = \frac{1}{6} sba^2 =$ total moment of resistance.

Digitized by Google

Now, the total stress on either side of the axis may be replaced by the resultant forces forming the couple FF', whose arm may be found by dividing the total moment by the total stress on one side of the axis, that is,

$$S = \frac{R}{F} = \frac{\frac{1}{6} sba^2}{\frac{1}{4} sba} = \tfrac{2}{3} a,$$

which puts the points of application of the resultant forces at two-thirds the distance from the axis to either side for this particular case. A comparison of this result with the moment of inertia for a thin rectangle about a gravity axis will show that *stress* replaces *mass* and *velocity;* and also that the centre of stress, S, coincides with the centre of percussion, J. In general,

$$\frac{dF}{dP} = \frac{s}{\delta \omega a} = \frac{\text{stress in outer fibres}}{\text{momentum of outer masses}},$$

$$S = \frac{\int dF \cdot x}{\int dF}, \text{ and } J = \frac{\int dP \cdot x}{\int dP}.$$

From which it appears that both S and J are located at the centres of gravity of stresses or accelerating forces; and, since these stresses and forces are assumed to vary directly as the distance from the axis, these centres of gravity must coincide, that is, S and J are equal for like conditions.

The fundamental difference between these two moments thus appears to be that *I depends upon mass and velocity, while R depends upon stress alone, produced by forces directly applied and not producing motion.*

A probably correct idea of the use actually made of the moment of inertia, $I = mk^2$, may be obtained from works on applied mechanics, which are, of course, intended for the use of engineers. Thus, Professors Lanza and Church offer, as a general form of the *moment of flexure,*

$$M = \frac{pI}{e} = \frac{pI}{y},$$

in which p is the stress in the extreme fibres and e the distance from neutral axis to those fibres. Now, if we make $\frac{p}{e} = 1$, that

Digitized by Google

is, if the stress one inch from the neutral axis is one pound per square inch, then we shall have $M = I = mk^2$, or the moment of flexure will be numerically equal to the moment of inertia. The latter moment holds true, it will be remembered, when the velocity of a point at one foot from the axis is one foot per second.

Again, Professors Reuleaux and Unwin give, in their section tables for various forms of beams, besides the usual values for I, values for a "section modulus," which in general form is

$$Z = \frac{I}{e} = \frac{I}{y},$$

where $y = e$ is the distance from neutral axis to the extreme fibre. This differs from the general form of the moment of flexure by making the stress, r, equal to unity in the extreme fibre instead of at one inch from the axis. Thus, in the case of a rectangular beam, the section modulus is

$$Z = \frac{I}{e} = \tfrac{1}{6} bh^2,$$

which is equal to the moment of resistance, R, found above with s, the stress in extreme fibre, equal to unity.

And in a *Pocket Companion*, issued by Carnegie, Phipps & Co., as edited by C. L. Strobel, C. E., for the use of engineers, architects, and builders, we find the expression for the moment of resistance

$$R = \frac{I}{n},$$

where the quantities have the same meaning as in the section modulus above.

There may be a fancied convenience in using the moment of inertia indifferently for cases involving momentum alone or for stress alone, but it is not evident, and it certainly does not lessen the labor of those whose business is to teach the true meaning and correct application of these principles. The moment of inertia applies to solid bodies revolving with a known velocity about an axis which in practice is fixed mechanically, while the moment of resistance applies to plane sections of beams supporting a load. The incongruity of applying the moment of inertia

Digitized by Google

to the case, for instance, of the top chord of a truss bridge, where velocity is certainly not desired, will be seen at once. Even in tabulating values of I and R it would probably be found equally convenient to list each value complete in itself, the I's with the factor of velocity and the R's with the factor of stress. Since the distance from the axis to the centre of percussion is found to be the same as the distance to the centre of stress, the expressions for S and J would coincide in form. The question will not be followed in all its ramifications, as enough has now been developed to show the main points at issue.

It may be useful by way of illustration to apply these principles, in so far as they contain new features, to familiar subjects. Take first the case of the connecting-rod for an 8 by 24 Corliss engine, running at 102 revolutions per minute, or 1.7 revolutions per second. The weight of the rod is 71 pounds, and its mass is 2.2. The length between centres is six feet, and, being symmetrical, its centre of gravity is three feet from centre of wrist-pin, or $G = 3$ feet. Now, to find J we may use the fact that the centres of percussion and oscillation coincide, and further, that the length of a simple pendulum vibrating in the same time as a given compound pendulum is determined by the formula

$$t = \pi \sqrt{\frac{l}{g}}, \text{ or } l = \frac{t^2 g}{\pi^2} = 3.26\, t^2.$$

Then, by making $J = l$, we have at once

$$J = 3.26\, t^2.$$

The time of the rod for 200 vibrations, when swinging about a knife edge at the centre of wrist-pin, is 3 minutes 48 seconds, or $t = 1.14$ seconds. Hence

$$J = 3.26 \times 1.14^2 = 4.24 \text{ feet.}$$

The linear velocity of the crank-pin for this case will be $= 2\,\pi n = 2 \times 3.1416 \times 1.7 = 10.68$ feet per second. Then the angular velocity of the rod about the wrist-pin will be $10.63 \div 6 = 1.78$ feet per second. Hence we shall have

$$P = M\omega G = 2.2 \times 1.78 \times 3 = 11.75 \text{ pounds.}$$

Digitized by Google

Also, $I = PJ = 11.75 \times 4.24 = 49.81$ pounds,

at one foot from the wrist-pin. Finally we shall have, for the kinetic energy,

$$E = \tfrac{1}{2}\omega I = .89 \times 49.81 = 44.33 \text{ foot-pounds.}$$

In this way the quantities J, P, I, and E may be determined for any revolving body for which m, G, and t may be found experimentally.

A second illustration may be taken from the fly-wheel of an engine in such a way as to exhibit both the moments of inertia and resistance. If the resultant momentum of hub, arms, and rim be determined, its measure will be a force, P, acting usually very near the outer end of the arm. Since the magnitude of this force depends upon the change in velocity of the wheel, it follows that it may vary from nothing for uniform rotation to something enormous if the wheel were suddenly stopped. Now, the arm of the fly-wheel is in the condition of a beam fixed at each end, the support at one end being liable to displacement at right angles to the axis of the beam. Thus, in Fig. 155, the arm under stress tends to leave the original position and form, and to take that indicated by the dotted lines. The inertia of the wheel supplies a force, P, acting at or near the outer end of the arm, which is transmitted through the arm, to be opposed finally by the torsion couple TT' in the shaft.

Assuming the origin at o, we shall have, for any section at distance x from o,

$$EI\frac{d^2y}{dx^2} = Px - m_o, \quad \ldots\ldots\ldots\ldots \quad (1)$$

and $$EI\frac{dy}{dx} = \tfrac{1}{2}Px^2 - m_o x + (C = o, \text{ for } x = o) \quad \ldots \quad (2)$$

To determine m_o, make $x = l$ in equation (2), obtaining

$$EI\frac{dy}{dx} = o = \tfrac{1}{2}Pl^2 - m_o l,$$

from which $m_o = \tfrac{1}{2}Pl$. Substituting this in equation (1), we have

$$EI\frac{d^2y}{dx^2} = Px - \tfrac{1}{2}Pl. \quad \ldots\ldots \quad (3)$$

Digitized by Google

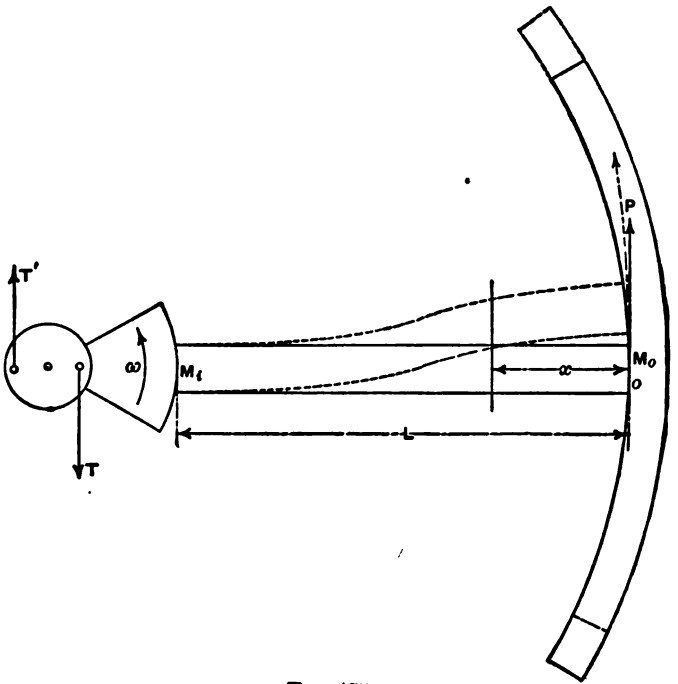

FIG. 155.

If we put equation (3) $= o$, we obtain $x = \frac{1}{2}l$ as the point in the arm at which there is no bending moment and at which the curvature of the arm reverses. The greatest values of the bending moment will be obtained for $x = o$ and $x = l$, for which equation (3) becomes

$$EI\frac{d^2y}{dx^2} = o - \tfrac{1}{2}Pl = -\tfrac{1}{2}Pl,$$

and

$$EI\frac{d^2y}{dx^2} = Pl - \tfrac{1}{2}Pl = \tfrac{1}{2}Pl.$$

This result must be interpreted to mean that m_o, the moment at the outer end of the arm, is equal to m_i, at the inner end, but opposite. If the outer end of the arm were free, we should have $m_o = o$, and $EI\frac{d^2y}{dx^2} = Px = Pl$, for $x = l$, or double the existing moment at the inner end of the arm.

Opposed to the bending moment of the force P, the mo-

Digitized by Google

ment of inertia of the wheel is the moment of resistance of the arm. The most common section of fly-wheel arm is an ellipse with the long axis in the plane of the arm. Proceeding as with Fig. 154, we may obtain for the moment of resistance of the ellipse about the short axis

$$R = \tfrac{1}{4}\pi sba^2,$$

in which s is the stress in extreme fibre, a the semi-major, and b the semi-minor axis. Equating the greatest bending moment to the moment of resistance of the arm,

$$\tfrac{1}{2}Pl = \tfrac{1}{4}\pi sba^2,$$

from which $s = \dfrac{2Pl}{\pi ba^2}$, or $\pi ab = \dfrac{2Pl}{sa}$, enabling calculation to be made for stress at the weakest section, or of the necessary area of arm for any given conditions. The points at which an arm would break under sudden stoppage of the wheel would be the forward side at the rim, and the after side at the hub. The stresses thus produced may be illustrated by a homely experiment familiar to farmers. Grasp a long, slender corncob firmly at each end. The cob will break in three pieces if one hand is moved at right angles to the cob while the parts within the hands remain parallel. And the fractures will begin on opposite sides of the cob, near the hands.

Now it so happens that among the numerous fly-wheel accidents reported in engineering periodicals during the last two or three years is one which took place under the condition of sudden stoppage assumed in the foregoing analysis. This accident occurred at the works of the American Straw Board Company, of Tiffin, Ohio, during the past winter. The engine was a 24 by 42 Harris-Corliss, running a nine-ton fly-wheel at 72 revolutions per minute. While running at normal speed the follower plate of the piston broke in two, one half turning sidewise in the cylinder and stopping the piston short at about twelve inches from the end of the stroke. The fly-wheel collapsed; *every arm was broken off close to the hub and close to the rim.* Further, the whole wreck fell into the wheel-pit, with the exception of one of the four pieces into which the rim parted, showing that centrifugal force had little to do with the failure of the wheel. The cylinder and valve-gear were uninjured, and there was no loss of life.

Digitized by Google

The notion of treating the subject in this manner was provoked by the remark quoted in the opening paragraph, which indirectly expressed the difficulty of imparting to students a clear understanding of this difficult question. The development has been guided more or less by accepted ideas and forms. The effort has been made, and with some success, to invest that "barren ideality," the moment of inertia, with a distinct and physical meaning, so that it may be kept where it belongs. Experience as a student and as a teacher in engineering leads to the conviction that the method thus outlined will enable the student to comprehend and the engineer to employ with greater facility the inertia of matter and the phenomena depending upon it. Provided no flaw in theory is found, these moments of inertia and of resistance, each with its own meaning and application, should win their way into common use.

DISCUSSION.

Prof. F. R. Hutton.—Mr. A. K. Mansfield, member of this Society, has called the speaker's attention to a short paper of his, written in 1875, and published on page 161 of Volume LXX. of *The Journal of the Franklin Institute*, in the issue of September of that year.

Mr. Mansfield states that so far as he knows this was the first correct solution of the strains in the arms of a fly-wheel under the conditions assumed, and the references in the last part of Mr. Kerr's paper have induced him to call the attention of those interested to this early study of the subject.

In my opinion, to quote from discussion held while this paper was under consideration, it is not true, as is stated on the 4th page of the paper, on the 19th line, that momentum and inertia, in the usually accepted senses, are mutually convertible, except in the special case where certain values attach to each. It is calculated to mislead when inertia, in the same paragraph, is stated not to be a fixed quantity. It is fixed for a given mass and a given velocity, and while the intensity of an impulse is measured both by the mass and the velocity, this is true only of an impulse, and not for a force acting through any measurable time.

Furthermore, it would appear that the term "moment of inertia" has been used as synonymous with the expression "the moment of the inertia," to which it can only be equal, as before,

Digitized by Google

under certain special assumptions. The statement criticised appears at the top of the 7th page of the paper.

Prof. De Volson Wood.—I think the definition given by the author on the 6th, 8th, and 9th pages of his paper, is not the recognized moment of inertia. On the top of his 6th page he has written $dp = dmv$, in which he uses v not as acceleration but as general velocity. As a result, he finds that I depends upon angular velocity, when in fact it does not.

If I correctly understand the drift of this paper, its aim is not to substitute a new term for an old idea, but to give a physical conception to an old term. The term originally referred to "mass," but by an extension of the definition it is made to include weight, lines, surfaces, and volumes, so that one may now with propriety speak of the moment of inertia of a circle, of a square, etc. Recognizing this fact, I made a definition which would include all such as has been quoted by the author among his standard definitions. Rankine's definition admits of the same extension.

The expression is not in the form of a "static moment," inasmuch as it involves the square of an arm instead of the first power, and the propriety of retaining the term "inertia" is questioned by some; but the term "moment of inertia" is in the literature of the science and is likely to remain, so that it is a proper subject for discussion.

The expression arises in the solution of certain problems involving rotation. If F be the resultant of the forces producing rotation, and a its arm in reference to the axis of rotation, then it is found that

$$Fa = \Sigma mr^2 \frac{d^2\theta}{dt^2},$$

where θ is the variable angle described by any arm r. The term Σmr^2 is not a force, neither does it involve any element of force, neither is it a mass. Any attempt to substitute for it any magnitude which obscures the "product of an element into the square of an arm" is liable to mislead; and yet such a magnitude may be substituted, and I cannot say that it does not satisfy some students better than the use of the fundamental expression. Thus, let M be a mass concentrated at distance unity from the axis, and of such magnitude that

$$M \cdot I^2 = \Sigma mr^2,$$

Digitized by Google

then the "moment of inertia" equals *numerically* a mass which, if concentrated at a unit's distance from the axis, all the circumstances of rotary motion will be the same as for the distributed mass.

The numerical equivalent is not the thing itself. Thus, to illustrate, momentum is Mv; it is not a force, nor, generally, the measure of a force, for we have, when the force is constant, $Ft = Mv$, and if $t = 1$, then $F = Mv$; that is, if the momentum Mv be produced by a constant force acting for one second, the momentum equals, *numerically*, the force producing it.

The length of a cylinder may equal, *numerically*, that of a pocket rule, but the cylinder is not a pocket rule.

Prof. Gaetano Lanza.—That moment of inertia, according to the generally accepted definitions, is merely a name for a mathematical expression, is true, but I fail to see any good reason for attempting to endow it with a physical meaning, as Professor Kerr proposes.

His principal argument seems to be that such a change would result in greater clearness of conception on the part of the student; but my own experience as a teacher is that the best way to make the matter plain to the student is to adhere strictly to the definition which makes it a purely mathematical expression, and to remove from his mind, as quickly as possible, and as effectually as possible, any desires he may have to find for it a physical meaning (desires frequently found in the case of beginners).

Of course, there are a great many physical quantities, such as angular momentum, actual energy of revolving bodies, and many others, which require the moment of inertia in their expression, but this is no reason for employing any one of them to furnish a definition; but, as it seems to me, a good reason for adhering to the present custom.

Prof. J. B. Johnson.—I am not in sympathy with the object of the author of this paper in trying to give to the expression "moment of inertia," as used in statics and for surfaces, a logical significance. This term originated as the name of a common mathematical expression in the laws of dynamics. When used in statics, it has an altogether different meaning, and a different term should therefore be used. Custom has prescribed, however, that the same term shall be used, and we must make the best of it. Thus, in the sense in which it is used in dynamics, any one of the five definitions given by the author of this paper would

Digitized by Google

seem to be satisfactory. Here the differential quantity is mass, and the summation is found for a series of products, one of which is an elementary mass or volume, and the other the square of its distance from the given axis.

When used in statics, however, we have neither volume nor mass under consideration, but simply an area, over which a uniformly varying stress is supposed to act. In this case the "moment of inertia" may be defined as *the moment of a uniformly varying stress about that axis at which this stress is zero.* Here the differential quantity is an area, and the summation is found for the products of these elementary areas into the squares of their distances from the given axis. It is quite evident that while this algebraic expression is of the same form as that for the moment of inertia in dynamics; yet since in one case the differential quantity is either volume or mass, and in the other case it is always area, it is evident that the sum of the products is a very different kind of quantity in statics from what it is in dynamics. The reason why the same term is used is because of the similarity of the algebraic form of expression. It is entirely illogical and unreasonable, therefore, to try to give to the term "moment of inertia," as used in statics as the moment of a uniformly varying stress, a meaning similar or analogous to that which it has in dynamics, where the term inertia has some real significance.

I think therefore that in teaching this subject the methods commonly employed in the text-books in dynamics are satisfactory, but that when this term comes to be used in statics, and in problems of stress over a surface, the student should be given to understand that the term is used here from a similarity of algebraic form simply, and that there is no analogy between the meaning of the expression "moment of inertia" as used in statics with that which it has when used in dynamics. When used in statics, therefore, the "moment of inertia" is simply a term or name which has been given to a certain algebraic form of expression, and can have no logical significance whatever. I believe all attempts to give to this expression a logical meaning, when used in statics, lead only to confusion, and that it should never be attempted. Let it be understood, once for all, that it has no meaning in the sense in which the word inertia is used elsewhere. If this is plainly stated, to begin with, then I do not see why any student should find it more difficult to call this algebraic expression by that name than he would in calling it by any

Digitized by Google

other arbitrary name, the etymology of which he may not know.

Prof. A. J. Du Bois.—I should first criticise the author's use of "velocity" where he should use "acceleration." Thus, page 480, middle: "*to impart unit velocity to*" should read "to impart unit acceleration to." I should further say "to impart unit acceleration to w pounds will require a force of w *units of force*, which is the same as the attraction of the earth for a mass of $\frac{w}{g}$ pounds."

Again: "mass in the dynamic sense is a measure of the pull or push, in pounds, required to impart unit velocity in one second" should read, "an *increase* of velocity of one unit *in one second*," *i. e.*, "to impart unit *acceleration*."

Again: "Further, to impart to this body a velocity of v feet per second would require a pull or push of mv pounds" should read, "a *change* of velocity of v feet per second *in a second*," *i. e.*, an *acceleration* of say f feet per second per second. In other words

$$\text{Force} = \text{mass} \times \text{acceleration}$$
$$F = mf,$$

and not $F = mv$, as you take it throughout. Momentum is a measure of force only when v is *numerically* equal to the acceleration. Velocity is feet per second. Acceleration is feet per second per second. The two are distinct, and should have different symbols.

(2) Inertia is a property of matter, like color or hardness, *viz.*, the property of inertness, that is, incapacity of self-motion. To speak of a "force of inertia," or a force of inertness, is as though you were to speak of a force of color or hardness. Force causes *change* of motion (acceleration). That which cannot cause change of motion is not a force. How can *inertness cause* anything? "Resisting force" is simply one side of the mutual action and reaction between two bodies. The significance of "moment of inertia" lies in the fact that Euler used "inertia" as synonymous with *force*. But we do not. Hence the term has no longer the significance intended.

Again, page 480:

$$Pr = mv \cdot r.$$

You cannot put $P = mv$. You can write $P = \frac{mv}{t}$ or $P = mf$. Force is not equal to mass × velocity, but mass × time rate of change of velocity, *i. e.*, acceleration.

Digitized by Google

All these remarks hold for angular velocity, ω, page 482. You cannot write

$$P = \int dm \cdot \omega x,$$

ω is radius per second and $x\omega$ is feet per second. You should write

$$P = \int dm \cdot \alpha x,$$

where α is angular *acceleration*, or radius per second per second.

(3) In mechanics I is always taken as Σmr^2.

It is a well-known principle that for rotation $I\alpha$ = moment of P or PJ, where α is angular acceleration (not ω). Hence, if J is lever arm of P, we have $I\alpha = PJ$. Now you write $I = PJ$, that is, you do not take $I = \Sigma mr^2$, but you take $I = \alpha\Sigma mr^2$, or, as you erroneously write it, ω instead of α. This is the same as $I = \Sigma Pr$, since $r\alpha = f$, and $mr\alpha = mf = P$. In other words, you implicitly assume for *your* I the old value of old $I \times \alpha$. That is, you express *in your definition* of *your* I, the old principle $I\alpha = PJ$, nothing more.

If I denote your moment of inertia by i, and old moment of inertia by I, then

$$i = I\alpha,$$

that is all I can see to your paper.

Now, what is gained? Your i can only be determined by first finding old I, and then multiply by α. When you do this you have PJ in *both cases*.

Of course, it is self-evident that when $\alpha = 1$ *radius per second per second*, your i will be *numerically* equal to old I. When α is not unity, your i is old $I\alpha$.

Mr. Gus C. Henning.—This paper is avowedly written to clear up any uncertainty about the correct definition and idea of the "moment of inertia."

As all the definitions given clearly state, the "idea of moment of inertia" relates purely to mass, and the distance from an axis to which this mass is referred, but in no case to the "force" or "resistance" with which this mass acts. Nor does the element of time come into consideration, and much less the "velocity per second" or per "unit of time." The "moment of inertia" is an abstraction relating to static mass, never to dynamic forces, and

Digitized by Google

the formulæ relating to the former cannot and must not be applied as relating to the latter. Now, instead of adhering to these definitions and considerations, the author forthwith drops these relations of the "moment of inertia" and mass and distance, and proceeds to discuss "inertia" (page 479), and deduces the formula for force which is necessary to resist it, taking the case of rotary motion, page 480; then, by obtaining the moment of this force about the centre of motion, obtains

$$f \cdot r = \tfrac{1}{2} m v^2,$$

and baptizes this new conception "moment of inertia." The first conception and the last are totally separate, and similarity of formulæ is accidental.

The idea of "moment of inertia" is the instantaneous effect which any mass would have if collected at a unit distance from an axis about which motion *would* take place *if* equilibrium were destroyed. The idea is not based on "the fact that ω and v are considered to be imparted or destroyed in one second," it is entirely independent of ω and v, motion or velocity, or of time (page 5).

According to this new conception of I, a body moving in a straight line would have an infinite "moment of inertia," because it would be

$$\tfrac{1}{2} M V^2 = m\omega r \tfrac{1}{2} \omega r = \tfrac{1}{2} m \omega^2 r^2,$$

in which r becomes ∞ or $= \tfrac{1}{2} m \omega^2 \infty^2$ or infinity, because a body moving in a straight line is moving about an axis whose distance is infinity, while we know that its work done is equal to $\tfrac{1}{2} m v^2$, and that it would require that resistance to bring the body to rest (overcome its inertia). It is unfortunate that the author should so radically confound the "momentum (if this term is permissible) of inertia," with the well-known term "moment of inertia." His proposition to call the "moment of inertia" "moment of resistance" will lead to further confusion, because this, commonly denoted by R, is quite a different conception, universally accepted. On page 481 the author refers to "the acting force, momentum, is equal to the resisting force, inertia."

In this, again, he forgets that "momentum" is not a force, any more than "inertia." It seems to me that when an attempt is made to elucidate a mathematical conception, nothing is of greater importance than to give a clear and concise perception of the terms involved, and use them accordingly; this the author

Digitized by Google

has most strikingly failed to do, and his discussion must leave philosophers and students more bewildered than ever.

*Prof. C. V. Kerr.**—The unanimity with which Professors Wood, Lanza, Du Bois, and Johnson object to the views proposed in this paper will be likely to discourage future effort in that direction. Still, if the discussion at present leads to clearer views, whether they be new or old, some good will be done. I feel constrained, however, to lessen somewhat the force of their remarks by calling attention to the fact that all of them are committed to certain views or conceptions, not only by long years of teaching, but by their published writings. It is not to be expected that new views will be readily adopted, even should they prove faultless. The intent of the paper is not so much a contribution to theoretical as to applied mechanics; and, as such, with the arguments for and against, it is submitted to the body of engineers.

The extension of the term, Σmr^2, has been carried in a recent work on graphical statics even farther than as stated by Professor Wood; so far, indeed, as to speak of the "moment of inertia of a force;" but the writer offers an explanation for so doing, very much in the nature of an apology. I agree with Professor Wood that the term Σmr^2 is not a force or a mass, neither is it in the *form* of a static moment. And since I have used both ω and v as velocity gained or lost per second, a common definition of acceleration, I can substitute ω for $\frac{d^2\theta}{dt^2}$, which represents angular acceleration, in his equation

$$F \cdot a = \Sigma mr^2 \cdot \frac{d^2\theta}{dt^2},$$

and substantially agree with him again. Since *mass* and *velocity* are independent variables, I have simply used ω as the integral of $\frac{d^2\theta}{dt^2}$. My differential element is a force of magnitudes, $dm \cdot \omega x$, at the end of an arm, x, and the integral is a force P at the end of the arm J; or it is equivalent to a force $PJ = I$ at unit distance. Hence, Professor Wood offers an illustration inconsistent with my theory, in the equation, $M \cdot I^2 = \Sigma mr^2$. So far as momentum is concerned, he has stated elsewhere that "the momentum impressed each instant is a measure of the moving force." Here

* Author's closure, under the Rules.

Digitized by Google

the only difference between us is that, for convenience, I have used the *second* as the unit instead of an *instant*.

Some of the master-minds in our profession may revel in abstract thought, and may be able to accept and use the "moment of inertia" as a purely mathematical expression; but I am led to believe that the majority of engineers, not to speak of beginners, whether engaged in the design of a machine or in the calculation of stresses in a truss, will proceed more safely and rapidly if they can employ the constructive imagination to guide them. And whenever we can give to the terms in mechanics a physical meaning we facilitate their use. I understand that Professor Lanza himself has publicly protested against the practice of the rule-of-thumb engineer who uses formulas that he cannot derive and does not understand. If Professor Lanza has done so, I hold him in still higher esteem.

Professor Johnson is entirely right in contending that the expression "moment of inertia" is out of place in statics, and that a different term should be used. That I would supply by "moment of resistance, R." But he has apparently overlooked that suggestion in my paper. He should replace "moment of inertia" by "moment of resistance," and then define it as "the moment of a uniformly varying stress about that axis at which this stress is zero." I would further point out the fact that, in developing the difference between these two moments, I have used for the one a differential quantity depending upon momentum, and for the other a quantity depending upon the load supported. Naturally, then, the integrals show that the moment of inertia, applicable to problems in dynamics, depends upon *mass* and *velocity*, while the moment of resistance, applicable to problems in statics, depends upon *stress*. I am therefore free from the charge of being "illogical and unreasonable" in trying to give to the "moment of inertia" as used in statics a meaning similar to what it has in dynamics. In his *Modern Framed Structures*, Professor Johnson offers as the "moment of resistance" of a rectangular beam the term, $\frac{1}{6}fbl^2$, which corresponds exactly to the value, $\frac{1}{6}sba^2$, found in my paper for the same type of beam. So I am inclined to think that if my object had been more fully understood he would have been more nearly in sympathy with me.

The objections offered by Professor Du Bois seem to rest mainly upon a matter of taste. He insists upon putting acceleration in a general form. I have not thought that necessary to the present

Digitized by Google

purpose, and have distinctly stated "that ω and v are considered to be imparted or destroyed in one second." In that sense they stand for a uniform acceleration. I desire to develop a simple and practical method of dealing with problems involving inertia, and not to exhibit all possible phases of motion. Let me illustrate: suppose a body of w pounds to be moving at a given instant in a given direction with a velocity of v feet per second. It matters not whether the body has been moving uniformly or with a positive or negative acceleration. If a force be required to stop it in one second from that particular instant, the magnitude is fixed by the product $\frac{w}{g} \cdot v = mv$. If Professor Du Bois will concede this point, the others will follow. Elsewhere he has made this statement: "The product mv, or the measure of the momentum of a body of mass m, moving with a velocity v, gives then the number of pounds constant pressure which will bring the body to rest *in one second.*" And further, "Momentum, then, is neither motion nor is it quantity of motion." In answer to his question, "How can inertness *cause* anything?" I am tempted to ask, what will happen if *inertness in motion* comes in contact with *inertness at rest?* Finally, in saying "Of course it is self-evident that when $\alpha = 1$ *radius per second per second* your i will be *numerically* equal to old I," Professor Du Bois virtually admits a point for which I have been contending, that angular velocity does have something to do with the moment of inertia. That is not conceded by all who have discussed this question. Elsewhere he has also derived the moment of inertia as follows, assuming a body to revolve about an axis: "Since, now, the velocity at any point is ωr, the inertia of that point is ωmr, where m is the mass of the point in question. The *moment* of this force of inertia will be, then, $\omega mr \times r = \omega mr^2$. If the angular velocity is unity, *i. e.*, if the point at one unit distance has one unit of velocity, then the moment of the inertia of the point will be simply mr^2. This product is called the 'moment of inertia' of the point whose mass is m and distance from the axis r. *The moment of inertia, then, is the product of the mass into the square of the distance from the axis.*" But when ω is dropped out our ways part. I insist not only upon using ω in the demonstration, but in retaining it in the solution of problems in dynamics to which the moment of inertia especially applies. Similarly, the factor of stress should be retained in applying the moment of resistance to problems in statics.

The test of usefulness of a method may be found in facility of

Digitized by Google

application and correctness of results. I would, therefore, point, first, to the experiment with the Corliss connecting-rod, as showing the ease with which the centre of percussion and the moment of inertia may be determined for an irregular body. The correctness of the value of J has been proved by finding experimentally the length of a simple pendulum that would vibrate in the same time as the connecting-rod. And, second, to the case of the fly-wheel as showing the application of the "moment of inertia" and the "moment of resistance," and especially the difference between them. It is thought, also, that the method will be of value in the solution of the shaft governor problem, and in the development of a science of graphical dynamics. In fact, some progress has already been made.

Digitized by Google

DCXXX.

PRESENT AND PROSPECTIVE DEVELOPMENT OF ELECTRIC TRAMWAYS.

BY C. J. FIELD, NEW YORK CITY.
(Member of the Society.)

IT seems hardly necessary to review the past development of electric tramways; it has been made apparent on every side of us, commencing, it may be said, with the introduction of electric motors on a large scale on the roads of Richmond, Va., about seven years ago, by the old Sprague Company. This was the first commercial undertaking of any size or capacity for the operating of a large service of horse railroad with electric motors, and the conditions and requirements under which this contract was taken were enough to discourage any but the most persistent and courageous. Grades of ten and twelve per cent., sharp curves, poor track to operate on, and no past experience to go by, were some of the difficulties encountered. This road developed the system in its main features as it stands to-day, two motors being mounted, independent of the car body, on the truck, and driving to the axle by gear. With the improvements and modifications which seven years have brought into the field, this system stands in the main what Mr. Sprague made it at that time.

The first motors installed on this road were seven and a half horse-power each. Later on these were changed to ten-horse-power, and a year or two later fifteen-horse-power motors became the standard. Then twenty, and now two twenty-five-horse-power motors are the standard street railway equipment which is generally made.

Street-railway managers were soon attracted by the results there shown, and the next large system to follow Richmond was Mr. Whitney's then new consolidated system in Boston, the West

* Presented at the New York meeting (December, 1894) of the American Society of Mechanical Engineers, and forming part of Volume XVI. of the *Transactions*.

Digitized by Google

End Railroad. There the Thomson-Houston Company practically had the field for enterprise and experiment, and carried on still further the development which had been started at Richmond, working out still larger problems than had there been undertaken. The result is to-day that, outside of a few cable roads, there is not a street railway system of any size in the country where electric traction has not been or is not being now introduced on an extended scale, requiring enormous additional outlay of capital in this installation. There had been before the commencement of electric traction a growing demand for more rapid transit in large cities, and this had to be met in some way. The cable had been introduced in a number of cases, but on account of its excessive cost, and special requirements and conditions to make it a success, in addition to the necessity of a heavy traffic in order to make it a commercial success, its introduction had been limited to a few large cities.

The advantage of electric traction was that it was equally available to the little cross-country horse line or the largest system in our large cities, and under the heaviest conditions of traffic and service. One of the first results of its introduction was the satisfying of the demand for more rapid transit, and the large increase in gross and net earnings, and the reduction of operating expenses, especially on the question of power. One of the early fields to be developed was the inter-urban service between cities, for connecting small towns with large cities. One of the first and most marked examples of this kind was the inter-urban service between Minneapolis and St. Paul. After its establishment it compelled six different steam roads to practically abandon the service they had been maintaining between these cities.

We have seen it in the last year or two carried still further at the World's Fair by its introduction on the Intramural road, and now being further extended on the elevated structures; and there are now being equipped one or two of the large steam roads for handling special problems, as, for instance, the Baltimore and Ohio tunnel at Baltimore, where the entire freight and passenger service of the road is to be handled by large electric locomotives of ten to twelve hundred horse-power capacity. The amount of capital and the confidence with which capitalists and investors have taken hold of the electric tramway has been something marvellous when we consider the short

Digitized by Google

time they have been in service, and though you might find a few failures owing to poor management, over-capitalization, or some other sufficient cause, in general we find an uninterrupted line of successful extensions and enterprises in this line. I will try to make a brief general review of the different parts of the electric tramway system, and show the development which has been made in each.

ROAD-BED.—There is probably no part of a street railway system which was more antiquated in its general construction than the majority of the road-beds were found in this country when cable and electric traction were first introduced, and it took some severe lessons in many cases to bring about appreciation of the necessity of good road-bed construction. The old horse-road construction was in somewhat the condition of the old steam-road construction fifty years ago, being a stringer construction, with ties four to five feet on centres in the majority of cases, and a flat rail, either centre or side bearing, and weighing from thirty to sixty pounds to the yard, spiked to the top of the stringers. The result naturally reached with the introduction of electric traction on such a track, with its heavy service and severe wear and tear owing to self-propulsion, was a failure of the road-bed entirely. On paved streets the ties had to be placed sufficiently low to enable the use of paving blocks over them. Therefore, with the commencement of the introduction of girder and T rails, which when first introduced were three to four inches, and in some cases five inches, in depth, it required the placing of these rails on a cast or wrought-iron chair or stringer in order to get the depth over ties for paving. This method proved very little better than the old flat rail, under the added requirements of the service, and especially at the joints; and contracting engineers and officials of street-railway companies very rapidly reached the appreciation of the necessity of using the heaviest possible rails obtainable, and the rail mills were pressed to undertake the rolling of heavier and deeper girder and T rail, and after overcoming all difficulties they have reached at present a state of development which gives us, we believe, a road-bed construction equal to that of any steam road in the country; and the standard to-day for electric tramway road-bed is seventy to eighty-pound T rail, or seventy to ninety-eight-pound girder rail, the depth of these rails running from seven to nine inches.

Digitized by Google

Ninety-pound rail, being nine to ten inches in depth, enables them to be spiked direct to the ties and give the necessary depth for paving. This heavy rail, with eight to twelve-bolt joint plates, supplies every requirement. The girder rail is being generally used in paved streets, and T rail on suburban roads, and, for the last year or two, to a considerable extent on macadamized roads, and even in a few cases on paved streets. By the introduction of special details of construction, and especially on macadamized and asphalted streets, the T rail seems to offer as good a road-bed, both for the railroad and the public, as the side-bearing girder rail. Ties used should be standard railroad ties.

The special work on track work, such as cross-overs, turnouts, curves, etc., has also met with large improvement. The old form of special work was iron castings, which very rapidly depreciated under the conditions of this service. Next we had introduced the rails cut into the special shape as required by conditions and bolted together. These also very rapidly depreciated, and became loose in the joints, etc. Now we have as a standard for this special work the steel rails bent to the form required, and surrounded by a mass of cast metal to hold them together, and one company is turning out this special work with the parts welded together; also in cast steel. One company is introducing track work in which, instead of joining up the rails with channel and joint plates bolted together, the rail is being welded electrically into a continuous rail. A section of track in Cambridge, Boston, and also one at Johnstown were laid in this manner, and this year this plan is being introduced on a very large scale on the entire system of a road in Brooklyn, N. Y., where fifty miles or more of ninety-pound rail is being laid in this manner. The experiment is a bold one and deserves success. We have got to await a severe winter to see what success will be achieved by it. The process of welding this up is to weld two joints and skip the third, and come back at night, when everything is cool, and weld this third joint. By this process they expect to overcome the difficulties which they encountered last year, in which, after one winter's test, six per cent. of the joints pulled apart.

Track Bonding and Electrolysis.—We are hearing a great deal to-day about electrolysis and electrolytic action of the current on the return side of the tramway circuit. In the early introduction of electric tramways, and with the light section of

Digitized by Google

rails, the usual method was to bond up the rails and connect them with the return copper or iron wire of varying sizes which was laid between the rails. At first the size was No. 4 and 6 wire, and later on 0 and 00 was used. With the introduction of a seventy and ninety-pound section of rail we have met the question of sufficient capacity in the conductivity of the rail. The present requirements are to bond the rail in such a manner as to insure a continuous connection of all the tracks, and thus provide means for the return connection to the power station, and we believe it may be said that the best standard of construction to-day is to double bond all the joints of the rail with the shortest possible bond which is practicable, and cross bond each rail every few lengths and also cross bond to the other track. This insures a uniformity of potential in the rails. Then, by connecting this track by overhead feeders run in the same manner as the feeders to the trolley, connected every half mile or so to the track, we believe we have a practical solution of the difficulties which have been encountered in the proper return of the current, and a prevention of the trouble which has been encountered where this return was not sufficiently provided for, and the current, taking to the water and gas mains, has caused the trouble and damage resulting from the same.

Line Construction.—When we run across some of the old cases of line construction, as at Richmond and other places, and then compare them with the present form of construction which is now being introduced, it gives us a better illustration than words can describe of the improvement which has been made in overcoming the objections which existed in the earlier work. Then we had for insulation old pieces of glass and porcelain and little blocks of wood, the whole making a poor mechanical and electrical job, and giving considerable trouble.

The standard of trolley wire then was No. 4. Now the standard is a No. 0 or 00 wire. Then the poles used were plain little telegraph poles, about six inches at the top and eight inches at the butt, which quickly gave way under the strain of service. Now we have a well-built line, substantial in every respect. The poles used are either a heavy octagonal sawed pole, or various types of iron poles. Local city authorities, though, have compelled the use of iron poles in most cases, and various types of pipe and trussed sectional iron poles have been introduced. The difficulty with the iron pole construction is to get good in-

Digitized by Google

sulation between the trolley wire and the ground. The general line material, such as trolley insulators, feeder insulators, pole insulation, etc., have all been brought to a high state of development, and at present we can purchase this material and know pretty well that we are getting first-class insulating qualities. On all city work the general form of suspension for the line is cross suspension, with the poles located on the curb.

FEEDER WIRE.—Feeder wires have been more and more liberally introduced and used, and at present, on the best construction, the system is laid out and figured to maintain a distribution of potential over the entire system with a drop of not exceeding five to eight per cent. under the most severe conditions or heavy stress of weather. Feeder wires in general have been run overhead, but we believe it is an assurance of better service on large roads to run the main feeder trunk lines in underground conduits, and we have done this in several cities with successful results. With proper arrangement of feeders, cut-outs, section insulators, etc., and proper distribution of the feeder lines on the switchboard, we have complete control of our system, and, in case of trouble, are able to localize that trouble to the smallest possible section of the line, and provide a quick remedy therefor.

UNDERGROUND CONDUITS.—Underground conduits, or the placing of the trolley wire with all its feeders under the surface of the street, is the ultimate and desirable result to be obtained in our large city lines of electric traction, and cities are going to demand in the near future this method of service where the local conditions and requirements will warrant it. Underground conduits were attempted four or five years ago, but on account of insufficient experience, lack of engineering ability, or amount of money expended on the work, as well as a desire on the part of the company installing them to make them a failure, they were not in general successful. The first really successful underground conduit to be installed and operated was in Buda-Pesth, about seven or eight miles in length, and it is now being extended to thirty miles or more. The local conditions there were favorable, and the width of slot opening which was possible to be used there was not practicable in this country, owing to our wagon tires. We have had, the past year, one or two conduits introduced on similar lines in this country on a very small scale, at Chicago and Washington, and we will have within the

Digitized by Google

next few months the introduction of a conduit, in one or two of our large cities, on a large commercial scale. The conduit to be most used will be one similar to a cable conduit, with the trolley conductors placed at the sides in the shape of a channel or angle-bar or rod of iron or copper, which will be divided into sections, and fed by underground feeders laid along the line of the road. Various types of shoes or brushes will convey the current from the trolley wire to the motors on the car. Such a conduit, we believe, will only be successful where it is made a double-trolley conduit, and not depending on the track for the return circuit.

The other type of conduit which may be used is one of the several which are operated on the closed-conduit plan. None of these have been introduced on a commercial scale as yet. It is a very attractive method in many ways, also saving on the cost of construction of a cable conduit. There are numerous difficulties in regard to the electrical details which will have to be overcome before such a form of duct can be a success. The overhead-line construction, though, will continue to be used in the majority of cases for many years to come, we believe, as the most practicable and best method for conveying the current to the motors. The cost of a well-built trolley conduit in the form of a cable duct will, in most cases, exceed that of a cable duct on straight track, but less on curves and special work.

Cars and Their Equipments.—In the old horse-car service the standard length of car body was fourteen to sixteen feet, and in open cars seven or eight benches. The added service done by the large electric roads brought about an increase in the length of cars, particularly in the closed cars. This was carried to an extreme, by increasing the length of the cars to twenty-six and twenty-eight-foot body, with double truck. We have had a reaction from that length, and we believe the best standard of car for heavy city traffic, and the one which will give the least wear and tear on the road-bed, and also will enable the use of higher speed on suburban lines, is a car body from twenty to twenty-four feet in length—twenty-one or twenty-two feet being the most desirable standard—and mounted on double trucks, with maximum traction on the driving wheels. Such a car body, with wide platforms—four to four and a half feet—with entrances on one side, with wide double doors, fills best, we believe, the general requirements of such a service. There is a strong

Digitized by Google

objection to the use of nineteen or twenty-foot car bodies on a single truck, with a six-and-a-half to seven-foot wheel base, as has been done in a number of cases. There can be only one result from such an equipment, and that is a rapid destruction of the car body, and also the track. This pounding or destruction of the track on these single trucks has to a considerable extent been due to the weight of the cast-iron motors and their rigid mounting on the car axle. This difficulty has been greatly lessened by the introduction of steel motors of about half the weight, and the supporting of them by springs.

Open cars may be treated in a similar manner. Generally these open cars are used on a single truck; but if of excessive length, a double truck should be used. The trucks generally used we have partially treated of in describing the car bodies. To a car body seventeen or eighteen feet in length, a four-wheel truck with a wheel base six and a half to seven feet, increased as much as the curves which exist on the line will permit, is the standard where that length of car body is used. The general diameter of the wheels now used is about thirty-three inches, and we have many forms of heavy-built forged frames or steel pressed frames, with every possible arrangement of the spring base which can be devised to overcome the natural tendency of the car body to teetering when partly filled with an unequally distributed load of passengers.

Motor Equipments.—The improvement in motors during the past seven years, since their first introduction, has been marvellous. The old seven-and-a-half or ten horse-power motor was a thing of pity, poor in its design both mechanically and electrically, and a continual worry and trouble to keep it in operation and service, the fields and armatures burning out every day, and the repair account on them running from three to six cents per car mile operated. Now if we turn to the present type of iron-clad slotted armatures and water-proof motors, with normal horse-power capacity, in the general type of motors of twenty-five horse-power, making equipment per car fifty horse-power, and built for any speed which is practicable on the service for which they are to be used, with a depreciation, wear, and tear less than almost any other type of power machinery, we have, it seems, attained a commercial stage and development in this motor which it will be hard to excel. These motors are now equal to almost anything to which they may be put. Their capacity,

Digitized by Google

economy, and power are brought to a high stage of development, and their economical controlling and handling is managed by a controller stand which gives various combinations and arrangements of the motor fields and armature, which gives us complete control over the current under different conditions of service, and gives us an economy in current consumption which is away beyond the expectations of a few years ago.

POWER HOUSE.—From the mechanical engineer's standpoint, probably the most interesting part of the equipment of the electric tramway is the power house, and therefore we will try to give you a more careful and detailed description of its present development and arrangement. The one central idea of electrical engineers, in the early electric light and power station work, was to have them located in the centre of the system, regardless of all other local conditions and requirements. Experience has shown us, in the broad treatment from an electrical and mechanical engineer's standpoint, that we want to take into careful consideration not only the electrical requirements as to the distribution of power, but also the possibilities of economical generation of that power from a steam-engineering standpoint; therefore we give careful consideration at present to this matter. The general requirements are that a power station of any size or capacity should be so located as to generate, under the most economical conditions, the power which is to be used in the utilization of electricity, and the location to be such that the obtaining and handling of coal and water shall be at the lowest obtainable net cost. The capacity of the station should take into consideration the present requirements and immediate future expectations as far as can be foreseen, and as far as the resources of the company will permit on a commercial scale, and without depending too much on future prosperity.

The general basis of calculation of the horse-power required for a tramway system must take into consideration the local conditions of service, grades, curves, etc., but, in general, fifteen to twenty-five horse-power per car equipment in use on the road is the general limit of a well-designed station, which will take into consideration the conditions for the continuous service and operation of the plant. A road of one hundred cars would therefore require about two thousand horse-power, which horse-power should be divided into, say, four units of five hundred horse-power each. The number of units in any station should be the

Digitized by Google

fewest number which will give a safe and economical division of the units, and in a station of this kind four or five units, according to the service and conditions, should be the standard. In the past we have had to be guided largely by the capacity and size of generators it was possible to obtain, but this question is now eliminated, and any capacity of generator which the engineer may call for and feel necessary to meet the needs of his case, can be contracted for and built with a surety of success. Generators are now being built in this country up to five thousand horse-power each. The general arrangement and character of power-station building required for the power plant is a well-designed one-story fire-proof iron, brick, and stone structure, with trussed roof, travelling power crane in the engine room, and convenient for the handling of coal, ashes, etc., which it may be possible to obtain. The method of connecting up the engine and generators in the early types of small generators was to belt them to small automatic engines, or else by countershafting. Both methods have their advantages and disadvantages. At present the tendency is large generators directly connected to the engine, whether automatic or Corliss, high, slow, or intermediate speed, such connection being made either by direct belting or directly mounting the generator on the engine shaft. The type of engine to be used on this service we have found must be equal in its requirements to that of rolling-mill service, capable of standing the heaviest strains in the variation of the load, and also to give desirable closeness in regulation under these heavy changes, in order that our generators may be balanced with one another. There is probably no service which has done more to develop the steam engine in the last few years than railway and power service. The Corliss engine is being better and more heavily built, and being made to regulate more closely than it did in the past. The automatic or high-speed engine has been developed from a light, unmechanical single-valve engine to a heavy, substantially built double-valve engine giving good regulation and good service up to certain sizes; and for our larger units, we believe the alternate type will be an engine combining the advantages and uses of an automatic and Corliss engine, combining the advantages of both, and trying to avoid the disadvantages. Such an engine for general requirements we believe will preferably be a vertical, as giving better economy of space in large plants. As to the number of cylinders to be used in engines, it is generally

Digitized by Google

acknowledged to-day that compound engines give the best results on railway work. Triple-expansion, on account of the wide variation of load, have been found to be undesirable, and therefore cross or tandem condensing or non-condensing—preferably the former—are the standard to-day.

In boilers we have a wide range in style, size, and capacity. The plain old horizontal return tubular, sixteen or seventeen feet long, with three-and-a-half or four-inch tubes, is still filling general requirements in a large number of cases in a satisfactory manner, where real estate has not to be purchased at an excessive cost, and where the steam pressure does not exceed one hundred and twenty-five pounds. Such a boiler, made with good material, with a butt strap joint, gives us good service. Where the conditions are such that we require water-tube or sectional boilers, we have a large variety to select from, many of them meeting our requirements and giving good service; but a number of them we find are giving a good deal of trouble and bother in their care and maintenance, and also in not giving good dry steam.

The generators, as we have indicated, have been developed from small units to any size of machine desired, and we have now a machine which in its economy, durability, regulation, etc., cannot be excelled. A well-built machine, with slotted armature, large commutator, carbon brushes, slow speed, and self-oiling bearings, requires a minimum of attendance for its good working. These are built for direct belting for a slow speed, or direct connection for the various types of engines operating from seventy-five to one hundred and fifty revolutions, according to the size of the units or type of engine to which it is to be connected, and they are being built from one hundred to fifteen hundred kilowatts capacity.

Car House.—A well-built and well-designed car house is of as much importance to such a system as its power house. Such a car house should be built to obtain minimum handling of cars and afford good facilities for the care and repair of the cars in regular service; and also to give a storage capacity for the cars which are not in regular service. Such a car house should be a fire-proof structure in every respect, and afford ready access and egress for the cars. The general form of the structure, whether one- or two-story, must be in accordance with the general conditions and requirements of each case, and be

Digitized by Google

equipped with repair shops and repair pits, as well as paint shop, etc.

OPERATING EXPENSES AND COST OF EQUIPMENT.—The old horse-car road in large cities operated at a total cost of from eighteen to twenty-five cents per car mile. One car mile is taken as the standard for operating expenses in our tramway service. The heaviest item in this operating expense was the question of power—that is, the care and maintenance of the horses, their feeding, and the depreciation of the same. The average life of a horse on a well-operated tramway road is five to six years, and the number of horses required per car from eight to eleven, according to conditions and requirements. The cost of this power service was from eight to eleven cents per car mile. This is where the electric road has made its heaviest gains in the reduction of operating expenses. This item is reduced in power service to-day to a cost, under general conditions, ranging from one to one and a half cents per car mile. Is not this a marvellous gain in a few years, and does it not indicate and show the possibilities of the introduction of this power on this service? The relative proportion of operating expenses to earnings in the horse-railway service was from seventy to eighty per cent. operating expenses to gross earnings. In electric service we have a considerable increase in our gross earnings over our old horse line, which increase runs from twenty-five to fifty and even one hundred per cent. in some cases, and the operating expenses being forty to sixty per cent. of the gross earnings. In this operating expense we include all the operating expenses of the road other than the fixed charges.

The cost of building and equipping an electric road is considerable. The last year or two has reduced this item to a considerable extent, especially on the electrical equipment; and has not only reduced the cost, but shows a great deal better equipment, and one which is going to show a much smaller depreciation than we had a few years ago. The standard price four years ago for an equipment of two fifteen-horse-power motors and the installation of them was $3,000 to $3,500. The price to-day for two twenty-five-horse-power motors, which are much superior to the former ones, is under $1,000. This gives us a total cost of a motor car, including car body, truck, motors, etc., of approximately $2,200. A single mile of road-bed construction, with ninety-pound girder rail, exclusive of any new

Digitized by Google

pavement, but including taking up of the old track and replacing of old pavement, about $7,500 per mile of single track. This makes no allowance for special work. Overhead-line construction for one mile of double track, with iron poles, feeders, etc., $4,000 to $5,000 per mile; with wooden poles, about $3,000 or $4,000 per mile. Steam and electric plant for direct-connected vertical compound condensing plant—for steam plant, $50 to $55 per horse-power, and the electrical, $20 to $25 per horse-power, making a total for steam and electric plant, $70 to $80 per horse-power. As a general summary, we have for the total cost of the equipment of the electric tram-road—that is, the rebuilding of an old horse road—including power plant complete, buildings, car house, cars, equipment, track and overhead construction, $20,000 to $25,000 per mile of single track, according to the varying conditions and requirements of different cases.

CONCLUSION.—Without going to extremes, I believe we may safely say that the electric tramways have more than met all the requirements, expectations, and agreements of even the most enthusiastic advocate during their early introduction, and when we look around us to-day, and see the universal introduction which they have met with in this country, and are now meeting with in all parts of the world, we can in a measure appreciate what has been done in this matter.

As to the future and the future possibilities of the tramway, not only for city and suburban traffic, but also to enter into competition for a large share of the steam railway service, it will see the introduction of electricity for many purposes and uses in this field. The limit of speed and power obtainable is only limited by the conditions and local requirements of this service. Theoretically, any speed is possible which is desirable to be obtained on any service, and the only limits are the resistance of the wind or air. As to the exact line which this development is going to take, it is hard to determine; but we believe for a number of years to come it will be a continuance of the present lines, with improvements in the general detail of construction.

The storage battery we have left out of consideration entirely, and we do not believe it is in a state that it needs to be considered commercially as yet.

Up to the present time in this service, our development has been with direct or continuous current. There is no question

Digitized by Google

but that, with the large improvements and modifications which are being made in alternating current apparatus, we may expect its introduction on the tramway service, especially for long-distance work.

In all this work the mechanical engineer has played and will play an important part, and the combined mechanical and electrical engineer is going to be and has been largely identified with the development of this line of work.

DISCUSSION.

Mr. Gus C. Henning.—This paper deals with the art of running cars by electricity as it is at present, which is not at all the best or cheapest way. Everybody knows that the overhead trolley is expensive in bad weather, and in certain conditions cannot be operated at all. Many engineers have been trying to get a method by which the difficulty of flooding an underground conduit or filling it up with dirt can be avoided, and also a low first cost of construction be secured. Siemens & Halske, in Hamburg, have recently taken up a new system. They are going to build a road which will be found described in the *Elektrotechnischer Anzeiger* of November 4, 1894, and although they have been very successful with their Buda-Pesth road, everybody knows that the dirt, ice, and water getting into the slot will gradually block the road, or at times break the circuit at many points so that it becomes inoperative. In the new method of Siemens & Halske, instead of having an open slot, they simply make a conduit, *C*, of a diving-bell shape (Figs. 156, 157), and then, at certain distances, according to the grade of the road, they put in dividing walls, *D*—diaphragms, or bulkheads. That makes a water-tight compartment of each section of the conductor conduit. Those can be as short or as long as you please. On a level road you do not require them except for long distances. No matter how much the slot fills up with water, the trolley wire being at *E*, it will never come in contact with water, as the enclosed air will prevent the water from rising. The trolley, *T*, however, simply passes below that wire at these diaphragms by means of inclines, *I*, under the wire, which can be long or short, according to the speed of the car or any other condition. But a brush, *B*, follows along, which sweeps out that conduit. The conduit tried by Siemens & Halske at Hamburg is only eight

Digitized by Google

inches deep. They have actually flooded their street with water several inches, and the trolley runs underneath, in contact with the wire which is bare, without any objection whatever. There

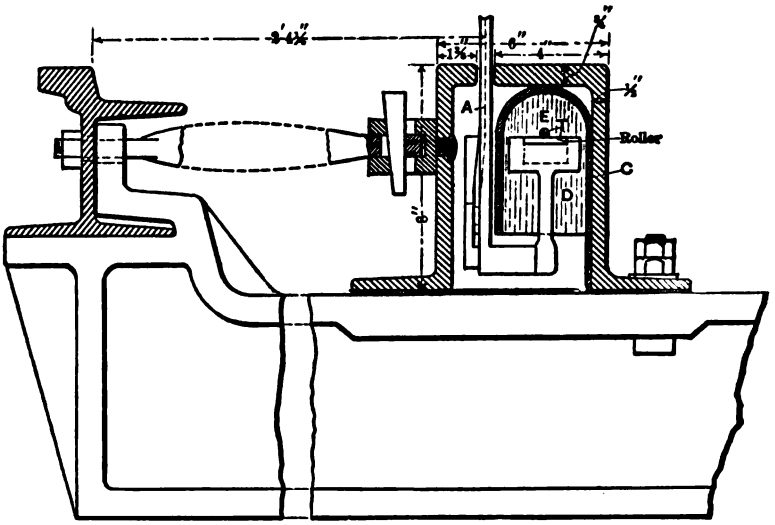

FIG. 156

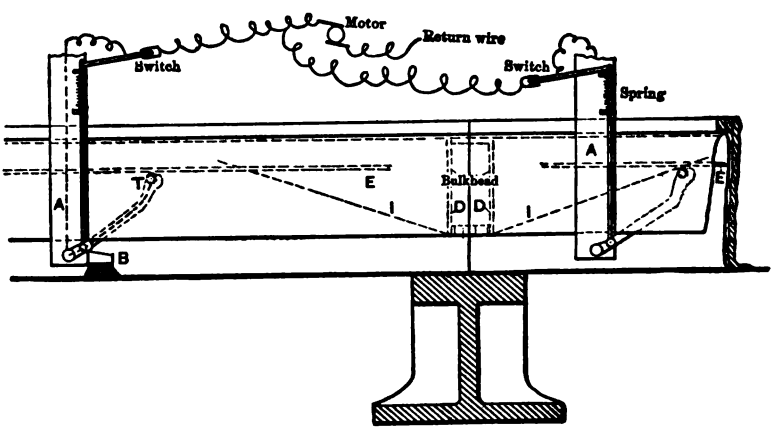

FIG. 157.

is no loss of current, because, where the wire passes through these diaphragms, it is very carefully insulated, and in between, at intervals, they put what is the same as an expansion joint, that is, they coil the wire, so that no undue strains can come on the wire on account of expansion or contraction. Siemens &

Digitized by Google

Halske say that this method costs no more than the overhead trolley, and probably less, because, as you see, this is a cheaply made box. At the same time, these conduits can be laid over the ties. Of course, in heavy traffic you have to get a good road-bed for your ties and heavy rails. But they have got to that point now. In view of that, the statement about economy, given in this paper, will be found to be very much reduced just as soon as this system has been introduced on a large scale here and elsewhere. Even outside the cities this would be a far preferable method of running an electric road, for the reason that it is entirely independent of storms. The only things which will affect this system are electric storms, which, of course, derange any system. But Siemens & Halske have demonstrated by actual operation in Hamburg that this is a perfectly practicable and reliable method of operating an electric road in a very much more economical manner than even the overhead trolley, and the construction of the Metropolitan Traction Company in this city will be avoided, in which they have to dig down several feet in order to put a conduit, in which they will also put a cable, in case the electric trolley will not run underground. It is generally asserted that the Metropolitan Traction Company has not attempted anything like this, because they want to bring in the trolley from across the river, and therefore try to show that they cannot run a conduit trolley in this city. But here is a system which has been entirely successful, very economical, and less liable to leakage or loss than any other system, and I think, in the discussion of this paper, which only gives us the practice to-day without regard to the latest, we should also put it in the discussion.

The slot is of any shape. It can be either between the rails, close to them, or at the centre. It may be placed outside the rail, or else it may be placed under the heads and between two parallel rails. The sketch shows two Z-bars, and the conduit hangs under the heads. The stay-bolts are placed as usual, and hold the conduit on the ties, or, better still, on the plate resting on the ties, making this a solid slot. Then the water will enter the slot and fill up the open part of the conduit. If the whole eight inches are submerged, with a foot of water overhead, the compression of the air in the chamber in the conduit will only be an inch and a half by actual test. The trolley, of course, hangs on an arm and runs against the wire. Now the trolley will

Digitized by Google

run from one of these sections to another very rapidly, and suck a lot of air into the water as it plunges down, and carry that air into the next chamber, and, therefore, in running there will be a constant conduction of air from one chamber to another. Otherwise the trolley, running very rapidly and splashing the water, might absorb a lot of air, which would be carried out and the conduit gradually fill with water. But that has not been found to be the case, because when the trolley leaves a section where there are no diaphragms the air will follow the trolley, so that the chambers will always remain filled with air. They will never become filled with water.

Mr. Oberlin Smith.—Is the circuit broken on these inclines, or are they connected with the live wire?

Mr. Henning.—They are insulated from the wire. *II* is the guide, and *E* is the wire. The guides are entirely insulated, and the wires are insulated through *DD*. If the ends of sections at *D* move, no strain will be brought on the wire at all, because the wires are fastened at *D* and *D*, and coiled between these diaphragms; hence the ends will move forward and back irrespective of the temperature changes. If there is a grade of six per cent., knowing that water rises an inch and a half in the conduit under a head of twelve-inch submersion, calculation shows that section diaphragms must be placed about twenty-four feet apart on such grades, which are about a maximum, except in extraordinary cases.

Mr. Partridge.—What is the depth of that box containing the wire?

Mr. Henning.—I think that is only five inches. All you require is an inch and a half below the wire.

Mr. Smith.—About how long do they make the sections of air lock for a level grade?

Mr. Henning.—They do not have any at all. On very steep grades the compression of air will not be great, because the water naturally flows off. Feed wires are used at intervals for the current. Dirt holes are provided at intervals, with manhole covers, to receive the dirt which enters through the slot. As each trolley arm can carry a brush, the conduit can be kept clean. On lower Broadway there might have to be a receptacle about every one hundred and fifty feet, on account of the mass of dirt. On the east side, in the dirty streets, there may have to be more; while on Columbus Avenue, or similar clean streets,

Digitized by Google

dirt receptacles several hundred feet apart would suffice. Siemens & Halske are building a road on that plan, because it has been practically demonstrated that it is cheaper, more economical, and entirely more mechanical than the overhead trolley system. The trolley arm, of course, swings on a hinge.

A Member.—How about the spark when the trolley leaves the wire?

Mr. Henning.—The fact is, there is a double trolley. There is a constant contact of the trolley mechanism with the wire. But one trolley as it follows a guide is not in contact with the wire or the other trolley. But one or the other is in contact all the time. Now, when one trolley comes to a guide, the other trolley has already come into contact with the wire beyond, so there is always a constant electrical connection, and there cannot be any sparking.

A Member.—How do you manage when another road is crossing at right angles?

Mr. Henning.—The car will run twenty feet or more by momentum, if necessary. On the cable road they carry a car from one side of Third Avenue to the other, at 125th Street, after dropping the cable. There can, for instance, be an open place on one side of the street, and the trolley can be raised up under the car. Then, when they cross the street, it can be dropped again. If you want to change from this system to any other you simply pull your trolleys up at the end of the section and go ahead. Of course, at crossing points, the wires could be dropped below the conduits just the same as is done nowadays with cables, and connecting the chambers, or stop them off at the intersection, and simply drop the wire. There is no difficulty whatever, and it does not require heavy structures at intersection points, as cable roads do.

A Member.—How do they manage to keep that trolley in connection with the wire in case it is flooded?

Mr. Henning.—If you take a tumbler and try to put it into water upside down you cannot get any water into the tumbler, because the air stops it. The trolley runs above the water, and it cannot jump out of position. It is not like the overhead trolley. A perfectly flat roller can be used as a trolley, and it cannot get out of the way, because the whole mechanism is guided by the flat sides of the conduit. If the car moves two inches laterally, the whole motion of the trolley is less than one

Digitized by Google

quarter of that, or less than half an inch motion. A little guide roller can be used, and then the trolley cannot move at all, but that is not necessary.

Mr. Oberlin Smith.—How near is the wire to the top of the diving-bell connection, and what kind of insulators are attached to it?

Mr. Henning.—You can use ten thousand different kinds. You can pack that solid against non-conducting material. I do not know what they have done in Hamburg, but I know there is one device which is proposed, which is simply to carry the wire by soldered strips in a lot of insulating material which is put on the conduit in the shop. This whole thing can be made in the shop, except that you make the electric connection between the ends of the wires in the street. The entire conduit is made in the shops, and simply laid down, the same as any street rail. A ten-inch slot rail is not necessary, as is the case on the cable road, because the conduit is only eight inches deep. It can be made very stiff, very cheaply, and the pavement will come up against it and make a perfect joint.

Mr. Hale.—How do you avoid a short circuit when one trolley is in the water, and the other on the wire?

Mr. Henning.—It is so arranged that one of these trolleys is cut out when the other comes down. It is only a matter of detail.

A Member.—What voltage do they advocate in them?

Mr. Henning.—I do not know what they have used, but the voltage is not a question in this at all.

Mr. Nelson W. Perry.—It would be a very serious question, it seems to me, on account of the creepage. The dampness of the air would cause a creeping of the current over the insulating material. Here you have a very short distance between your copper conductor and the inverted trough, and the only way to obviate an excessive creepage of current would be to use a very low potential, and that means an excessive amount of copper in your conductors, or a very large loss in transmission. At two hundred and fifty volts you could not carry it half the distance that you could at five hundred volts.

Mr. Henning.—I know that the voltage carried by Siemens & Halske is low. What it is I cannot tell you. But under the voltage necessary to operate successfully they say there is no appreciable loss. We will have to wait for tests and accurate measurements of the matter in order to get at it. But it is not

Digitized by Google

necessary to carry a high voltage, because there is not so much loss to be provided for along the line. You can operate with a minimum voltage, because there are neither interruptions in the circuit nor leakage. If the inside of the conduit is prepared there will be no precipitation, as it is always at the temperature of the external air, as it is so shallow. In this respect it is quite different from large or deep conduits.

Mr. Perry.—If you had no leakage at all it would be necessary to have a large amount of copper, if you were to carry it a long distance.

Mr. Henning.—There is no difficulty about putting in any size of conductor. You can put a rod of copper in there instead of a wire. You cannot carry a trolley wire of very great section overhead, because your posts come too close together. Here you put them in the shop and your only point of connection is at the ends, and an outside feed wire, well insulated, carries the main current, and another the return.

Mr. Perry.—Then comes in the question of copper. If you don't have sufficient copper, you will have so much drop in your line in distance that your cars will be inoperative.

Mr. Henning.—That is very true. But the total cost of this is so low that you can afford to put in a large amount of copper.

Mr. Perry.—With five hundred volts on our overhead system, where we might say that the leakage is practically nothing, the limit to which we can transmit current economically is, I think, about seven miles. Now, if we are going to carry the current further than seven miles, it becomes more economical to build another station, with all that that involves, rather than put in sufficient copper to overcome that drop. If you put the voltage at two hundred and fifty to avoid that leakage, the limit to which you will distribute your current will be half, the distance will be only half as great; or, if you put in enough copper, your investment in copper is twice as large. So you have to decide between Scylla and Charybdis.

Mr. Henning.—Of course, those are propositions or suppositions which have to be proved or disproved by actual practice. But I do not think you can apply the knowledge gained by overhead trolleys to this conduit. I remember hearing one of our members reading a paper showing that an electric locomotive was impracticable, for the reason that it would be so massive that we could not do anything with it. Now we have electric

Digitized by Google

locomotives in many places. Siemens & Halske say that this is the best thing they have ever seen, and I think their judgment is better than mine.

Mr. Oberlin Smith.—It seems to me, at the first glance, and after having tried to pick holes in this scheme, that possibly it may be a pretty good thing. Probably it will strike a number of us here, Why didn't we think of that ourselves? That idea of the air chamber looks good. Of course, we do not know what the troubles may be. The mechanical part seems to be well arranged. The question was brought up just now about the leakage of current by creeping over the damp surfaces from the wire on to the walls of the inverted trough, etc. Probably that is the chief trouble to contend with. How great that is or will be, of course we cannot tell. It seems to me that here is where the pith of the whole experiment lies. The matter of not being able to run over so many miles need not come in, because we can run feeder wires, as usual. Thus it might not be necessary to put such a tremendous big conductor in there, after all.

Mr. Partridge.—For some time I lived near the line of the Tenth Avenue cable road, and I watched the conditions under which that conduit was flooded very carefully. It was a surprising thing to me that the number of days in the year on which water found its way into the slot was very small. I think there were some years in which there were not more than ten days when water ran into any part of the slot from 145th Street to 190th Street. When we consider the fact that frequent runs and good drainage bring up the ventilation to a pretty high degree, perhaps we shall find that the condition of the air in the conduit is not as bad as we have heretofore supposed it to be.

Mr. Perry.—It is not a question of the amount of copper which you carry in the trolley wire, because you can make your feeding intervals as short as you choose. You can make your trolley wire as small as you choose, for that matter, but the question is, how are we going to get our current to feed into it at a distance of so many miles? It is not a question of opinion what the drop will be. It is an electric law that the drop on a line is equal to the current which that line carries, multiplied by the resistance; CR is equal to the drop in potential. If you use a large copper wire you will decrease that drop. With a given wire, if you use twice as much current at a given distance your drop will be

Digitized by Google

twice as large, and the question comes in whether the interest on the investment of the increased amount of copper to decrease that drop will amount to more than the benefit gained. Sir William Thomson's law is that the conductor of most economical size for carrying currents is that on which the interest on the investment is equal to the cost of horse-power lost in transmission; this law is subject to some minor modifications, but as a general truth is accepted by all electrical engineers everywhere. Now if, on the other hand, we save copper by increasing our potential, as we try to do, and as they do in the alternating current, and then reducing down to low potential for use, we run the risk of losing a larger amount through leakage. The higher the potential the greater the leakage across the insulating surface. If your insulating surfaces are perfectly dry and the conditions are very favorable, the leakage will be very small comparatively with a given potential. But if, as is apt to be the case in a conduit, our atmosphere is damp, the best insulating materials which we know of will carry current along their surfaces by creepage. The only way in which we can increase the insulation along the insulating surfaces is by increasing the length of the surfaces. In our conduits that distance is limited by the size of the conduit, and in this particular conduit it seems to be very limited. In the overhead structure our wires are twenty-two feet, we will say, above the roadbed. There is a wire, which may be of insulating material, carried to the poles, and the creepage has to go over that wire and then down to the ground in order to make any leakage at all. The great difficulty with our conduit systems is that that distance over which that creepage has to go is necessarily very short. Another difficulty is that the atmosphere under the ground is apt to be very much damper than it is above the ground, and the usual way suggested for overcoming surface leakage due to dampness is to reduce our potential. If we do that, we have the other difficulty of being compelled to use so much copper.

Mr. Fred. A. Schæffler.—Mr. Henning made a statement which I would not like to see go on the records of the Society without asking him a question about it. I would like to have Mr. Henning point out one place in the United States or anywhere else where they are operating steam railroads by electricity or trolley wires or other connections of the same kind, where the locomotive is not generating its own electricity, or where it is

Digitized by Google

not underground in mining use, or in a tunnel similar to the Baltimore and Ohio tunnel, which is about to be operated by electricity. Those and coal mines are the only places in which I know electricity is actually used in hauling by locomotives.

The Chairman.—I suppose Mr. Henning referred to the trolley cars.

Mr. Scheffler.—Those are not locomotives.

Mr. Henning.—I was speaking of operating a railway line doing a considerable business by electricity. We have the Southwark Division of the District Railway in London. We have the new engine constructed for the Baltimore and Ohio. Of course, I am not speaking of running a steam road or a trunk-line by electricity. That was not my point. I am speaking of a railroad operated by electric locomotives.

Mr. Scheffler.—I wish to state that the discussion which you referred to happened to strike me, as I was the originator of it, I believe, at Cincinnati, and I think the remarks and the statements that I made at the time, figures and costs, etc., would hold good to-day, except the prices of material. These have been reduced.

Mr. Henning.—I want to say that at that time the object of the paper seemed, indeed, to all of us to be to show that a surface railroad could not be economically operated by electricity, and those figures were pretty big figures to show that it was a physical impossibility. Therefore, I wish to say now that such things since that time have been put into operation, and that there are economical installations operated by electricity.

Mr. Hale.—Another statement was made which I think should be corrected, about voltage. I believe that the amount of copper required decreases as the square of the voltage. If we double the voltage we only need one-fourth as much copper. If we halve the voltage we need four times as much copper.

Mr. Oberlin Smith.—There is a rumor in the air (which, of course, we don't believe) that Mr. Scheffler is the gentleman who believes in running electric railroads with steam locomotives. But I want to call attention to another electric road which is successfully running. I refer to the Liverpool Overhead Railway. Probably he would say that the vehicles thereon are not locomotives, they are simply cars. I do not see what is the difference. A thing is a locomotive if it drives itself. So Mr. Henning's remarks are a good deal to the point. Although

Digitized by Google

such machines are not running everywhere, there are several of them running, on the whole.

In regard to that inverted trough shown in the sketch, it seems to me that if the whole inside was lined with a sheet of insulating material, following the contour of it, there would be a pretty good chance for getting a long length of insulating surface to avoid creepage of current.

Mr. Arthur E. Childs.—The author in his paper has touched on all the points of the electric railroad as it exists to-day, and he has entitled his paper "Present and Prospective Development of Electric Railroads." Now, after carefully reading his paper several times, I have failed to discover much description of prospective development. The only paragraph which refers to that at all is the next to the last, where he speaks of alternating-current apparatus as possibly doing something for the future. I would like to call the attention of the meeting to the fact that the alternating current is going to play, in long-distance transmission of power for electric railroads, a very important part in the near future. The continuous current, at five hundred volts pressure, is at present used up to about twenty-five miles—possibly two miles further than that. When, however, we get to distances greater than that, the cost of transmitting the necessary power becomes so great, the waste in the line becomes so great, and the total cost is so much increased, that railroad men have hesitated to extend their lines further without building additional power-houses. The future prospect for electric railroads which will run in country districts, and between towns and country villages, is that it will not be a conduit railroad, for the reasons which were given by one of the previous speakers as to the cost of construction and the cost of the copper necessary to carry the current at a low voltage. Therefore, engineers in the past few months have been turning to the alternating current as a means of helping them out in this question of long-distance transmission. Several important schemes have been placed on foot, such as the railroad which is being built now, in sections, between Harrisburg and Philadelphia, and between Jersey City and Philadelphia, and between Baltimore and Philadelphia—three great lines which are planned and which will doubtless be built within the next two years. Those railroads are seriously considering the application of the alternating current to their systems. The single-phase alternating-

Digitized by Google

current system is suitable, except, unfortunately, when we come to the motors. We have yet to see an alternating-current motor which will start with a load and continue, with a full load, with any sort of efficiency, using a single-phase current. The tri-phase and the two-phase currents have been tested in various ways, and at Niagara Falls to-day we see the Westinghouse Company putting in a two-phase system which is to transmit power for long distances; and the flexibility of the two-phase system is such that a direct current at five hundred volts potential, a two-phase alternating current, and an alternating current for arc and incandescent lights can all be taken from it. When you consider that such a system exists you will not be surprised that railroad men turn to this system to help them out with their long-distance transmission schemes. They propose to build central stations, or one large central station, near a water power, if they can get it, or, if they cannot, near an easy coal supply, where the power will be generated and transmitted at high voltages, from five to ten thousand volts, to sub-stations at distances of fifteen, twenty, or twenty-five miles, as the case may be, and there transformed or lowered to the necessary potential, five hundred volts, which is the accepted potential at present for motor-cars. Another point which has a bearing on this subject is the fact that these railroad companies are aiming to secure the privilege of lighting the streets and houses of the towns through which the railroads pass, thus increasing their sources of revenue. Now, to do this, of course, they must have a system which is flexible enough for these different purposes. In the near future we may expect to see this two-phase system developed in such a way that it will be available for such purposes. At the present time it seems to be the one great hope of electrical engineers in this particular line of work, and we are all looking forward to these roads which are being built, and which will very soon—within a few months—decide positively on the system which they will use in this work.

Mr. W. E. Partridge.—We have cars which are not locomotives, though they are self-propelled, running all around the country, and we have a variety of street-railway appliances for transporting passengers. One of the things that I am much interested in just now is the thing which comes between the rail and the car, that is, the wheel. What are we going to mount these cars on for wheels? We are using cast-iron wheels with

Digitized by Google

chilled treads at the present time, and they are wearing on some roads to the extent of 76,000 and 80,000 miles, and on some other roads they are wearing 16,000 miles. They are loaded anywhere from 6,000 to 8,000 pounds, and on several roads they have 9,000 pounds per wheel. The heaviest Pullman cars running only put about 7,500 pounds on their wheels, and they are not used for driving wheels. A trolley wheel running on a curve and being used for a driver acts very much like an old-fashioned paddle-wheel in the water. There is about 25 per cent. slip, as near as I can roughly measure it. When you put a cast-iron wheel grinding on a track which is covered with sand and dirt, and lubricated with the street water, you are attempting to use an emery wheel for a driving wheel, and it is pretty destructive on the rail, and it is excessively destructive to the wheel. If any gentleman knows anything better for a wheel, anything that will last better than cast iron, I should be very much interested to hear from him.

Mr. Jos. C. Platt.—In a conversation in one of the Pennsylvania coal fields a few days ago with a gentleman who was engaged in putting in haulage plants, he spoke about the wear of mine wheels. I am not positive now whether this was under steam locomotives or electric locomotives. But he spoke about the very rapid wear of mine wheels under such circumstances, and said that although the manganese steel wheels made at High Bridge, New Jersey, cost a great deal more than any other wheel, they wore so much longer that it was profitable to put them in. Of course, the wet coal dirt is not as bad in its cutting effect as wet sand, and therefore it is a little further removed from the emery wheel.

Mr. John Platt.—On the 6th page of the paper Mr. Field makes a statement with which I think we shall all most heartily agree; at least, those of us who are not particularly connected with some other system of electric traction. In speaking of underground conduit systems, he says: "Underground conduits, or the placing of the trolley wire with all its feeders under the surface of the street, is the ultimate and desirable result to be obtained in our large city lines." In this connection I would like to refer to the sketch of a system I saw working in Massachusetts a few weeks ago. It possesses some novel features, which may lead to some of the results which have been spoken of as being desirable—preventing leakage, and the pro-

Digitized by Google

tection of the conductors. Referring to sketch (Fig. 158), *A* is an elastic insulating envelope, the plant in question having a rubber tube, two and a half inches in diameter inside by about half an inch in thickness. A conductor, *B*, is fastened to the bottom of the tube, and on the top a series of copper strips, *C*, about six inches long, are fastened to other contact strips, *D*, on the outside. A trolley, *E*, carrying four wheels, *F*, operated from the platform of the car, presses on the strips, *D*, depresses the envelope, and makes contact between the strips, *C*, and the conductor, *B*, contact only being made at the points where cars are

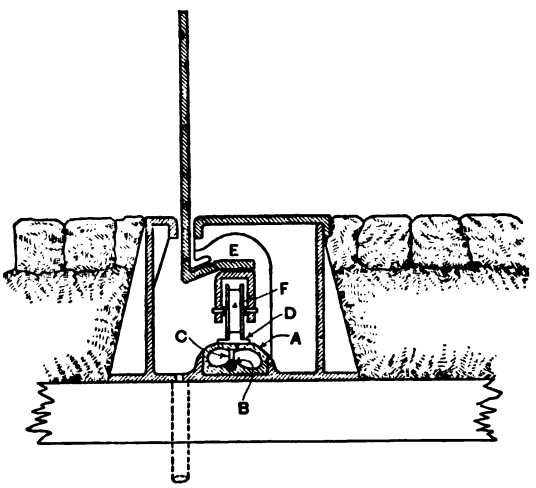

FIG. 158.

passing. The trolley and wheels are so constructed that they adjust themselves to any inequality in the track; the slot is to one side of the conduit, so that any water running into it does not fall on the conductor. It occurred to me that this construction might be of interest to some of the members present, and I shall be glad if some of our electrical friends can give us information as to whether such a construction would be likely to last under ground for any length of time. The points which I have heard raised against it are as to cost and as to the possibility of making such an elastic insulating envelope.

Mr. Perry.—I am sorry that Mr. Field has not gone further into the possible future methods of distributing current for electric traction. As a previous speaker has said, the alternating current seems to have a very great future before it, as the

Digitized by Google

facility with which it permits of transformation from high potential down to low potential enables us to transmit our energy economically at high potential, and then to reduce it for use to low potential. The same speaker said that the ordinary five-hundred-volt current could be carried twenty-five miles. I should rather doubt that. I do not believe there is to-day any five-hundred-volt current being carried half that distance. It would not pay to carry it that distance. The great bugbear to the multiple arc system, which is being used now extensively, and which involves all of these devices for utilizing referred to, is that it has this drop in the potential at the further end of the line, which is the product of the current into resistance of the line. Now, in laying out an electric installation such as an electric railway, we must assume that there will be a certain maximum load and provide for it, so as not to have the drop in the line exceed a figure which is permissible. But in an electric railway we have a variable load, which may be at the very end of the line, or it may be very near the station, and we have to prepare for something which we cannot foresee. We will lay out the size of our conductors so as to be the most economical under one assumed condition, but that one assumed condition may exist for a few minutes only during the whole twenty-four hours. During the rest of the time our plant is working uneconomically either because of too much copper or not enough. The drop in potential may be overcome by increasing the potential at our generator, so that if we have double the load in our line and double our voltage, our loss will still be the same; but if we could keep our current constant and vary the energy transmitted by varying our potential, we would have then a system laid out on a plan which would be the most economical whatever the load or whatever its position with regard to the station. As it is, with the multiple arc system we cannot vary the size of our copper. Our variable there is the current. Our loss in the line is proportioned to the square of the current, so that, as two cars are put on, four times the loss in the line is inevitable. If we have, as we must have, our copper constant, and our resistances constant, and then vary the pressure, we can install once for all the most economical sized conductor. That would involve a series method of distribution, such as we have in the arc-light system. The same current, about ten amperes, goes through one lamp and then through the second, and so on all around the circuit.

Digitized by Google

As lamps are added, resistances, of course, are added, but the electromotive force is increased at the dynamo automatically in order to overcome those resistances. The series method for distribution, for moving translating devices, has not been successfully applied heretofore on account of the difficulty of introducing a moving translating device into a circuit in series with other moving translating devices. Mr. Brush, when he was first working on the arc-light distribution, used that method of distributing the current, and he found that, because the irregularities of the line were cumulative, those of each lamp being added to those of all others, that the number of lamps which he could successfully work by the series method was about three. He finally invented what was known as the "automatic cut-out," so that when one lamp was accidentally put out the current was shunted, and in that way solved the problem of series distribution to stationary translating devices, so that it is theoretically possible to put any number of lamps on the line, and the practice is now to increase the number up to two hundred lamps, whereas two years ago sixty or sixty-five lamps was about the largest number. In increasing the distance to which we are going to send our current, to double it, we have to put in four times the amount of copper by the present methods, and this may be economical for one moment in the day, and uneconomical for the rest of the time.

By the constant current method of distribution, if the copper installed is the most economical for any one load under given conditions of distance, it will always remain the most economical, whatever the change of load or its position. Or, in other words, if we can assume the traffic to be strictly proportional to the length of road, our investment in copper, if the constant current system be employed, will be strictly proportional to the distance and also to the traffic. Compare this with present methods, where, under ideal conditions, the investment must increase as the *square* of those factors, and we see at once the enormous advantages possessed by the series system in cost of installation alone. Then as to operating expenses. In series distribution, if the brushes be reversed when bringing the car to rest or in checking its speed on a descending grade, the motor becomes a generator in series with the one at the power station, driven by the momentum of the car, or gravity, and therefore contributes energy to the line to the last turn of the wheels. Thus

Digitized by Google

the energy expended in bringing a car up a grade or in acceleration is recovered for use again by electrically braking the car as it descends the grade or is brought to rest, instead of being frittered away as heat on the brake-shoe, as in present practice. The possible saving in operating expenses in this way is doubtless far greater than most of us would suppose.

Lieutenant Sprague made some tests on the Third Avenue (Brooklyn, N. Y.) road some years ago to determine just how the energy transmitted was utilized. If I recollect rightly, he found that 83 per cent. of all the energy generated on his car was utilized in overcoming the inertia of his car and gravity, and only 17 per cent. was used for traction.

But the series system for railways has heretofore failed for the same reason that it failed for arc-lamps at first. The invention of the automatic cut-out converted what was a failure with the arc-lamp into a most unqualified success. The automatic cut-out for moving translating devices has now been invented, and this, together with some additional improvements that have been made, whereby the potentials required may be kept within limits, has, I believe, put the series electric road in the same position as regards practicability as the series arc-lamp has long occupied.

Mr. Oberlin Smith.—I agree with the last speaker that the series system is the ideal one, and very likely will be the future one if anybody can succeed in inventing a good one, which has not been done yet. One of the greatest objections that naturally occurs to us, of course, is that with that system we would have to have such an enormous potential at the beginning of the line that it would be a dangerous current. Whether that could be made entirely safe, I do not know. He said he did not believe there was a line running half of twenty-five miles. I would say there is a line running in front of my office where the current is carried thirteen miles. There is a perceptible drop in the current, but nothing to prevent the road from running smoothly.

Mr. George I. Rockwood.—Mr. Field suggests that steam engines appropriate for electrical work should be of the same kind as those used for rolling-mill work, his reason being that as the load fluctuates violently in both classes of work, and as the rolling-mill engine is found to be a success in furnishing power to rolls, it must be the only proper kind to use in electrical stations.

Digitized by Google

The idea most of us have of a rolling-mill engine is one having its cylinders over the crank-shaft, short stroke, and high-speeded. However, in rolling-mills we like to have a small space occupied by the engine to allow of free access to the rolls, a feature not necessarily all-controlling in electrical stations. Really, the only fundamental advantage of the rolling-mill type of engine for direct-connected generators lies in the fact that a fly-wheel of small diameter and high-speeded is less liable to break off the arms when suddenly stopped than a larger wheel running at the same rim speed but at a less number of turns per minute. The stress and strains set up in the reciprocating parts by sudden stoppage of their motion are of small moment when compared with the danger of exploding a cast-iron fly-wheel. I believe thoroughly in the advantages of a built-up, wrought-iron fly-wheel for engines carrying generator armatures on their crank shafts.

The whole problem, viewed from the standpoint of safety under wrenching stresses, is solved when a *fly-wheel* is made which will stand jerks.

*Mr. C. J. Field.**—The paper was projected as a condensed summary of the subject, and was not intended or expected, on account of the length to which it would have extended, to go into details and particulars in all branches. As to the future development, the writer only indicated in a measure what lines he thought it would take, and therefore did not attempt an extended description of the probable development of alternating multiphase currents for railway and power work. Undoubtedly this branch is going to be one of the most extended and interesting parts of long-distance railway distribution in the next few years, but it is a branch which should be treated separately and by itself.

With this explanation of the purpose of my paper, I will take up the points raised by the different parties.

The first speaker, Mr. Henning, deals interestingly with the subject, and I admire his commendable zeal in trying to undertake to show where electric tramways should be improved. The speaker, I think from his discussion, shows that he has evidently looked at it more from the point of view of an observant mechanical engineer, who, seeing some of the difficulties that

* Author's closure, under the Rules.

Digitized by Google

are there encountered, has not been sufficiently acquainted with the practical details to know wherein and how they can be remedied, and why others have not been remedied. Mr. Henning, I believe, unjustly condemns too widely the overhead trolley system as it stands to-day. I believe, as stated in the paper, that this system, as it is now developed, and properly built, does and will fill the requirements of a large proportion of general cases in the majority of our large towns and cities. As designed and built by the best engineers to-day it is a good mechanical and electrical job, and I do not believe Mr. Henning realizes to the full extent how much time, energy, and skill have been expended in bringing it to its present stage of development and service. When we realize what the trolley is actually doing in giving good service, and the stage of development to which it has been brought in a few years, as compared with the many years of development on other traction systems, we can in a measure appreciate more fully what has been done. Electric railways to-day are giving better service than any other system of traction.

The writer stated clearly and distinctly his views on the question of underground conduits, and that he believed they were the ultimate and desirable result to be reached in certain of our large cities, and that they were now being introduced for that purpose on a successful basis. Experiments have been made on underground conduits, but the reasons for their failure in the past are those stated in the paper. There are those, however, now being built in Washington and New York, which, I believe, will be beyond question successful, and will be shortly followed by their introduction into other cities. These conduits are built for double trolley open conduit, with insulated feeders run separately. Any conduit to be successful will be, in a majority of cases, a double trolley, and not a single trolley duct; that is, it will have two wires instead of one, and will not depend upon the track for return. The reason for this is that the insulation can be better maintained, and liability to short circuits more easily avoided. The conductors in the conduit should be a rod of fair size, or angle or channel iron, with proper allowance for expansion and contraction; these rods should be broken up into sections, in order to localize any trouble which may arise, and each section should be fed to by well-insulated underground feeders. Mr. Henning appears to have a very limited knowledge

Digitized by Google

of the cost of such a feeder system. The writer has installed underground feeders for overhead trolley in a number of cities, and he can say that these feeders alone cost, with their conduit with manholes, etc., for access, about double that of the overhead trolley system per mile. At Buffalo and Philadelphia feeders are installed in this manner and connected to the track every half mile or so. At Philadelphia the feeders and mains are placed entirely underground. At Buffalo only the main feeders are so placed.

As to the comparative cost of the underground conduit, we do not believe that any successful underground conduit will be installed at less than twenty to thirty thousand dollars per mile of single track. A first-class overhead span construction, with iron poles, etc., under the conditions of highest service, can be installed for a cost of about five thousand dollars per mile of double track, exclusive of main feeders. One of the main costs of an underground conduit is that large unknown factor of clearing right of way under the street. This is going to make the cost of an open electrical conduit with proper drainage equal to or even more than that of a cable conduit. One part where the cost will be less will be on curves and special work, as these will cost hardly any more than for straight work, whereas in cable conduits the cost runs very high on this special work. The main difficulty to be overcome in a conduit is insulation, and this is a subject with which Mr. Henning has had very little acquaintance on electric work when he says that there are over ten thousand different forms of insulators which can be used. Experiments have been made with almost every insulation, and it has come down in practical results to three or four different styles or kinds of insulation which are at all practical; and porcelain, with some secondary insulation added, seems to have proved the most successful. Probably some form of insulating material which is used on overhead construction, such as compressed mica and asbestos combined, will also prove satisfactory for this work. It is not a question of absolute short circuits or grounds so much as it is a question of surface leakage. One hardly realizes, unless he has actually looked into an underground conduit, the slime, filth, and other matter which are in it and afford the best means for surface leakage; but, notwithstanding all these difficulties, there is no doubt that a well-built and properly drained and cared-for conduit can be

Digitized by Google

successfully operated, and this year will see several good-sized commercial systems in operation in this country.

The system which Mr. Henning mentions as having been built by the Siemens-Halske Co. at Hamburg, and in which the diving-bell principle is used for keeping the water, etc., away from the trolley, is the Lachman system, and was installed by the Siemens-Halske Co. as an experiment. They are not as yet ready to recommend its adoption in other places, as they have not thoroughly tested it for a sufficient time. Those who have had large experience in the matter know that European methods in this regard are different from those in this country. In Europe the manufacturer installs a new thing at his own expense, and thoroughly experiments with it and demonstrates its success or failure. Then he is ready to put it on the market. In this country the manufacturer first gets an order for a new thing, and puts it in after having made a short shop trial of it, and then experiments with it at the expense of his customer. I do not wish to be understood as unjustly criticising the manufacturers, because it is their work which has done the most to develop the electrical business and put it in the position it is to-day; but there is no question that an unnecessary amount of experimenting has been done in the past at the expense of the customer. This is being done away with to a considerable extent, as manufacturers are gaining more good experience and are better able to turn out apparatus as contracted for.

The conduit in question at Hamburg was not placed on the ties, but on a special shallow yoke, to which about a five-inch girder rail was attached. In this country, with our deep girder rails of nine and ten inch section, it is possible with this form of duct to spike it directly to the ties. There are disadvantages, though, in these shallow ducts, which I think have hardly been appreciated by Mr. Henning and some others. If such a duct can be made successful, there is no question but that it can be made adaptable for many cases with a moderate traffic; but where the road has a heavy traffic, we believe a conduit of the general form and type of a cable duct, and somewhat deeper, perhaps, will be the one which will be successful. Shallow ducts were tried on cable work, and proved a failure.

The Siemens-Halske Co. have adopted for their Buda-Pesth conduit for double-track road a form which does not appear to have been mentioned in this discussion, and which largely

Digitized by Google

reduces the cost for double-track conduit. They make a special yoke, which goes between the two tracks, in which the two conduits are placed between the tracks, close to each rail. This makes one excavation instead of two, and one yoke, with manholes placed between, where they are accessible at all times. The trolley or plough is then suspended from one side of the car instead of from underneath.

The question of voltage or pressure to be used in an underground system is of the utmost importance, and is a factor which Mr. Henning does not appear to be acquainted with or to appreciate. Of course, the higher the pressure, the less the cost of distributing the current; but when it comes to underground conduits, the problem of insulation increases so largely in difficulty that it is conceded that the most successful conduits will have a lower pressure than the standard of present overhead trolley systems, probably one-half or two-thirds.

Another form of conduit which has been largely experimented with, and on which more patents have been taken out than on any other, is one of the many types of closed conduit in which some form of relay or magnet is used to cut in or out different sections of the circuit. This conduit, on the question of cost of installation, has many advantages, and if a surety of the working of these magnets could be relied upon, it would undoubtedly be a very practical system.

The Johnson-Lundell is one of these systems, and they have in New York city an experimental road of about 2,000 feet in length, in a vacant lot up-town, which has been in operation for the past year. The owners or controllers of this system are enthusiastic believers in the conduit, have had a large experience on electrical matters, and thoroughly understand what they are undertaking; and if such a conduit can be made a success, they will undoubtedly make it so.

The conduit which is described by Mr. Platt has undoubtedly a number of interesting features, but we think the main difficulty with such a form of conduit will be the question of flexible tubing which can be maintained and kept in good condition. I do not believe rubber can be used under the conditions existing therein, as it will quickly vulcanize and harden, and thus fail to operate.

As regards the comparative leakage or loss of current in the overhead and underground systems, I believe that in a well-

Digitized by Google

built overhead system, as now being put up, the question of leakage is a very small matter—in the case of such a system being less than one per cent. Of course this question of leakage varies with the different conditions of weather. In any underground system, no matter how well built, the surface leakage will exceed this amount. With the old style of insulators and apparatus which existed a number of years ago, the leakage on overhead systems was a very large matter, but it is reduced now to a very small item, as above stated. In the case of a heavy sleet storm that covers the line, there might be an increase for a few hours. But a conduit contains bare conductors, and no matter how good the insulation may be, on account of the dampness which exists there a large portion of the time there is going to be more leakage than in an overhead system. In either case, however, it is less than it is generally assumed or thought to be.

As to the question of the distance of distribution with the present standard of voltage—that is, five or six hundred volts—it is simply that of the cost of copper, and that results in the distance being simply a question of how much the business of that line will stand for that additional investment, and also in the fact that the less the number of power stations, the less the cost per car-mile of operation. We have found it advantageous where the traffic is at all considerable to distribute from ten to twelve miles either way from power house, which gives the distance, assumed by Mr. Childs, of twenty-five miles, which we believe he meant as a total distance, and not twenty-five miles each way from the power house. The systems in many of our large cities, and particularly the ones which have suburban extensions, are running twelve to fourteen miles in a number of cases. Of course, in some of these cases there is a considerable loss of pressure at the extreme ends of the lines. Where sufficient feeders have been installed, an auxiliary installation is used in the station for operating one or more generators at a higher pressure for feeding these long-distance lines, and the pressure over the system is thereby better maintained; and on any large system we believe this should be installed. Another method can be used in this connection for long-distance distribution, which has been devised by Mr. W. S. Barstow, of the Brooklyn Edison Co., in which a small auxiliary motor generator is used to increase directly the pressure on certain long-distance feeders.

Mr. Perry's argument in favor of a series system instead of

Digitized by Google

parallel system is a sound one in theory. Mr. Perry mentions the case of the series arc-lighting system, but he fails to state that where electric light and power plants attempted to do a considerable amount of stationary motor work on their series circuits it was not satisfactory, and, with the exception of one or two plants, a majority of these—at least those who have done it on any extensive scale—have changed over to multiple system, and use standard railway apparatus for their power distributing circuits.

I think this is sufficient proof of the fact that the multiple system, although it is at a disadvantage, so far as it is theoretically concerned, on the cost of distributing the current, has a strong advantage in the shape of apparatus for generating the current, and also for utilizing it for power purposes and motors, both stationary and railway. The series system of railway motors has some advantages in the matter of returning current into the line when the car is running down-hill, and in some other points, but they are not sufficient, up to the present time, to warrant its introduction. The future may show some further improvements and extensions in this regard.

As previously stated in this summary, we expressed our opinion as to the future of alternating power distribution. There is no question that the larger problems which are now arising will be so handled, as stated by Mr. Childs. The writer has had occasion to make some estimates on long-distance lines, of one hundred miles or more, which are to be built very shortly, and has found that by generating the current at 10,000 or more volts, with multiphase current, locating these generating stations thirty to fifty miles apart, according to conditions and circumstances, and distributing this current at high potential by step-up transformers, then reducing it by step-down transformers and converting it with motor generators, or motors and generators, to a direct continuous current, that we shall in this manner solve the question of long-distance distribution, and utilize our present form of motors. This will necessitate the location of small transforming stations every ten to twenty miles along the line, which stations, however, need be only a single room, with one or two of these generators in it, and will be practically automatic in their operation, and will require only slight attention and care. Some of the manufacturers and inventors are going still further, and hope

Digitized by Google

to use alternating currents direct on the motors, after they have been reduced, without converting them to direct currents; and there is no question that on stationary power work this is and will be successfully done, and railway motors for alternating currents are proposed to be built by some manufacturers. In all cases a multiphase current will be utilized. As Mr. Childs states, a single-phase motor has not been proven successful for motor purposes, in that a single-phase motor which will start under load has not been developed.

We have to-day in this country a number of examples of long-distance power-distributing plants, using multiphase current, and the largest and most prominent example of this kind is the plant at Niagara, now almost ready, where millions of dollars have been invested.

The writer regrets, although the discussion of the paper has been very interesting, that, especially before the Mechanical Engineers' Society, the parts of the paper which relate directly to the mechanical engineer were not more fully discussed. He believes that the mechanical engineer has done and will do much toward the perfection of the mechanical details of electric railway equipment and its operation, and that the failures, or partial failures, of work in this line, in some cases have been due to the lack of sufficient mechanical engineering.

As to the development of electric traction as compared with steam railroads, a commencement has been made, and a fair one, and we have a number of steam roads in the country commencing to adopt the system for some special cases on their roads. This will lead to more extended work. Some of these problems I have indicated in the paper. There is no question that the field for electric traction is going to be a far wider one than in the past, and the future development in these different lines is almost beyond comprehension and foresight.

Digitized by Google

DCXXXI.*

RELATIVE TESTS OF CAST IRON.†

BY W. J. KEEP, DETROIT, MICH.
(Member of the Society.)

MONOGRAPH, BASED ON TESTS MADE FOR THE COMMITTEE ON UNIFORM METHODS OF TESTING MATERIALS.

THE series of tests which forms the groundwork of this paper were made by the author as a member of the Committee of the American Society of Mechanical Engineers on Uniform Standards in Test Specimens, and Methods of Testing Materials. It is commonly assumed that the average record of a number of small test bars of steel will indicate with sufficient accuracy the quality of a large piece of the same steel. Another piece of steel, having the same chemical composition, is supposed to have the same physical qualities.

For the most part the study of cast iron has proceeded on the assumption that it could be treated in the same manner as steel. This view is, however, entirely incorrect. Cast iron is a very complex material, composed of a little more than ninety per cent. of pure iron, combined both chemically and mechanically with various metalloids, the principal of which are carbon, silicon, phosphorus, sulphur, and manganese. The material could not be melted and cast into moulds if it were not for the presence of the first two, and it seems almost impossible to prove that the rest are injurious. We mean that, in such small quantities as they are generally found in merchantable pig iron, they do no harm, and perhaps, for foundry uses, are a positive benefit. Carbon and silicon are certainly not impurities.‡

---

* Presented at the New York meeting (December, 1894) of the American Society of Mechanical Engineers, and forming part of Volume XVI. of the *Transactions*.

† Copyrighted 1895, by W. J. Keep.

‡ A full chemical analysis of each pair of test bars has been made by Mr. R. N. Dickman (71 Atwater Building, Cleveland, O.), assisted by Mr. John Douglass, and by Messrs. Dickman and Mackenzie, 1224 Rookery Building, Chicago.

All test bars 1″ □, and 1″ ○, and 1″ × 2″ have been made by Professor R. C. Carpenter and Mr. C. E. Houghton, at Sibley College, Cornell University.

All 2″ □, 3″ □ and 4″ □ test bars have been tested by Professor C. H. Benjamin, assisted by Messrs. Lyman Marshall and L. G. Robbins, at Case School of Applied Sciences, Cleveland, O.

The twelve series of test bars were made at the Detroit Stove Works, L. Crowley, Superintendent.

Digitized by Google

Cast iron is very much affected by any change in chemical composition, and its quality depends much upon the size or shape of a casting.

In melting cast iron the heat of the cupola, the intensity of the blast, and the manner in which the melted metal is handled, have a decided effect on the physical character of the casting. Different castings poured from one ladle of iron will vary in quality, and such variation cannot be explained by chemical analysis, as the chemical composition seems to be the same in both. The difference seems to lie in a different crystalline structure.

DIRECT TESTS.—Such irregularity in cast iron, which was expected to give uniform results, has led many to feel that the only reliable test of a casting was to break one which was an exact duplicate. Others hold that the test piece should be as nearly as possible the size of the casting, while others claim that a test piece should be of such a size that it should be an average of all castings made in a foundry, since it is not practicable to make one the size of each casting, and because each casting varies in size within itself. Some have suggested that a model be made of the casting; but this is the most incorrect of all, as a change of size at once changes the whole physical character of cast iron.

RELATIVE TESTS are such as are applicable to every case. For such a test any size of test piece might be selected; and having made one test record, every other record by the same method is so much greater or less than the original, which is regarded as standard. There is a direct relation between the test results and the composition of the iron, also between these and the size of casting, and also the shape. A relationship also exists between the test results and the conditions attending the melting and handling iron, and the making of the castings.

It would be well to fix upon a given size of test piece, which could be used by all, and a definite routine in producing it should be prescribed so as to prevent variations in conditions as much as possible. The only variable would then be composition. The test results would then in regular foundry practice indicate changes in composition. If the composition and routine

---

Additional series of test bars are to be made from white iron, car-wheel iron, and from both heavy and light machinery iron.

Full analysis of these will also be made by Mr. Dickman.

A full report will be made at the meeting of the A. S. M. E., to be held in Detroit the last week in June, 1895.

Digitized by Google

in each case was known, records obtained by different persons could be compared.

It is the object of this paper to provide a means for determining the physical quality of a casting of any size or shape, from the test record of any size of test piece which it may be thought best to use.

THE PRESENT SERIES OF TESTS.—It was decided to make enough test bars of definite composition, and of such sizes as would establish, experimentally, the relationship between the physical quality of test bars of any size and form that had ever been used for cast iron. We could then make rules, and construct charts, by which a test record of any size of test bar could be deduced from the record of a test bar of any other size. We could reconstruct formulæ which might be found incorrect. We could show by charts and diagrams the influence of a change in composition on any size of casting.

PIG IRON FOR TESTS.—We desired to use gray iron with as low silicon as would be used in any foundry making gray iron castings. Iroquois Furnace Company, of Chicago, sent us three tons of No. 3 Mal Bessemer pig iron, of clear uniform gray fracture, very strong and tough in the pig. It contained TC 4.07, GC 3.15, CC 0.92, P 0.23, Si 0.88, S 0.035, Mn 0.50. (G. D. Chamberlain, Chemist.) This iron was made from Lake Superior ore with coke.

The Ashland Iron and Steel Company, of Ashland, Wis., also sent us three tons of charcoal pig iron, brand "Hinkle," also from lake ores, containing TC 3.507, GC 2.69, CC 0.817, P 0.13, Si 1.09, S 0.015, Mn 0.72. (E. E. Johnston, Chemist.) Both of these companies analyze each cast, and furnish iron on a guaranteed analysis when required.

The "Pencost" ferro-silicon, by which silicon was added to these irons, was made at Bessie Furnace in the Hocking Valley district, from carbonaceous ores with coke. It contained TC 2.833, GC 2.072, CC 0.761, Si 10.87, P 0.49, S 0.142, Mn 0.70 (another analysis of another pig gave Si 10.27, and this iron was purchased on an analysis of Si 14.77).

The following analyses have since been made by Mr. Dickman:

	TC.	GC.	CC.	Si	S.	P.	Mn.
Iroquois.....	4.05	3.20	.85	.98	.035	.225	.49
Hinkle.....	3.50	2.78	.77	1.08	.012	.129	.70
Pencost.....	2.79	2.04	.75	11.00	.015	.487	.67

Digitized by Google

We would have been glad to make a similar series with Southern pig iron, but could not get such an iron in time with a guaranteed analysis. Series 13, 14, and 15 are from a regular foundry mixture of numbers 2 and 3 foundry, and numbers 1 and 2 soft Southern pig (De Bardeleben, Ala.), softened with a Northern (Ky.) silicon iron, containing about five per cent. silicon. Series 16 is from C. G. Bretting & Co.'s foundry, Ashland, Wis., is made of one half No. 1 Hinkle pig iron and one half machinery scrap, such as old pulleys and the scrap from an old matcher. The castings from that heat consisted of pulleys, gears, some chilled work, and cylinder packing rings.

Six series of test bars were made with Iroquois pig iron; six series with Hinkle pig iron; three series with De Bardeleben pig iron; and one series with Hinkle and scrap iron.

All series were melted in a cupola with Connellsville coke; the first twelve series were each melted separately, but the three De Bardeleben series were regular foundry mixtures of the Michigan Stove Company, while the last one was cast from a regular foundry mixture with "Hinkle" pig iron.

Mr. Dickman's analysis of the coke used in the first twelve series was: Fixed carbon, 90.35; volatile matter, 0.94; ash, 8.71 = 100. Sulphur, 0.97; phosphorus, 0.021.

(A full analysis of the half-inch test bars of each of these series may be found in Tables XVII. and XVIII.).

Description of Test Bars.—Each test bar for transverse testing was cast horizontal, two bars exactly alike being run from the same gate, which was set so as to feed the iron from the under side of the casting. There was one gate near each end of the mould. This arrangement would make the lower half of the casting solid, and if imperfections had appeared on the upper surface they would do comparatively little harm, as each bar was placed in the testing machine in the position in which it lay in the mould. Cast-iron yokes were bedded in the sand so that parallel iron surfaces should form the ends of the mould to chill each end of the bars, and to permit of the measurement of the shrinkage of the bar.

The iron charged in the cupola for the six series of both Iroquois and Hinkle contained 1.00, 1.50, 2 00, 2.50, 3.00, and 3.50 per cent. of silicon, which would represent all gray iron mixtures for machinery and light castings. To represent all sizes of test bars in use, and all sizes of foundry machine castings, the following test bars were made in each series:

Digitized by Google

2 test bars $\frac{1}{10}$″ × 1″	× 12″	Keep's size	In the 17 series there were 612 of these test bars for testing transversely or by cross breaking.
10 test bars $\frac{1}{2}$″ □	× 12″		
2 test bars 1″ □	× 14″	Engineers	
2 test bars 1″ □	× 26″		
2 test bars 1″ □	× 50″	Architects	
2 test bars 1″ □	× 50″		
2 test bars 1″ × 2″	× 14″	Water works	
2 test bars 1″ × 2″	× 26″		
2 test bars 2″ □	× 26″	Heavy castings	
2 test bars 3″ □	× 26″		
2 test bars 4″ □	× 26″		
4 test bars $\frac{2}{18}$″ ○	× 12″	For comparison	
2 test bars $1\frac{1}{8}$″ ○	× 14″		

For tensile test the following bars were made in each series: Two test bars, $1\frac{1}{8}$″ ○ x 12″ with spherical heads; two test bars, $1\frac{3}{16}$″ ○ x 6″ with spherical heads; two test bars, $1\frac{1}{2}$″ ○ x 15″ to be turned to $1\frac{1}{8}$″; or 102 bars in all for tension.

For compression, cylinders were turned from the broken ends of the last-named bars.

Description of Foundry Work.—The Detroit Stove Works, having a small cupola adapted to such work, volunteered to make the required castings. To give an idea of the magnitude of the experiments, it must be explained that it took one moulder a day and a half to mould a complete set of bars for the first cast; next day casting began, and it took six moulders and one melter three days to complete the twelve series of Iroquois and Hinkle bars.

The following table gives the information which will be needed in making a study of the test bars:

TABLE I.

Date, 1894.	No. Test.	Coke between Heats.	Coke Charge.	Pig Iron Charge.	Silicon-Iron Charge.	Pounds Castings.	Sprues Scrap.	Average Cupola Scrap.	Total Product.	Loss of Iron.	Minutes Melting.
Aug. 16	1	0	600	693	7	559	69	47	675		17
"	2	0	400	658	42	573	88	lbs.	708		8
"	3	0	400	622	78	539	68	to each	662		7
"	4	200	700	587	113	558	69	of the	674		10
"	5	0	600	552	148	523	68	nine	638		15
Aug. 17	6	0	600	517	183	531	67	heats;	633		15
"	7	100	600	700	0	559	79		685		15
"	8	100	600	664	36	544	52		643		15
"	9	100	600	628	72	580	62	58 lbs.	639		8
Aug. 20	10	0	650	592	108	494	60	average	607		14
"	11	0	650	556	144	544	59	of last	656		9
"	12	0	600	520	180	559	75	three	687		10

Digitized by Google

Observe that the Iroquois series ends with the first cast of the second day. The cupola began to clog with slag after the first heat, owing to its standing still between heats; limestone did not thin the slag, but quicklime did better. After heat 5 the slag had chilled so as to prevent another heat, but in each heat the slag did not affect the melting. At heat 9 the shell became too hot to continue, from the wind having been kept on continuously during the day between heats, to prevent an accumulation of slag. As soon as the iron was all melted it was all drawn off into ladles. First, two bull ladles were filled, taking about 250 pounds; with these the 4-inch bars were poured and then the 3-inch bars. The rest of the iron was caught in ladles holding 50 pounds. The half-inch bars were poured with iron caught soon after the bull ladles. Aside from those mentioned, no order was observed in pouring the rest of the bars. The 4 and 3 inch bars were shaken out at once, so that moulding could begin again. In charging, the silicon iron was put in first. There are objections to the routine pursued, but there are equal objections to any practical modification.

DEPTH OF CHILL.—Each test bar was cast between yokes presenting a chilling surface to each end. The iron entered from the under side of the mould, three inches from the chill at each end. It will be seen that the iron first struck the bottom edge of the chill and rose along its surface as the iron filled the mould. In the half-inch bars, and to a less extent in the one-inch bars, the moulds were filled more quickly, and with less agitation of the metal on the chilling surface. We have often previously noticed, even in half-inch bars, where a chilled end of a bar has tilted up and fallen inward so that the fluid metal would flow around it and against the chill. The smaller test bars seem to give the truest indication of chill, and in the larger bars the chill is wholly washed away after the chill surface has become too hot to produce a chill. This is proven by the following chill records, there being only one gate at one end of the mould:

TABLE II.

DEPTH OF CHILL.

Number of Series.	2	3	4	7	8	9	10	11	12
1" □ bar, end away from gate	.15	.04	.05	.80	.03	.10	.04	.03	.02
" " " nearest "	.06	.02	.04	.55	.19	.10	0	.02	.01
1" + 2" bar "away from gate	.04	0	0	.50	.12	—	0	0	0
" " " nearest "	0	0	0	.30	.06	—	0	0	0

Digitized by Google

All other bars had two gates, and in most cases the chill is entirely washed away, as shown by the following table:

TABLE III.

No. Series.	Si. ½" bars.	Average depth of chill in test bars.					
		½"□	1"□	1"+2"	2"□	3"□	4"□
1	.83	.80	.80	.80	.80	.80	.80
2	1.09	.63	.30	0	.01	.30	.30
3	1.73	.09	.04	0	0	0	0
4	2.13	.12	.05	0	0	0	0
5	2.42	.05	.05	0	0	0	0
6	2.74	.07	.03	0	0	0	0
7	.91	.80	.80	.60	.45	.30	0
8	1.16	.36	.30	.35	.15	.05	.30
9	.93	.65	.25	.45	.20	0	0
10	2.84	.05	.05	0	0	.04	0
11	2.56	.07	.03	.15	0	0	0
12	2.77	.04	.04	0	0	0	0

The fact that in series 1, where the chill was deep enough to prevent its being moved, it was the same in each size of test bar, shows that the depth of chill is the same whatever be the size of the casting, and that a small bar gives the same record as a larger one, and that in a small bar the chill is not likely to be moved. It also shows that, if a good chill were the main thing, the chilling surface should be made so that the iron should not move after it has reached the chilling surface. It is evident that the depth of chill is related to the percentage of silicon in the casting, but the quality of the metal melted exerts a great influence on chill. The iron first taken from a cupola has a greater depth of chill than that drawn later on, as shown by the depth of chill in the half-inch bars of series 7 and 9.

FOUNDRY CHEMISTRY.—For the benefit of those who may not be familiar with the action of the various metalloids which exist in cast iron, we will at this point give the chemical facts with which a founder must be familiar and which are necessary for the study of cast iron.*

MANGANESE need not be feared when it is below one per cent. in the casting. Ordinary foundry irons do not bring into a foundry mixture more than this quantity. When above one per

* Paper read at Foundrymen's Association, Philadelphia, April 4, 1894.

Digitized by Google

cent. it may increase shrinkage and hardness, but it does not increase combined carbon. It does not turn iron white nor increase a tendency to chill.*

PHOSPHORUS in the quantity usually found in cast iron exerts no influence on the physical quality, but it slightly reduces shrinkage. It has no effect on carbon. It adds some life to the iron. It weakens the iron when it contains much over one per cent., but American pig iron will rarely impart to castings more than this percentage, and for this reason it may be ignored.†

SULPHUR is an element which many claim to be in cast iron what poison is to life, because it seems to affect steel in that way. It seems very difficult to prove that in the quantity found in gray pig iron it either does any harm or good. In remelting, the iron often absorbs as much more as the fuel contained, but gray castings do not generally contain more than .05 and rarely more than .10 per cent. of sulphur. Perhaps such an amount has a slight effect on the chilling quality. There is, however, not the slightest indication that sulphur is in any way beneficial. Sulphur will get into a casting from the fuel, and chemists are accustomed to lay any unexplainable peculiarity to sulphur. If sulphur should exert any evil influence, a slight increase in silicon would at once counteract any effect.‡

CARBON is the most important element in cast iron. Without it, iron could not be melted readily and made into castings. The percentage of total carbon determines the melting point of the iron. Carbon in melted iron is probably always combined (or dissolved), and more can be retained by the iron when fluid than when cold. On cooling, any surplus separates out into graphite and makes a gray casting. Total carbon, no doubt, exerts an influence on strength.

COMBINED CARBON directly influences shrinkage.

GRAPHITIC CARBON, by dividing the grains of metal, softens cast iron; it also removes brittleness, and by the mechanical separation of the grain may cause weakness; but so many variations occur that the only way to be certain as to strength is by actual testing. This form of carbon accompanies an open grain, which

* Keep, "Manganese in Cast Iron," *Trans. Am. Inst. Mining Eng.*, Vol. XX., p. 291, 1891.

† Keep, "Phosphorus in Cast Iron," *Trans. A. I. M. E.*, Vol. XVIII., p. 450, 1889.

‡ Keep, "Sulphur in Cast Iron," Engineering Congress, Chicago, 1893, *Trans. A. I. M. E.*, Vol. XXIII., p. 382.

Digitized by Google

gives trouble in large castings, especially in those which must resist hydraulic pressure, by causing a spongy and open grain. It sometimes causes difficulty in obtaining the requisite strength, closeness, lack of brittleness, softness, and low shrinkage.

SILICON lessens the ability of the iron to hold carbon in the combined state when cold; therefore, any increase of silicon will decrease the combined carbon.

Silicon is of little use in cast iron, except as it acts on carbon. Its influence is not direct, but acts through its change of the carbon. The greater the quantity of combined carbon present, the greater will be the influence of silicon.

An iron deficient in silicon will be white in a small casting, because the formation of the crystals is so rapid that the flakes of graphite are too small to be seen.

A large casting from the same metal, by cooling more slowly, not only has a coarser crystalline structure, but the flakes of graphite are larger and give a color to the casting. From such an iron a small casting may be white, a larger one mottled, and a very large casting may be gray. If the small casting were made to cool as slowly as a large casting, or if it were annealed, the same change in crystalline structure would take place, and the color would be gray. Silicon is the controlling element, and is the only element that the founder need take account of, except to see that the iron contains sufficient carbon for the silicon to act upon. By silicon changing combined carbon into graphite, the casting occupies more volume than if the carbon remained combined. This is one cause of a decrease of shrinkage. Within limits, the more silicon the less combined carbon, and the less shrinkage. As silicon grows less, shrinkage increases.*

SHRINKAGE OF CAST IRON.—The general understanding is that the shrinkage of a casting is the difference in length between it and the pattern from which it was made, or rather between it and the mould in which it was cast. It is given in thousandths of an inch per foot of length. A pattern-makers' shrink rule is one-eighth of an inch longer than the standard foot, as for practical purposes cast iron is estimated to shrink one-eighth of an inch to each foot of dimension. As a matter of fact, the shrinkage is a very variable quantity, and is influenced by the composition of the iron used, and by the size and shape of

* Keep, "Silicon in Cast Iron," *A. I. M. E.*, Vol. XVII., page 863, 1889.

Digitized by Google

the casting. The fluid iron by its weight fills every portion of the mould. That which first touches the mould cools and becomes solid, crystals forming on all such surfaces. New crystals form on the inner surface of this shell until the metal becomes rigid. As soon as this shell is rigid, it begins to contract in every dimension, and this continues until the casting is perfectly cold. In all castings, on the formation of each crystal, portions of the component elements of the cast iron separate out and are caught between the crystals of iron. The principal element which thus separates is graphite. The size and compactness of the crystals is due to the size of the casting, which is a secondary cause of variation in shrinkage. All carbon in fluid iron is supposed to be combined with or dissolved in the iron, and fluid iron is capable of holding more carbon in combination than it could hold when cold. For this reason pig iron that is saturated with carbon, that is, contains all that it can dissolve and hold when it is melted, will be gray when it solidifies, on account of the particles of black carbon being caught between its crystals. Silicon lowers the saturation point for carbon at the temperature of solidification of the iron, so that, by adding silicon to cast iron that is not gray, it will become so.

Silicon of itself increases shrinkage and hardens cast iron, but by its influence on carbon—that is, by driving it out of the combined state—it softens the casting and decreases shrinkage. We therefore say that silicon in foundry mixtures controls shrinkage and softens cast iron. When a farther portion of the fluid metal inside the rigid shell solidifies, it also shrinks and tends to pull towards the shell, and when the last portion at the center solidifies, there may not be enough to fill the spaces and form a solid casting.

If a cavity is likely to be left at the centre of the casting, by churning the metal in the gate, a connection may be made to the open spot, through which fresh fluid metal may be fed to fill such cavity. The slower a casting cools, the larger will be the crystals; therefore, a large casting will shrink less in its outside dimensions than a small casting from the same metal.

The amount of shrinkage then varies:

First, in proportion to the total quantity of carbon in the pig iron.

Second, in proportion to the percentage of silicon present.

Third, in proportion to the size of the casting.

Digitized by Google

In applying these truths the foundryman will constantly meet exceptions on account of varying conditions, some of which we will mention.

An iron which has received the required silicon in the blast-furnace has generally a lower shrinkage than when the silicon is added at the time the iron is re-melted. For example:

Gaylord white pig iron (Si 0.18), with Si increased to 2.42 per cent., gave shrinkage .160 for a half-inch bar.

F[L]M gray pig iron (Si 1.25), with Si increased to 2.41 per cent., gave shrinkage .140 (half-inch bar). (Edward Orton, Jr., chemist.)

The silicon in some high silicon irons will exert more influence than that contained in others. For example:

TABLE IV.

Per cent.	Per cent. put in crucible.	Shrinkage. In. per ft. ½" bar.	Strength. Lbs. ½" bar.	Chemist.
F[L]M gray pig + 4.36 Pencost	2.50 Si	.143	380	E. Orton, Jr.
" " " + 4.70 Ashland	2.50 "	.143	378	G. H. Ellis.
" " " + 4.35 Dayton	2.50 "	.145	375	H. S. Fleming.
" " " + 4.41 Sloss	2.50 "	.190	407	R. B. & Co.

The latter Sloss silicon iron contained only 1.21 total carbon, and did not leave enough carbon in the casting for the silicon to act upon. The treatment of the iron in re-melting and in handling before it reaches the mould influences shrinkage, hardness, and strength.

The iron that first comes down onto the cupola bottom is harder and has a higher shrinkage than that which comes after the cupola is thoroughly hot, though it may contain more silicon. For example:

TABLE V.

	Shrinkage ½" bar.	Strength ½" bar.
First iron with 3.22 per cent. Si	.163	390
Last " " 3.14 " "	.121	400

(Analysis by Cary & Moore, Chicago.)

And the average difference for eleven days between the shrinkage of the first iron and that half an hour later was 0.026. These results were obtained at the works of the Michigan Stove Co. with Southern iron.

Digitized by Google

Iron as it comes from the blast furnace generally has a less shrinkage and is softer than after being re-melted in a cupola, as the following will show:

TABLE VI.

	A Half Inch Square Test Bar.									
	TC.	GC.	CC.	Si.	S.	P.	Mn.	Shr.	Str.	Chemist.
Iroquois, covered crucible..	3.76	....	....	.76	....	.25	.88	.157	324	Johnston.
" Cupola	3.82	2.36	1.46	.83	.05	.21	.35	.172	338	Dickman.

As seen in Table VII. (and in XIX.), irons having the same chemical composition may have totally different physical qualities.

TABLE VII.

Carbon.	Silicon.	Shrinkage.	Strength.
One mixture, 3.24	2.87	.131	485
Another " 3.08	2.85	.173	413

(Anderson, Chemist.)

In these cases, taken from the results of September 19th and October 2d of Table VIII., both were tested in the same way, and the chemical composition is substantially the same, and yet the physical qualities are very different.

On account of the exceptions to general rules, there is no given shrinkage for any given percentage of silicon. There are too many unknown conditions occurring in foundry practice to make the metallurgy of cast iron an exact science. For these reasons it is impossible to prescribe a given chemical composition that will at all times give a required physical record. All estimates must be approximate. But in one shop, with substantially one mixture, the shrinkage record will vary in proportion as silicon varies.

CONTROLLING A FOUNDRY MIXTURE BY THE SHRINKAGE OF A HALF-INCH TEST BAR.

Table VIII. is a record of tests of half-inch bars from a foundry running four days each week, making thin castings wholly from

Digitized by Google

Southern iron, softened by a Northern silvery iron. The individual irons were varied on account of irregular receipts from the furnace or for other reasons. For several months previous the shrinkage had been kept quite uniform at about .130. But on and after September 20th the iron received contained less silicon, though the appearance of the pig iron gave no such indication. From September 25th to 28th the mixture was all Southern, no silvery iron being used. After that date the extra necessary silicon was imparted by the silvery iron.

It will be seen that the shrinkage is as good, if not a better, indication of the silicon required, than the actual chemical analysis. The hardness of the castings varied with the shrinkage.

TABLE VIII.

All records are those of a half-inch test bar.

Date. 1894.	Total Carbon.	Silicon.	Shrinkage ½ in. Bar.	Strength.	Deflection at 400 lbs.	Depth of Chill.	Date. 1894.	Total Carbon.	Silicon.	Shrinkage ½ in. Bar.	Strength.	Deflection at 400 lbs.	Depth of Chill.
Sept. 11	....	....	.131	454	.20	.08	Oct. 8	....	....	.134	460	.20	.04
" 12	....	....	.133	480	.22	.09	" 9	....	....	.129	463	.23	.04
" 13	....	....	.145	446	.21	.08	" 10	....	....	.151	443	.20	.06
" 17	....	....	.142	433	.22	.05	" 11	....	....	.133	379	.23	.03
" 18	....	....	.135	450	.22	.07	" 12	....	....	.133	414	.20	.04
" 19	3.24	2.87	.131	485	.20	.09	" 15	....	3.31	.132	425	.21	.02
" 20	....	....	.155	444	.21	.07	" 16	....	3.19	.146	430	.22	.03
" 21	....	2.31	.162	403	.22	.07	" 17	....	....	.128	421	.21	.05
" 24	....	....	.156	445	.20	.11	" 18	....	3.37	.126	478	.21	.07
" 25	....	....	.164	450	.22	.11	" 19	....	....	.128	448	.21	.04
" 26	....	....	.172	422	.22	.09	" 22	....	....	.127	470	.20	.04
" 27	....	2.17	.180	415	.22	.05	" 23	....	....	.128	405	.23	.02
" 28	....	....	.174	442	.21	.07	" 24	....	....	.127	450	.20	.08
Oct. 1	....	3.13	.141	436	.21	.03	" 25	....	....	.126	478	.19	.10
" 2	3.08	2.85	.172	413	.21	.04	" 29	....	....	.127	469	.20	.05
" 3	....	2.89	.153	435	.21	.02	" 30	....	....	.127	461	.20	.01
" 4	....	3.06	.150	341	....	.03	" 31	....	....	.125	465	.20	.03
" 5	....	3.04	.166	402	.22	.04	Nov. 1	....	....	.126	445	.21	.05

(Duncan Anderson, Chemist.)

The strength and deflection are the average of three half-inch square bars.

While these shrinkages and silicons may not correspond with those of another foundry, yet compared with each other there is a direct relationship between shrinkage and silicon. Often by changing the quantity of each pig iron in a mixture without affecting the percentage of silicon, the shrinkage may be changed. on account of the physical quality of some of the irons. Often this physical constitution will exert more influence than the chemical composition.

Digitized by Google

But for everyday practice, whether with one uniform mixture, or with a special mixture, if the shrinkage of a half-inch test bar is greater than the standard shrinkage, increase the silicon until it comes down again to the standard. (In Table VIII. the standard shrinkage was .125 to .130. For ordinary machine irons it would be near .150.)

RELATION OF SHRINKAGE TO THE SIZE OF CASTING.—The variation in shrinkage in different sizes of castings is due to the *difference in the rate of cooling.* The larger the casting the larger will be each individual crystal, and the looser will each crystal fit into those next to it.

This causes the casting to have less shrinkage, and is independent of the chemical composition of the iron.

Table IX. shows the shrinkage of each size of test bar in the six series made from Iroquois iron.

TABLE IX.

IROQUOIS.

No. Series.	Supposed Silicon in Pig Mixture.	Dickman's Silicon Analysis, and Shrinkage per Foot of Test Bars.											
		½" □		1" □		1" x 2"		2" □		3" □		4" □	
		Si.	Shr.	Si.	Shr.	Si.	Shr.	Si.	Shr.	Si.	Shr.	Si.	Shr.
1	1.00	.88	.183	.79	.160	.78	.148	.82	.131	.72	.116	.88	.102
2	1.50	1.09	.172	1.14	.150	1.70	.138	1.33	.125	1.10	.110	.88	.106
3	2.00	1.73	.166	1.73	.145	1.70	.130	1.50	.109	2.17	.069	2.50	.039
4	2.50	2.13	.162	1.69	.143	1.60	.123	1.80	.099	2.17	.066	2.67	.128
5	3.00	2.42	.157	2.65	.105	2.40	.094	3.36	.075	3.67	.067	4.67	.077
6	3.50	2.74	.161	2.69	.130	2.70	.086	2.62	.077	4.30	.085	3.22	.033

Table X. shows the shrinkage of the six series of "Hinkle."

TABLE X.

HINKLE.

No. Series.	Supposed Silicon in Pig Mixture.	Dickman's Silicon Analysis, and Shrinkage per Foot of Test Bars.											
		½" □		1" □		1" x 2"		2" □		3" □		4" □	
		Si.	Shr.	Si.	Shr.	Si.	Shr.	Si.	Shr.	Si.	Shr.	Si.	Shr.
7	1.00	.91	.176	.93	.149	.86	.144	.90	.139	.85	.115	1.12	.072
8	1.50	1.16	.160	1.29	.145	1.10	.126	1.22	.122	1.24	.093	1.03	.092
9	2.00	.98	.156	1.40	.141	1.05	.134	1.00	.128	2.15	.083	3.50	.036
10	2.50	2.84	.154	2.55	.124	2.70	.092	2.00	.094	1.75	.075	1.57	.067
11	3.00	2.56	.157	2.76	.102	2.97	.090	2.49	.062	2.64	.053	2.84	.023
12	3.50	2.77	.144	3.75	.098	3.41	.092	2.91	.068	2.89	.043	2.95	.023

Digitized by Google

Table XI. shows the shrinkage of De Bardeleben (Ala.) pig iron.

TABLE XI.

SOUTHERN.

No. Series.	Supposed Silicon in Pig Mixture.	Dickman's Silicon Analysis, and Shrinkage per Foot of Test Bars.											
		1¼" □		1" □		1" x 2"		2" □		3" □		4" □	
		Si.	Shr.	Si.	Shr.	Si.	Shr.	Si.	Shr.	Si.	Shr.	Si.	Shr.
14	....	2.70	.148	2.80	.096	2.81	.083	2.79	.072	2.94	.068	2.81	.085
13	....	3.13	.130	3.22	.095	3.17	.091	3.19	.079	3.20	.072	3.15	.082
15	....	3.29	.123	3.50	.094	3.52	.096	3.48	.091	3.75	.078	3.42	.082

Table XII. shows the shrinkage of "Hinkle" and "Scrap."

TABLE XII.

C. G. Bretting.

No. Series.	Supposed Silicon in Pig Mixture.	Johnston's Silicon Analysis, and Shrinkage per Foot of Test Bars.											
		½" □		1" □		1" x 2"		2" □		3" □		4" □	
		Si.	Shr.	Si.	Shr.	Si.	Shr.	Si.	Shr.	Si.	Shr.	Si.	Shr.
16	....	1.86	.171	1.77	.151	1.82	.143	1.77	.129	1.77	.100	1.80	.069

Chart XIII. (Fig. 159) illustrates the results of Tables IX. and XI. graphically.

Chart XIV. (Fig. 160) is a graphic record of the results in Table X.)

These charts, and Tables IX., X., and XI., show the two influences which affect shrinkage, viz.: First, as silicon increases shrinkage decreases. Second, as the size of a casting increases the shrinkage decreases, and this is independent of the chemical composition.

This latter proposition is true, because as the size increases the rate of cooling is necessarily slower, which causes the crystals to be larger, and to be more loosely joined together.

The crystals, therefore, occupy more space, and the casting is thereby larger than it would have been if it had been cooled more slowly.

Digitized by Google

The rate of cooling is represented by the ratio $\frac{V}{S}$, that is, the cubic contents in inches divided by the square inches of cooling surface. In Charts XII, XIV., and XV., horizontal measurements represent the ra'e of cooling, and perpendicular measurements represent the shrinkage per foot in length.

The ratio $\frac{V}{S}$ representing the rate of cooling of a half inch square test bar is .12; that of a one inch square test bar is .25, etc.

The half-inch test bar cools so rapidly that its shrinkage represents the influence of the silicon in the test bar; therefore, the shrinkage records plotted on a perpendicular line representing the ratio .12, show the shrinkage of a half-inch test bar, due to chemical composition.

Any increase in the size of the test bar (which is equivalent to slower cooling) will cause the crystals to be larger and the shrinkage to be less; therefore, we find that the shrinkages of the one-inch square bar show the influence of composition as did the half-inch square bars, and it also shows the added influence due to slow cooling.

A round test bar, having the same contents of a one-inch square test bar would have a ratio of cooling of .29, and would therefore cool more slowly and would have a less shrinkage than the square bar.

This secondary influence is more and more apparent as the size of the casting increases, until in the four-inch square bars its effect is greater than the chemical influence of three and a half per cent. of silicon was in a test bar half an inch square. It is also apparent that the secondary influence is greater in the castings containing an increased percentage of silicon.

For the purpose of keeping the records separate in charts XIII. and XIV., the record 1st (and 7th) is a heavy full line, the 2d (and 8th) is a heavy broken line, the 3d (and 9th) is a heavy dotted line. The 4th (and 10th) is a light full line, the 5th (and 11th) is a light broken line, the 6th (and 12th) is a light dotted line.

The records of the last three series being below the others, record 14 is represented by a light full line, 13 by a heavy full line, and 15 by a heavy broken line.

Digitized by Google

FIG. 159. CHART XIII.

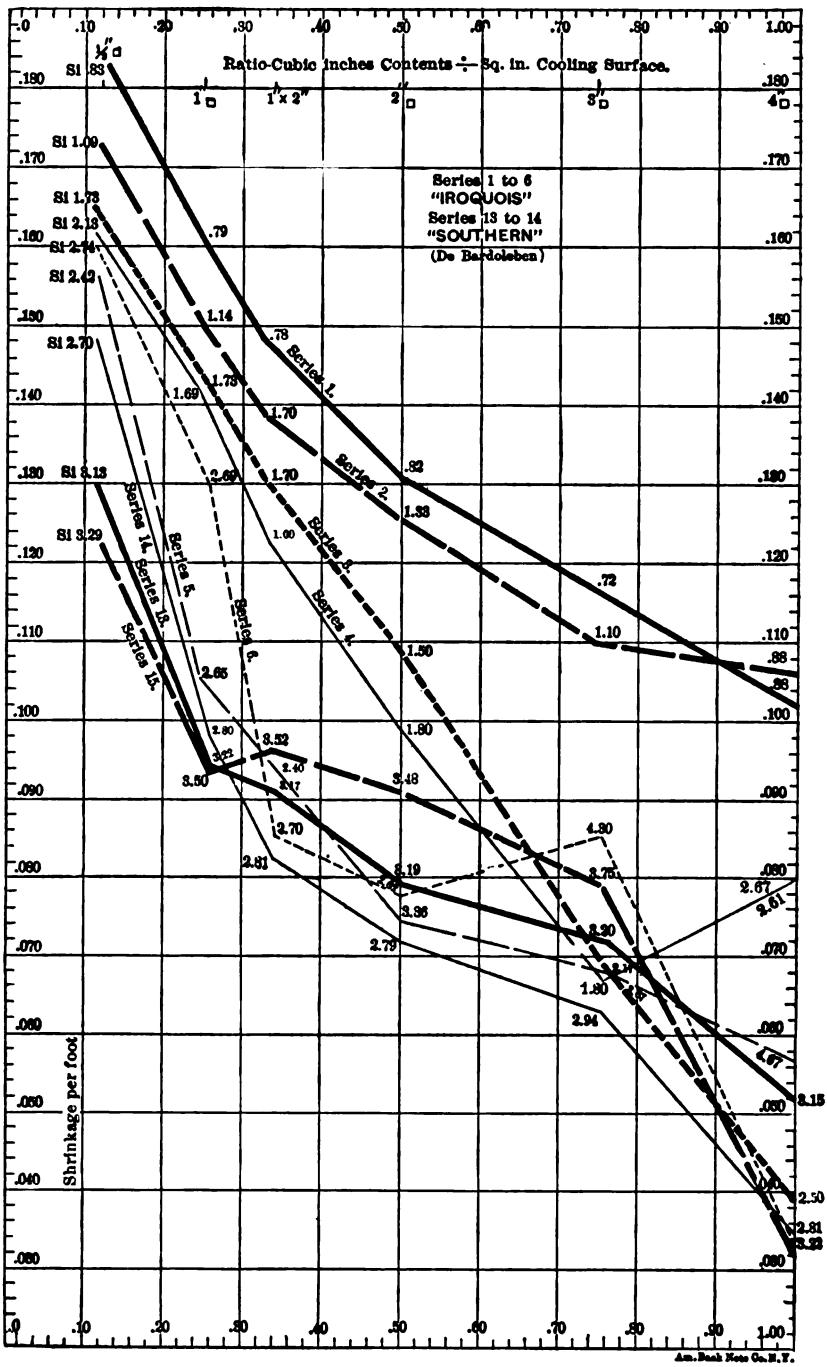

Digitized by Google

FIG. 160. CHART XIV.

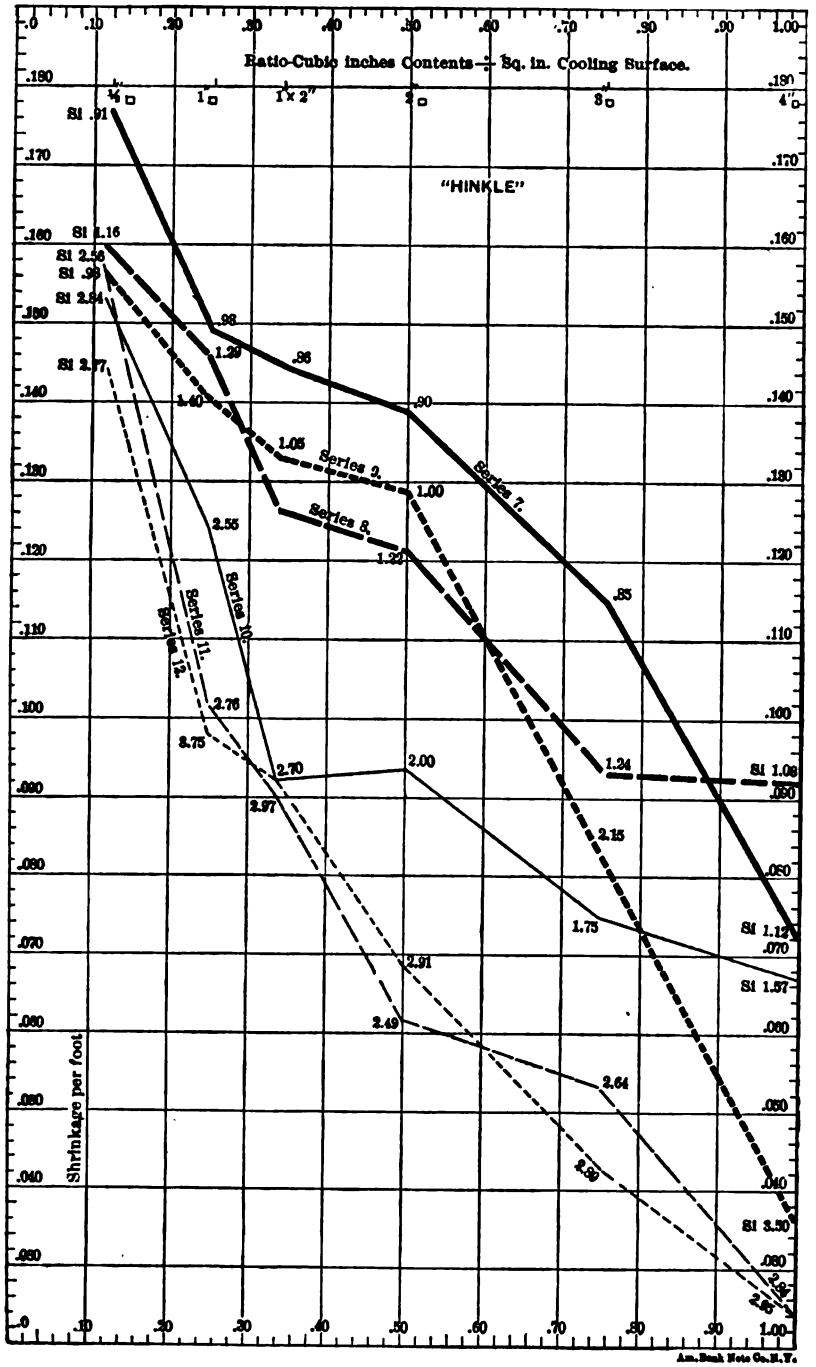

Digitized by Google

Since Chart XIII. contains records of coke irons re-melted in a cupola with coke, it may be taken to fairly represent ordinary foundry practice.

We may take series 1 as a fair representation of a moderately heavy casting, a little more than one and an eighth inches thick, having a considerable surface and with a shrinkage of one-eighth of an inch to the foot, and containing about one per cent. of silicon. We may take series 15 as a fair representation of the lightest castings, say from one-quarter of an inch down to one-twelfth of an inch thick, and of considerable surface, and with a shrinkage of one-eighth of an inch per foot. From these records I have constructed Chart XV. (Fig. 161).

From this chart a founder can, at a glance, see the difference in shrinkage between different parts of a casting on account of size and the strain incident thereto. He can tell the shrinkage of any casting, larger or smaller, from the shrinkage of any size of test bar which he may use from the same mixture. If he knows the size of a casting and the shrinkage that is desired, he can find this result on the chart and can proportion his pattern accordingly; and, by following the curved line either way, can find approximately the percentage of silicon which the iron mixture should contain to produce a desired shrinkage or a given quality of casting. The figures on each side denote the shrinkage in inches per foot, and each curved line shows its variation in any size of casting due to a given variation of silicon in the mixture put into the cupola. The following examples illustrate some of the uses of Chart XV.:

Example 1.—Wanted to make a cylinder three inches thick and so long that we may neglect the end cooling surface. The shrinkage of a half-inch test bar from the iron mixture is .153. What percentage of silicon does it contain, and what will be the shrinkage of the casting?

Take a strip of the three-inch thick casting of any size, say 10 x 1 inches; this contains 30 cubic inches and 20 square inches of cooling surface; 30 divided by 20 equals a ratio of 1.50. In Chart XV. find shrinkage .153 on the left-hand margin. A horizontal line will cut the silicon scale at 2.25, which is the approximate silicon. Follow between the curves until the ratio 1.50 is reached (in this case outside the chart), and it will be found that the approximate shrinkage of the casting will be .062.

Digitized by Google

FIG. 161. CHART XV.

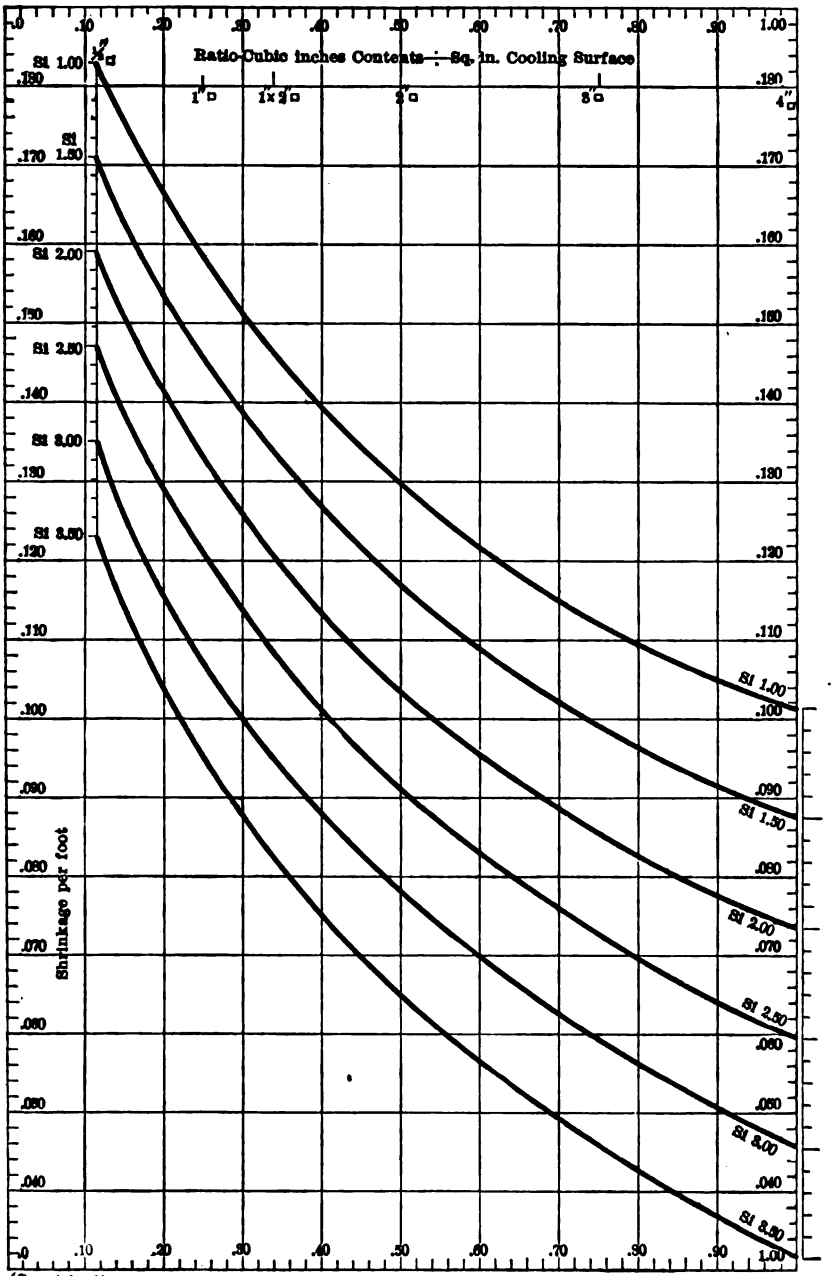

(Copyrighted) Am. Bank Note Co. N. Y.

KEEP'S TABLES APPROXIMATE RELATION OF SHRINKAGE TO SIZE & PERCENTAGE OF SILICON.

Digitized by Google

Table XVI. is the same as Chart XV. in tabular form.

TABLE XVI.

KEEP'S TABLES. APPROXIMATE RELATION OF SHRINKAGE TO SIZE AND PERCENTAGE OF SILICON. (Copyrighted.)

	½" □	1" □	1"x2"	2" □	3" =	4" □	Percentage Silicon.
Perpendicular readings show Decrease Shrinkage due to increase in Silicon.	.133	.158	.146	.130	.113	.102	Per cent. 1.00
	.171	.145	.133	.117	.098	.087	1.50
	.159	.133	.121	.104	.085	.074	2.00
	.147	.121	.108	.092	.073	.060	2.50
	.135	.108	.095	.077	.059	.045	3.00
	.123	.095	.082	.065	.046	.032	3.50

Horizontal readings show decrease of shrinkage due to size.

(Happening in a pipe foundry a short time ago, I was asked to estimate the total shrinkage of a water pipe three inches thick and 29 feet long. Not knowing the silicon it contained, I used the data of this example and gave the shrinkage of the whole pipe as 1.79 inches. The actual measure was $1\frac{5}{8}$ inches [or .060 per foot].)

If it had been required to make a casting of these dimensions with a shrinkage of .062, which had been found satisfactory for hydraulic cylinders, or for water pipe, and it was required to find the silicon in a mixture to produce such a casting, follow down the ratio 1.50 until .062 is reached, then run along the curve to a silicon scale, and we will find the silicon to be 2.25.

If we had wished a shrinkage of one-eighth of an inch per foot, we would have reduced the percentage of silicon in the mixture.

Example 2.—Having .153 as the shrinkage of a half-inch square bar, it is desired to reduce this record to that of a one-inch square bar. Find .153 on the left-hand side of the chart, carry it across to the perpendicular corresponding to ratio of a half-inch bar (.125), run down the curves until the line corresponding to the ratio (.25) of a one-inch square bar is reached, which shows a shrinkage of .128.

The shrinkage of a bar 1 x 2 inches (.116) can be found in the same way.

Digitized by Google

If we had used a one-inch square bar, we could from the chart reduce its record to that of any other size.

Any foundry can construct a similar chart based upon observed shrinkage of test bars made from its materials used, and can work out similar problems.

Chart XV. will be found to be a near approximation of the results in any foundry. By its use any founder can, by calculating the shrinkage of a half-inch test bar, produce a definite size of casting, either by varying the silicon in the iron from which the casting is made, or by making the size of the pattern such that the shrinkage of a given mixture will produce a casting of the required size.

In every-day foundry practice the silicon or the size of the pattern cannot be varied to suit every thickness of casting to be made at one cast; therefore, the shrinkage of each one of the castings made cannot be kept uniform at one-eighth of an inch per foot.

This is especially the case in a single casting of varying thickness.

NOTE.—It must always be kept in mind that on account of local conditions, and the varying quality of the iron used in any mixture, any result is only approximate, but for the purpose of controlling a foundry mixture it is all that is required.

BEST SIZE OF TEST BAR FOR THE CONTROL OF A FOUNDRY MIXTURE.

In the study of cast iron, and in the control of a foundry mixture (see Table VIII.), the half-inch test bar, provided it will run entirely gray and not white, has an advantage, for it is so small that it is only influenced by the composition of the casting. Therefore, its record is a mechanical analysis, telling whether more or less silicon is required.

It gives this information better than a chemical analysis, because it holds so little heat that it can show the effect, not only of the influence of all the elements entering into the composition of the iron, but also takes into account all local conditions and the nature of all the irons used in the mixture. It also tells its story in a definite way, and does not require the trained judgment of an expert to make it of practical value. Whatever may be due to influences other than those of the silicon contained in the casting, an increase or decrease of silicon will lower or raise the shrinkage.

Digitized by Google

TABLE XVII.

¼ inch Test Bars.						How Cast.	Total Carbon.	Gr Carbon.	Cd Carbon.	Sulphur.	Phosphorus.	Mangam.	¼ inch Test Bar.		
Silicon in Chart.	Shrinkage in Chart.	Shrinkage in Casting.	Silicon in Casting.	Grade or Test Number.	Name.								Strength.	Deflection.	Chill.
1.00	.183	.183	.83	(1)	Iroquois	Cupola *	4.07	3.15	.92	.03	.23	.50	289	.13	.80
1.04	.182	....	....	.....	.....	.....	....	....	....	....	....	....	....	....	....
1.08	.181	....	....	.....	.....	.....	....	....	....	....	....	....	....	....	....
1.12	.180	....	....	.....	.....	.....	....	....	....	....	....	....	....	....	....
1.16	.179	....	....	.....	.....	.....	....	....	....	....	....	....	....	....	....
1.20	.178	....	....	.....	.....	.....	....	....	....	....	....	....	....	....	....
1.24	.177	.177	1.25	Swed.	FL M	Crucible	3.55	3.22	.33	.04	.06	.19	404	.23	1.00
1.28	.176	.176	1.43	.....	Stewart	Crucible	....	....	....	.04	.09	.55	275	.15	....
1.32	.175	.174	1.25	.....	FL M	Crucible	....	....	....	....	....	....	374	.26	.65
1.36	.174	.174	1.25	.....	FL M	Crucible	....	....	....	....	....	....	409	.29	.25
1.40	.173	....	....	.....	.....	.....	....	....	....	....	....	....	....	....	....
1.44	.172	....	....	.....	.....	.....	....	....	....	....	....	....	....	....	....
1.48	.171	....	....	.....	.....	.....	....	....	....	....	....	....	....	....	....
1.52	.170	....	....	.....	.....	.....	....	....	....	....	....	....	....	....	....
1.56	.169	....	....	.....	.....	.....	....	....	....	....	....	....	....	....	....
1.60	.168	....	....	.....	.....	.....	....	....	....	....	....	....	....	....	....
1.64	.167	.166	1.72	.....	H. R. Worthington	Cupola *	....	....	....	....	....	....	446	....	.10
1.68	.166	.166	1.73	(3)	Iroquois	Cupola *	3.69	3.21	.48	.03	.27	.50	389	.27	.09
1.72	.165	.165	1.76	No. 3	Napier	Crucible	3.65	3.50	.15	....	.85	.48	423	.19	.80
1.76	.164	.165	2.00	No. 1	Summerlee	Crucible	3.38	2.92	.46	....	1.27	1.67	377	.17	.65
1.80	....	.164	1.77	G. F.	Sloss	Crucible	3.37	2.85	.52	....	.56	.40	442	.22	....
1.84	.163	.164	2.16	F. F.	De Bardeleben	Crucible	2.29	2.28	.01	.19	.62	.19	362	.20	.15
1.88	.162	.162	2.13	(4)	Iroquois	Cupola *	3.55	3.10	.45	.04	.28	.35	427	.31	.12
1.92	.161	.161	1.83	No. 3	De Bardeleben	Crucible	2.14	2.04	.10	.10	.77	.31	354	.19	.30
1.96	.160	.160	1.74	G. F.	De Bardeleben	Crucible	1.79	1.51	.28	.17	.70	.88	365	.23	0
2.00	.159	.159	2.00	No. 2	De Bardeleben	Crucible	2.16	1.90	.26	.08	.79	.23	365	.27	.01
2.04	.158	.157	1.83	.....	Hinkle	Crucible *	....	2.83	....	....	.16	.91	408	.37	.06
2.08	.157	....	....	.....	.....	.....	....	....	....	....	....	....	....	....	....
2.12	.156	.156	1.97	.....	Stewart	Crucible	....	....	....	.01	.07	.24	386	.36	....
2.16	.155	....	....	.....	.....	.....	....	....	....	....	....	....	....	....	....
2.20	.154	.154	1.93	No. 2	Tuscarowus	Crucible	3.62	3.18	.44	....	.70	.86	418	.24	.30
2.24	.153	.154	2.26	.....	H. R. Worthington	Cupola *	....	....	....	....	....	....	436	....	.06
2.28	.152	.152	2.42	2 Soft	Lady Ensley	Crucible	....	....	.20	....	.67	.89	437	.23	.35
2.32	.151	.152	2.64	.....	Stewart	Crucible	....	....	....	.05	.07	.50	353	.27	.02
2.36	.150	.150	2.63	.....	Holyoke Mach. Co	Cupola *	2.94	....	....	....	....	....	300	.22	.07
2.40	.149	....	....	.....	.....	.....	....	....	....	....	....	....	....	....	....
2.44	.148	.148	2.70	(14)	Mich. Stove Co	Cupola *	3.15	2.89	.26	.09	.20	.59	383	.22	.06
2.48	.147	....	....	.....	.....	.....	....	....	....	....	....	....	....	....	....
2.52	.146	....	....	.....	.....	.....	....	....	....	....	....	....	....	....	....
2.56	.145	.145	2.16	Basic	Ætna (Ga.)	Crucible	....	....	....	....	2.28	.31	228	.14	.90
2.60	.144	.144	2.29	No. 2	Dayton	Crucible	....	....	....	.02	1.57	.66	375	.25	0
2.64	....	.144	2.77	(12)	Hinkle	Cupola *	3.34	3.07	.27	.03	.30	.59	456	.33	.04
2.68	.143	.143	2.50	.....	FL M. & Ashland	Crucible	....	....	....	....	....	....	378	.22	.23
2.72	.142	....	....	.....	.....	.....	....	....	....	....	....	....	....	....	....
2.76	.141	....	....	.....	.....	.....	....	....	....	....	....	....	....	....	....
2.80	.140	....	....	.....	.....	.....	....	....	....	....	....	....	....	....	....
2.84	.139	.139	3.15	No. 1	Calumet	Crucible	3.56	2.46	1.10	.02	1.06	1.35	290	.16	....
2.88	.138	....	....	.....	.....	.....	....	....	....	....	....	....	....	....	....
2.92	.137	.137	3.01	No. 2	Franklin (N. Y.)	Crucible	3.18	3.06	.12	.01	1.43	.17	328	.21	.10
2.96	.136	....	....	.....	.....	.....	....	....	....	....	....	....	....	....	....
3.00	.135	....	....	.....	.....	.....	....	....	....	....	....	....	....	....	....
3.04	.134	.134	2.94	No. 1	Poughkeepsie	Crucible	3.27	3.17	.10	tr	1.24	.19	355	.25	.12
3.08	.133	....	....	.....	.....	.....	....	....	....	....	....	....	....	....	....
3.12	.132	....	....	.....	.....	.....	....	....	....	....	....	....	....	....	....
3.16	.131	....	....	.....	.....	.....	....	....	....	....	....	....	....	....	....
3.20	.130	.130	3.13	(13)	Mich. Stove Co	Cupola *	3.14	3.03	.11	.09	.82	.43	334	.22	.06
3.24	.129	.129	3.24	2 Soft	De Bardeleben	Crucible	2.81	2.00	.81	.05	.76	.21	238	.25	.02
3.28	.128	.128	3.46	(784)	Mich. Stove Co	Cupola *	....	....	....	.08	....	....	400	.23	.03
3.32	.127	.128	3.45	(787)	Mich. Stove Co	Cupola *	....	....	....	.08	....	....	500	.25	.02
3.36	.126	....	....	.....	.....	.....	....	....	....	....	....	....	....	....	....
3.40	.125	....	....	.....	.....	.....	....	....	....	....	....	....	....	....	....
3.44	.124	.123	3.29	(15)	Mich. Stove Co	Cupola *	3.13	3.03	.10	.09	.98	.50	427	.24	....
3.48	.123	.123	3.52	(780)	Mich. Stove Co	Cupola *	....	....	....	....	....	....	440	.23	.05
3.52	.122	.121	3.14	(791)	Mich. Stove Co	Cupola *	2.95	2.47	.48	.10	1.05	.47	400	.22	.07
3.56	.121	.117	3.52	3 Sil	Star	.....	....	....	.06	....	1.04	.41	410	.23	.35

* When marked thus, the analysis was made of the half-inch test bar.
When the test has no mark the pig was analyzed before re-melting.

Digitized by Google

TABLE XVIII.

¼ inch Test Bars.				Grade or Test Number.	Name.	How Cast.	Total Carbon.	Gr. Carbon.	Cd Carbon.	Sulphur.	Phosphorus.	Mangan.	¼ inch Test Bar.		
Silicon in Chart.	Shrinkage in Chart.	Shrinkage in Casting.	Silicon in Casting.										Strength.	Deflection.	Chill
1.00	.183	.185	2.62	G. F.	Ensley	Crucible	3.14	2.21	.93	....	.88	.16	368	.20	.25
1.04	.182	.184	4.41	G. F.	Sloss	Crucible	1.21	1.16	.05	.11	....	....	260	.17	.01
1.08	.181	.240	.18	Wh'e	Gaylord	Crucible	2.98	.95	2.03	.03	.26	.09	266	.08	Wh'e
1.12	.180	.240	.94	Wh'e	De Bard'n... †	Crucible	2.01	0.67	1.34	.42	.76	.29	435	.13	Wh'e
1.16	.179	.226	1.36	Mot'd	De Bard'n... †	Crucible	2.74	1.00	1.74	.36	.76	.31	376	.11	Wh'e
1.20	.178	.220	.37	Wh'e	Dayton..... †	Crucible	....	....	....	.11	1.85	.18	426	.15	Wh'e
1.24	.177	.177	2.16	G. F.	De Bardeleben..	Crucible	....	....	.85	....	.87	.13	438	.23	.45
1.28	.176	.176	.91	(7)	Hinkle.....	Cupola *	4.02	2.78	1.24	.03	.20	.47	338	.17	.80
1.32	.175	.....	....	.....	.....	.....	.....	....	....	....	....	....	....	....	.....
1.36	.174	.....	....	.....	.....	.....	.....	....	....	....	....	....	....	....	.....
1.40	.173	.....	....	.....	.....	.....	.....	....	....	....	....	....	....	....	.....
1.44	.172	.172	1.09	(2)	Iroquois.....	Cupola *	3.90	3.20	.70	.04	.27	.31	339	.22	.63
1.48	.171	.171	1.86	.....	C. G. Bretting..	Cupola *	3.26	2.51	.74	.03	.22	.38	....	....	.....
1.52	.170	.170	2.07	G. F.	Pioneer.....	Crucible	.....	....	.29	....	.58	.38	352	.21	.15
1.56	.169	.169	3.73	No. 3	Sloss.....	Crucible	.....	....	.13	....	.63	.23	330	.21	.....
1.60	.168	.168	.88	Mot'd	Dayton.....	Crucible	.....	....	....	.04	1.79	.20	355	.13	.90
1.64	.167	.167	.88	2 Mill	Dayton	Crucible	.....	....	....	.04	1.55	.28	363	.14	.80
1.68	.166	.166	.83	.....	Mayville.....	Crucible	.....	....	....	....	....	....	231	.09	.....
1.72	.165	.164	3.46	2 Pl'n	Buffalo.....	Crucible *	2.99	2.61	.38	.02	.33	1.50	343	.24	.....
1.76	.164	.164	3 64	No. 2	Buffalo.....	Crucible *	3.00	2.66	.34	.02	.32	1.50	362	.25	.....
1.80	....	.163	3.99	No. 1	Buffalo.....	Crucible *	3.10	2.75	.35	.02	.34	1.59	386	.27	.....
1.84	.163	.163	3.22	(788)	Mich. Stove Co.	Cupola *	2.91	2.80	.63	.12	1.02	.49	390	.22	.15
1.88	.162	.161	2.74	(6)	Iroquois.....	Cupola *	3.38	3.01	.37	.03	.30	.43	471	.35	.07
1.92	.161	.160	1.16	(8)	Hinkle.....	Cupola *	3.84	3.17	.67	.02	.16	.37	395	.29	.36
1.96	.160	.159	1.54	No. 3	Eureka.....	Crucible	3.45	2.90	.55	....	.83	.23	343	.25	.45
2.00	.159	.157	.72	.....	Iroquois.....	Crucible *	3.76	....	....	....	.25	.88	324	.22	.45
2.04	.158	.157	2.42	(5)	Iroquois.....	Cupola *	3.54	3.19	.35	.02	.33	.36	430	.30	.05
2.08	.157	.157	2.56	(11)	Hinkle.....	Cupola *	3.32	3.00	.32	.03	.26	.58	443	.30	.07
2.12	.156	.156	.93	(9)	Hinkle.....	Cupola *	3.81	3.28	.53	.02	.26	.48	329	.21	.65
2.16	.155	.156	2.53	No. 1	De Bardeleben..	Crucible	2.88	2.42	.46	.04	.60	.23	384	.25	.01
2.20	.154	.156	4.70	3 Sil	Ashland.....	Crucible	3.33	3.12	.21	.04	1.54	.96	352	.15	.50
2.24	.153	.154	2.84	(10)	Hinkle.....	Cupola *	3.20	2.91	.29	.02	.21	.63	439	.35	.05
2.28	.152	.....	....	.....	.....	.....	.....	....	....	....	....	....	....	....	.....
2.32	.151	.151	1.93	No. 1	Bushong.....	Crucible	3.34	2.88	.46	.01	1.09	.14	374	.22	.18
2.36	.150	.150	1.31	No. 2	Dayton.....	Crucible	.....	....	....	.02	1.48	.65	380	.26	.07
2.40	.149	.150	2.04	1 Mill	Dayton.....	Crucible	.....	....	....	.03	1.46	.67	336	.19	.04
2.44	.148	.149	3.65	1 Soft	De Bardeleben..	Crucible	2.91	2.11	.83	.06	.60	.27	375	.27	.04
2.48	.147	.148	1.64	No. 2	Poughkeepsie...	Crucible	3.57	3.46	.11	.03	1.22	.24	376	.22	.20
2.52	.146	.147	1.94	O. B.	Dayton.....	Crucible	.....	....	....	.02	1.57	.39	379	.24	.10
2.56	.145	.145	1.64	G. F.	Alice (O).....	Crucible	.....	....	.45	....	.75	.20	390	.17	.35
2.60	.144	.....	....	.....	.....	.....	.....	....	....	....	....	....	....	....	.....
2.64	....	.....	....	.....	.....	.....	.....	....	....	....	....	....	....	....	.....
2.68	.143	.....	....	.....	.....	.....	.....	....	....	....	....	....	....	....	.....
2.72	.142	.....	....	.....	.....	.....	.....	....	....	....	....	....	....	....	.....
2.76	.141	.....	....	.....	.....	.....	.....	....	....	....	....	....	....	....	.....
2.80	.140	.140	4.91	2 Sil	De Bardeleben..	Crucible	1.51	.53	.93	.08	.58	.25	295	.24	.01
2.84	.139	.139	2.03	No. 1	Norway.....	Crucible	3.75	3.12	.63	.01	1.65	.87	373	.21	.02
2.88	.138	.139	4.35	Sil	Bessie.....	Crucible *	.....	....	....	....	....	....	478	.25	.10
2.92	.137	.....	....	.....	.....	.....	.....	....	....	....	....	....	....	....	.....
2.96	.136	.....	....	.....	.....	.....	.....	....	....	....	....	....	....	....	.....
3.00	.135	.....	....	.....	.....	.....	.....	....	....	....	....	....	....	....	.....
3.04	.134	.....	....	.....	.....	.....	.....	....	....	....	....	....	....	....	.....
3.08	.133	.....	....	.....	.....	.....	.....	....	....	....	....	....	....	....	.....
3.12	.132	.131	4.70	1 Sil	De Bardeleben..	Crucible	2.17	1.60	.57	.06	.59	.27	360	.27	.02
3.16	.131	.131	3.52	(782)	Mich. Stove Co.	Cupola *	.....	....	....	.08	....	....	530	.27	.02
3.20	.130	.....	....	.....	.....	.....	.....	....	....	....	....	....	....	....	.....
3.24	.129	.....	....	.....	.....	.....	.....	....	....	....	....	....	....	....	.....
3.28	.128	.....	....	.....	.....	.....	.....	....	....	....	....	....	....	....	.....
3.32	.127	.....	....	.....	.....	.....	.....	....	....	....	....	....	....	....	.....
3.36	.126	.....	....	.....	.....	.....	.....	....	....	....	....	....	....	....	.....
3.40	.125	.....	....	.....	.....	.....	.....	....	....	....	....	....	....	....	.....
3.44	.124	.124	2.91	.....	R. S. & Co.....	Crucible	3.16	2.85	.31	.05	1.03	.25	383	.23	.10
3.48	.123	.....	....	.....	.....	.....	.....	....	....	....	....	....	....	....	.....
3.52	.122	.121	2.13	No. 2	Irondale.....	.....	3.10	....	....	.08	2.23	.22	385	.27	.05
3.56	.121	.120	4.85	Sil	Alice (Ala.).....	.....	2.96	2.74	.22	.01	.59	.20	325	.32	.06

* When marked thus the analysis was made of the half-inch test bar.

When the test has no mark the pig was analyzed before re-melting.

† These four samples do not belong in this table, but are introduced to show the shrinkage of high numbers of pig iron.

Digitized by Google

In the study of the influence of other elements, if the silicon and conditions are kept uniform, and a single element is varied, the variation in shrinkage will be due to that element. For this practical use no other size of test bar will answer. In a one-inch square bar, and more so in those of larger dimensions, the secondary influence of the more coarsely crystalline structure varies the record, oftentimes more than the composition of the iron. In large castings this secondary influence completely overshadows the influence of composition, and thus prevents the large test bar from indicating the composition. The half-inch bar gives the information needed by a founder regarding composition more accurately than any other known method. By Chart XV. the change in shrinkage due to size can be approximated.

The convenience of the use of a half-inch bar is also greatly in its favor.

Table XVII. has in the first two columns the same silicons and shrinkages as the half-inch square bars in Chart XV., and arranged against these shrinkages are various pig irons and foundry mixtures whose shrinkage and silicon percentages correspond with them, and which show that Chart XV. is a fair approximation to actual practice.

Table XVIII. has in the first columns the silicons and shrinkages of Chart XV., and has arranged against them pig irons and foundry mixtures with the same shrinkages, but whose silicons do not correspond with those of the chart. These are, therefore, exceptions, but it will be difficult to construct another chart which will conform to so many mixtures as Chart XV.

The irons in these two tables show that while silicons and shrinkages are related, yet the influences exerted in the furnace, or some peculiar chemical combination, or some peculiar treatment, causes a high or a low shrinkage, and that a chemical formula will not at all times produce a given physical structure.

Our statement is, that although we may not be able to reduce records of pig irons or of mixtures in different shops to a definite relation between the silicon and the shrinkage, yet in any one foundry, with a substantially uniform mixture or in any special mixture repeated, the shrinkage will indicate the percentage of silicon, and *vice versa*. In such cases the shrinkage will indi-

Digitized by Google

cate whether the silicon in the mixture should be increased or diminished.

SHAPE OF A CASTING in relation to its physical quality.

The method by which a casting becomes solid influences its strength. The attaching of the first crystals to the sides of the mould and of those forming later, on the inner surface of this shell, and the shrinkage of the shell, and of each crystal which is attached to the shell, causes a strain on all parts of the casting. The crystals along all the surfaces not only pull on each other, but the whole surface pulls the ends towards the centre, and pulls from the centre towards the ends, which tends to pull the casting apart at *b* (Fig. 162). Inside the casting the crystals tend to pull away from the diagonal connecting *b* and *e*, and on that line the two systems of crystals forming on the surfaces *a b* and *b c*, towards the middle of the casting, do not form a perfect union in the line *b e*. There is more metal in this corner than in any other part of the casting, which would cause the centre to become solid last, and if any sponginess or cavity forms anywhere it will be here.

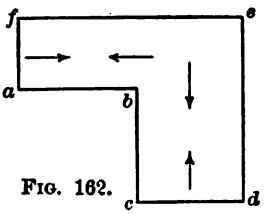

FIG. 162.

The sides *f e* and *d e*, being longer than the inner surfaces *a b* and *b c* will contract more and tend to pull the casting apart at the angle *b*. In all pattern construction, angles should be made as round as possible, and all abrupt changes of shape should be avoided. Changes in size in the parts of a single casting cause unequal cooling, and often result in a casting pulling apart before it leaves the mould.

Consulting Chart XV. will show what strains will be placed on the parts of a casting that vary in size.

ANNEALING CASTINGS.—To produce very soft castings with very low shrinkage some founders melt only the softest No. 1 pig iron, and do not even use the scrap made from such iron; while others use cheaper irons for the castings, and afterwards place the castings in an annealing oven until most of the combined carbon which they contain is changed into graphite. Instead of increasing silicon in their mixtures to cause a decrease in combined carbon, they prefer to anneal the castings. It would be impossible to get as low a shrinkage or as soft iron in the cupola as by this process.

Digitized by Google

We give one example of this. All bars were poured from one ladle.

TABLE XIX.

	Shrinkage.		½" □ Test Bar.									
	½" □	1" × ½" □	Chill.	Stren'h.	Def.	TC.	GC.	CC.	Si.	P.	S.	Mn.
No. 1 Bar not Annealed	.155	.169[2]	.14	425	.28	3.77	3.32	.45	1.78	.505	.041	.568
No. 3 Bar not Annealed	.154[2]	.172[2]	.14	415	.27	.....	.....	.....	.....	.....	.....	.....
Average	.155	.171	.14	425	.27[2]	.....	.....	.....	.....	.....	.....	...
No. 2 Bar before Annealed	.157	.166[2]	.....	.....	.....	.....	.....	.....	.....	.....	.....	.....
No. 4 Bar before Annealed	.155	.169	.....	.....	.....	.....	.....	.....	.....	.....	.....	.....
Average	.153	.167	.....	.....	.....	.....	.....	.....	.....	.....	.....	.....
No. 2 Bar after Annealed	.096	.069	.06	400	.36	3.77	3.68	.09	1.78	.510	.043	.568
No. 4 Bar after Annealed	.096[2]	.070	.08	400	.34	.....	.....	.....	.....	.....	.....	.....
Average	.096	.069[2]	.07	400	.35	.....	.....	.....	.....	.....	.....	.....

Analysis by Dickman.

The chill in the annealed castings is very dull and only half as deep as before annealing. The grain is much darker and is filled with glistening points. The unannealed thin bars broke without taking set, while the annealed thin bars took a set of over four-tenths of an inch at the centre before breaking. The unannealed square bars took a set at three hundred pounds of .10 of an inch, and after annealing took a set of .20 of an inch.

These samples are furnished by Frank J. Dutcher, manager, Hopedale Machine Company, Hopedale, Mass.

DISCUSSION.

Mr. E. D. Estrada.—According to Mr. Keep, the physical properties of a casting depend upon the chemical composition of the mixture, the size of the casting, its shape, its rate of cooling, and the conditions attending its manufacture. These conclusions cannot properly be drawn from the results obtained by the experiments which Mr. Keep describes. With reference to the chill, Mr. Keep says that the smaller test-bars seem to give the truest indication of chill, and that in larger bars the chill is

Digitized by Google

entirely removed after the chilled surface has become too hot to produce a chill. This makes the chill independent of the size, chemical composition of mixture, shape, etc., and dependent on the temperature which may be attained by the "chill surface." Further, he says (bottom of page 547), that the depth of chill is the same no matter what may be the size of the casting, and that a small bar gives the same record as a large one, which is a direct contradiction of the statement that the small bar gives the truest indication of chill. Again he says (page 547), "it is evident that the depth of chill is related to the percentage of silicon in the casting, but the quality of the metal melted exerts a great influence on chill. The iron first taken from a cupola has a greater depth of chill than that drawn later on, as shown by the depth of chill, Series 7 and 9." With all these factors affecting the chill of a casting, how can we determine it from a single one? That the chill is not proportional to the silicon in the mixture is evident from a glance at Table III. (page 548), where we see that a percentage of .83 of 1 per cent. of silicon produces a chill of .80 in all the bars of Series 1 which vary in sectional dimensions from ½ inch square to 4 inches square, and .91 of 1 per cent. silicon produces a chill of .65 in a ½-inch square bar, and none in the 3-inch and 4-inch square bars of Series 9. The fact that a percentage of 2.77 silicon, Series 12, produces a chill of 0.4 in a ½-inch square bar and none in the 2-inch, 3-inch, and 4-inch square bars, cannot be accounted for by saying that the chill was moved on account of its not being strong enough; for certainly, if it was strong enough to resist the moving tendency in Series 1, it should have remained the same throughout in Series 7 and 9. The records of Series 8 clearly show that the chill does not depend on the size of bar or amount of silicon in the mixture, but is due to some cause other than that supposed by Mr. Keep.

The shrinkage of a casting, Mr. Keep states, is influenced by the composition of the mixture, the size and shape, and the rate of cooling. He considers the rate of cooling proportional to the size of the castings, for he says: "The slower a casting cools the larger will be the crystals, therefore a large casting will shrink less in its outside dimensions than a small casting from the same metal." If the rate of cooling depended on the size of a casting, in order to change the rate of cooling it would be necessary to change the size of the casting.

Digitized by Google

On one page we are informed that the shrinkage varies in proportion to the percentage of silicon in the mixture, and also in proportion to the size of the casting. On another page he tells us that there is no given shrinkage for any given percentage of silicon. The writer would like to know what, in Mr. Keep's opinion, is the cause of shrinkage in a casting; and if we cannot discover the cause, how can we construct tables and charts to determine the effects of it?

In order to accept Mr. Keep's method for testing cast iron, we must also accept the principles upon which it is based, which are, that the shrinkage depends:

1st. Upon the chemical composition of the mixture.

2d. Upon the size of the casting.

3d. Upon the rate of cooling.

The tables and charts are based on this assumption. Mr. Keep repeatedly mentions in his paper that the shrinkage does not depend on the silicon, for he says (near bottom of page 553): "Irons having the same chemical constitution may have totally different physical qualities. For this reason there is no given shrinkage for any given percentage of silicon. It is impossible to prescribe a given chemical composition that will at all times give a required physical record." Referring to Table VII. (bottom of page 553), he says: "In these cases the same brands of iron were used, and both were tested in the same way, and the chemical composition is substantially the same, and yet the physical quality is very different."

Now, as to size, it may be said in general that the physical properties of a body do not depend upon its size, and cast iron does not present an exception to this rule. Mr. Keep says (middle of page 555): "The variations in shrinkage in different sizes of casting are due to the difference in the rate of cooling," which he considers proportional to the ratio between the volume and the square inches of surface. Hence, for a given definite body, there can only be one rate at which it can cool. The laws which govern the transferrence of heat from one body to another are thus set at naught by Mr. Keep. Example 1 (page 563) indicates the method for obtaining the percentage of silicon and shrinkage for any casting, from the shrinkage of the proposed standard; but before we can accept this method Mr. Keep must tell us what shrinkage will be produced in the half-inch bar by a given percentage of silicon, then prove that the

Digitized by Google

shrinkage is proportional to the rate of cooling, and that the rate of cooling is proportional to the size, and that the size is proportional to the ratio between the volume and the square inches of surface.

In working out Example 1, Mr. Keep considers a strip of a certain casting to have three dimensions, when considering its volume, and only two when considering its surface.

Would it not be wiser, before we settle upon a method for determining shrinkage, to ascertain the fact as to whether cast iron shrinks at all? It would be a good joke if, after going to such trouble, some one would prove that cast iron does not diminish in volume while passing from the liquid to the solid state. The writer laments the fact that he is not familiar with foundry work, but from general observations he is of the opinion that cast iron increases in volume in the passage from the liquid to the solid state, basing this opinion on these facts:

1st. That the density of liquid cast iron is greater than that of the same iron when solidified.

2d. That the volume of a body in the liquid state, whose elements are chemically combined, is smaller than when the elements are mechanically combined, as is the case in cast iron.

Mr. Thomas D. West.—The first point in Mr. Keep's paper on which I differ with him is where he says that "different castings poured from one ladle of iron will vary in quality, and such variations cannot be explained by chemical analysis, as the chemical composition may be the same in both. The difference seems to lie in a different crystalline structure." My experience is that chemical analysis can, in most cases, be depended upon to suggest the cause of differences in crystalline structure. If all conditions are the same, except size, we may generally expect that the denser castings have their carbon more in combination, since quick cooling, as in a small casting, prevents the separation of the carbon into the graphitic state. In shops doing both heavy and light work, the best opportunities are found to observe these peculiarities.

In my opinion there is a direct relation between the record of a test and the composition of the iron, and also a direct relation between the record of a test and the size of the casting, as well as its shape.

It is well known that I have taken issue with Mr. Keep on the subject of the best form of a test-bar. What I seek to

Digitized by Google

recommend would be a form and size convenient to mould, to handle, and to test, and one which should at the same time present on its fracture a crystalline structure nearly the same as that of pig metal, if re-melted and poured into pigs or bars of a similar size. What we all want to do is to find a standard form of bar which would give us at the same time a record of strength, contraction, and chill which we could express in percentages, or in degrees, as on the scale of a thermometer; but if this cannot be done, let us have a test which will record certain physical properties only, while other special properties would be ignored, and then let us understand the limitations of this second plan. In my opinion the ½-inch bar is too small for the first object, and a 2-inch or 4-inch bar is too large, which are my reasons for preferring the round 1-inch bar that I have advocated elsewhere.

It is gratifying to find the author agreeing with me that sulphur is to be absorbed from the fuel, although he does not agree fully with me. In many cases, strength in an iron, which could be secured by high percentage of sulphur, is better secured by low silicon, or a wise selection of a percentage of each. I have found in my experience that it is as essential to take account of the sulphur as of silicon, if not more so. A small change in the percentage of sulphur will change the physical character of an iron more than three to six times that same change in the silicon percentage.

Referring to Mr. Keep's table, descriptive of the making of his test-bars, in my opinion it was not advisable to have cast those bars by tappings. The iron should have been caught all in one ladle, and the bars for each series all poured from that one ladle. I agree fully with the author's statement that cast iron is very sensitive to any change in size or shape of a casting, and that, in melting, the heat of the cupola, the intensity of the blast, and the manner in which the melted metal is handled have a decided effect on the physical character of the casting.

My experience induces me to the belief that the depth of the chill in a test-bar is much affected by a few degrees difference of temperature in the iron when poured. The degree of fluidity in pouring makes a great difference in the depth of the chill. I think that Mr. Estrada is correct in his statement that in one of the series the chill is due to some other cause than that suggested by the author.

Digitized by Google

There has lately been advanced a theory that the specific gravity of castings poured on end is greater at the bottom than at the top, and that consequently test-bars should be cast flat. I have been making some experiments in this direction, and they do not bear out the statements of the theory. I took a gate six and a half feet long and three inches in diameter, and took a test piece six inches from the top, and another five feet from the top. The gate was parallel, so that, in turning up these specimens, the same amount of surface was removed from each. The specimens were machined of exact size, by Messrs. Warner and Swasey, and were then delivered to the laboratory of the Case School of Applied Science to be weighed. The figures of Professor Benjamin's report are as follows:

Weight of top end of gate in vacuum..... 1169.468 grams.
Weight of bottom end " " ..... 1167.239 "

Volume of top end of gate..... 165.722 cu. cent.
Volume of bottom end " ..... 165.768 "

$$\text{Density of top end of gate} = \frac{1169.468}{165.722} = 7.0568.$$

$$\text{Density of bottom end of gate} = \frac{1167.239}{165.768} = 7.0414.$$

Difference = .0154 only, and the plug from the upper end is the denser.

PROF. C. H. BENJAMIN.

The following is an extract from the Builders' Iron Foundry, presenting a series of tests on the specific gravity of vertical poured castings:

MR. THOS. D. WEST:

Dear Sir,—If you have a copy of our pamphlet "Our Share in Coast Defence," Part I., you will find an illustration on the third page showing the position of the casting from which the test specimens were ordinarily taken. We regret that we have not a copy of this pamphlet which we can send to you, as the edition is exhausted, but in a general way we can say that the lower test disk was taken about eleven feet from the bottom of the casting and two and a half feet from its upper end.

The majority of the tests showed the specific gravity of the muzzle specimens to be higher than the breech specimens, and also to be harder and of higher tensile strength, which is the reverse of what we had been led to expect. We enclose a list showing the average specific gravity of all the casts made for spe-

Digitized by Google

cific gravity of breech and muzzle specimens on the first six mortar castings and on the last six mortar castings made by us. For exact confirmation of all this we would refer you to the official reports of the Chief of Ordnance for 1890 and 1893.

Yours truly,

BUILDERS' IRON FOUNDRY.

R. A. ROBERTSON, *Treasurer*.

TESTS OF SPECIFIC GRAVITY OF FIRST AND LAST SIX MORTAR CASTINGS.

Number of heat.	Specific gravity of muzzle or top end of gun.	Specific gravity of breech or bottom end of gun.
78	7.288	7.2478
79	7 2436	7.2447
80	7.256	7.269
87	7.2934	7.2882
88	7.278	7.285
89	7.335	7.329
185	7.3263	7.3182
186	7.3325	7.3252
187	7.3404	7.345
188	7.3636	7.3336
189	7.349	7.340
190	7.3345	7.3267
	87.6908	87.6524
Average.....	7.3075	7.3043
	7.3024	7.3042

The above tests and figures appear to indicate that there is no condition which will cause practically any difference in the lower and upper end of vertically poured castings, in the sense which has been generally accepted.

Taking up now the subject of shrinkage, I repeat my previous statement that we cannot ignore the influence of sulphur in regulating the effect of silicon. An alteration of ten in the figures for per cent. of sulphur will, in my experience, change results more than a change of twenty to fifty in the amount of silicon.

Mr. E. H. Mumford.—I simply want to call attention to the fact that this paper leaves out the question of elasticity entirely, as that has to be considered later, the data not having yet come in, and we have left the three elements of strength, shrinkage, and chill. The strength has a certain amount of importance, and the chill a certain amount, but, in my opinion, the shrinkage is the matter of the greatest importance, and the plotted chart in Mr. Keep's paper, from actual tests of shrinkage, shows a very

Digitized by Google

valuable conclusion, well pictured in that diagram. If you will notice, the shrinkage of a ½-inch bar, due to changes of mixture, with 1 per cent. silicon, he chronicles at .183 shrinkage, with 3 per cent. at .135, a difference of .048 of an inch. Taking a 4 inch bar, the 1 per cent. silicon gives .102 shrinkage, the 3 per cent. silicon gives .045 shrinkage, a difference of .057 per cent. The range of shrinkage in the 4-inch and in the ½-inch varies very little, as the contour of the curves would show; the whole indicating that any one size of bar is as good as another for the relative test of shrinkage. While the gross shrinkage of a 4-inch bar is much less than the gross shrinkage of a ½-inch bar, the change, in either size of bar, of ½ of 1 per cent. in silicon produces almost equal effects. The irregularity in the chill tests I believe to be entirely due, as Mr. Keep suggests, to the washing of the chilling surface, because it is well known that if a chilling surface is heated by iron washing over it, or by other means, it will chill less deeply than if cold, and plans have even been adopted for keeping the chilling surfaces cool. Therefore I believe we shall have in the future more satisfactory results of chill tests than are given in the paper, and I believe the main value of the report, so far (this is only preliminary, as I understand), is in the proof as to shrinkage that one size of bar is as good as another for showing relative results.

Mr. Gus C. Henning.—I would like to say just a few words in regard to the value of the test-bars made for the purposes of the committee. The fact that all the bars, without exception, were perfect, is pretty good evidence that those bars were a good set of bars for those purposes. The fact that it is not stated in the paper, is because the bars had not all been tested. The fact that the metal was not all poured into a ladle and then stirred up, of course is one which would act against the quality of the iron, and in future tests that I have asked for we will probably do that. But that cannot always be avoided. When all the metal was melted down in the cupola and left there before it was drawn out, we tried to do that, and we found that we could not do it. If you had taken that metal and poured it from the big ladle into several other little ladles, we would not have known what the iron in the last ladle, or the second or third ladle, was. So we ran down certain heats, and then poured as fast as we could after tapping. When you handle such large masses of material, you have got to take other precautions than

Digitized by Google

simply casting twenty bars out of one ladle. But the fact that the bars were every one perfect shows that the method was not very far defective in obtaining such satisfactory bars.

Mr. West has brought up several points, and as soon as the committee's facts will appear, every one can satisfy himself whether those strictures made by Mr. West are based on what the committee has in hand, or whether they are simply given on belief.

Mr. Robertson's results, quoted by Mr. West, cannot be taken as they stand. When we make a comparison of specific gravity we must cast a pure article of one diameter throughout. As soon as we take into account the immense effect of the temperature of a great bulk of metal down at the breech of a gun, we do not know anything about the muzzle.

Mr. John Fritz.—While these experiments are peculiarly interesting, it does not strike me that they are exactly what the practical man wants.

Mr. Henning.—We are trying to find out what the practical man wants. We brought up this paper and simply started the discussion. If the gentlemen all send in their discussions in writing, we will know what they say.

Mr. Fritz.—When doctors disagree, the patients are in rather a bad fix. I have had some little experience in making castings —not a great deal, but there is one thing I know: when I go to make a casting, I do not go to any laboratory tests. I take a casting of the size the casting is going to be, and I take that casting and test from all the different parts of the casting, and in that way you get at a result for the purpose you want, and there is no other way that you can do it.

Mr. Cartwright.—I am another heretic, Mr. President.

Mr. W. F. Durfee.—In regard to the shape of test specimens I have just one word to say, and that is this: you may try as much as you can to get perfectly uniform conditions in your test specimen, but you won't be as likely, in my judgment, to get such conditions in a rectangular or square bar, as you will in a cylindrical or elliptical bar.

It is (or should be) a well-known fact that, in passing from a fluid to a solid condition, the molecules of most, if not all, metals arrange themselves in a crystalline form, perpendicular, or normal, to those surfaces at which solidification commences, and from which it proceeds to the interior of the mass. In the case of a square bar, the crystals arrange themselves perpendicular

Digitized by Google

to the sides of the bar, and as a consequence there will be developed two diagonal planes of weakness, as shown in Fig. 163, where the inner ends of these crystals meet and become more or less entangled. I say more or less entangled advisedly; for upon the union of these crystals in the interior of the mass along the planes of weakness before named depends in no small degree the strength of the bar. This being the case, it seems advisable to select a form of cross-section for cast test specimens in which all planes of weakness are eliminated. In a rectangular cross-section the crystals near the angles, in arranging themselves perpendicular to the cooling surfaces, will, as to their interior ends, become more or less perfectly entangled and united along the diagonal planes of weakness before named; but as the degree of perfection of this entanglement and union is, and cannot be otherwise than, purely accidental, the test specimens must, on a corresponding degree, show a want of uniformity in results. A circular cross-section is not liable to cause irregularities of the kind named, as it has no planes of weakness.

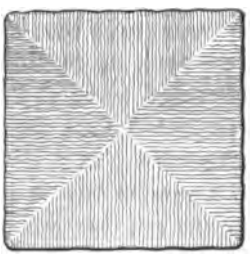

FIG. 163.

Mr. Wood.—Suppose you test the bar on its side, not in the way it is cast.

Mr. Durfee.—I don't know that that would make any difference. It is perfectly well known that the crystals of rectangular bars do arrange themselves in the way described.

Mr. John Platt.—I do not get up to speak as a foundry expert, but simply as a member of this Society who has some interest in the work done by the committees who take so much trouble to investigate subjects for us. It must not be forgotten that we have been discussing the work of a committee and not an individual. Now, as a society, we are interested in getting results which are going to be of use to us generally in the profession. And as an attack has been made on the methods adopted by this committee of the Society who are carrying on tests for us, in a certain way I think it is our duty to consider somewhat the attacks made here and see if there is any ground for them, and if the basis on which they are made is sufficiently encouraging to be looked into further. One of the principal grounds taken seems to be the shape and size of the test-bar, and whether it

Digitized by Google

is to be square or round. Experiments have been made which, if what we are told is true, and the test has been carried out properly, should have a great deal of bearing on the subject. In speaking of the square bar, I would like to ask a question of some of the theoretical men present. Reference has been made to the square bar, and the position which the molecules of the iron took in cooling, and the form which they took has been advanced as an objection to that form of bar for a test-bar. It was stated that they took up the arrangement shown in sketch (Fig. 165). Is it not a fact that the modulus of the cross-section of a square bar is practically two triangles, and that those triangles are the ones that come into play almost entirely in working out the results? In a round bar, which was supposed to be

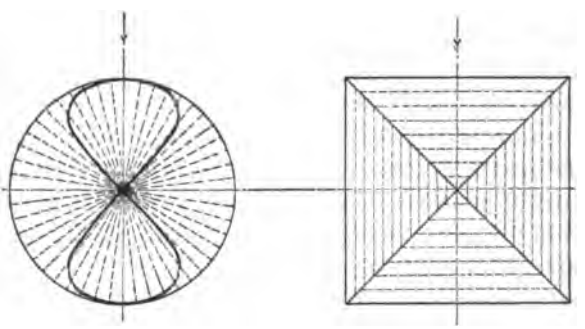

FIG. 164. FIG. 165.

so much better, the molecules were shown arranged radially. The section of the equivalent figure of a round bar, as shown in sketch (Fig. 164), is in that shape, and the molecules to my mind do not take up such an advantageous form. And then, with regard to the testing of these square bars, if I understood aright, there was a difference of four hundred pounds in some of these tests. What else could we expect? I speak not as a foundryman, but I have had something to do with testing in the laboratory, and to think of taking square bars promiscuously when you are attacking a method which is being worked out by the Society, and taking some that are cast with the face down, and some with the face up, and testing them at random, then comparing the results, and saying, we do not get uniform results, and therefore the system is wrong, without testing them with one side down or up; and in that connection Mr. West has stated elsewhere that he found a much denser portion at the bottom

Digitized by Google

of a round bar. In the last discussion he stated that, in a bar cast vertically, they found in testing that the metal was practically more dense at the top than at the bottom. If those are the results we have to figure from in condemning their methods, I think, perhaps, the committee are not working altogether on bad lines just at present.

Mr. Henning.—I should like to say that if, in the work of this committee, we had to deal with square bars cast flat, which vary among themselves to the extent of four hundred pounds, these having been observed as closely as possible, we will give up our work. Those are not test-bars. That is not a good foundryman's work. I mentioned yesterday that all the bars were perfect. Now, I wish to say that if we find that we cannot control the strength of a bar twelve inches long and one inch square within four hundred pounds, we cannot get at any results at all, and had better throw everything away. I maintain that if bars are not cast within such a wide limit, those bars are not worth anything.

Mr. Platt.—It speaks somewhat then for the work of the committee if we find that the tests they have made vary so little. Their experiments certainly must have a great deal of value if they get as good and uniform results.

Mr. Holloway.—I have listened to the discussion with a great deal of interest, and I am sure all who are here have listened with the same interest. But it seems to me that the work of the committee has been wholly in the direction of making tests in a certain line, and as nearly as they could under positive and fixed conditions. The results I am not entirely familiar with, but I am quite sure that the Society feels under very great obligation to them for the great deal of labor and interest they have taken in producing these results. As Mr. Henning has said, it is very proper and right, if you are undertaking to test anything, you have got to test the same thing all the time, and under the same conditions, and they have done so as far as they possibly could, and the results they bring before the Society are the results obtained under those particular conditions; and for these results, and for the labors they have gone through, they are certainly entitled to the thanks of the Society. On the other hand, Mr. West has started on his own account to make some tests in regard to the strength of iron, and in order to satisfy himself of the differences in iron and iron test-bars made under

Digitized by Google

different conditions, he has made a great variety of tests in his way; and he comes here and tells us, very truthfully and very properly, that bars cast in some particular method, and of the same iron, are not near as strong as bars cast in some other method; so that, while his experiments are very useful and very good, there can be no fair comparison made between the two. I think that is simply the situation. The committee have gone on in one particular line, and have made their tests in that line. Mr. West has gone on another line, to test for himself what results will grow out of making bars under varying conditions. There has also come into this discussion the question of making castings. That is valuable, because that is what this sort of a gathering is for; it is to bring out the practical experience of men engaged in making castings, and the making of test-bars and tests are only valuable as they help us to make good castings. I would think there is no need of carrying the discussion further on these particular lines, because each is working on a different line altogether, and there is no satisfactory comparison that can be made between the two.

Mr. Kent.—The practical founder has claimed for a thousand years, more or less, that the shrinkage of cast iron is one-eighth of an inch to the foot. Mr. Keep has put in his paper a diagram showing that the shrinkage of iron is not one-eighth of an inch to the foot, but something else; and if we want to know what the shrinkage of iron is, we will have to put a microscope on his diagram and analyze the iron for silicon. Now I am going to try to prove from Mr. Keep's own diagram that the shrinkage of cast iron is one-eighth of an inch to the foot, or just what the practical man says it is.

Mr. Fritz.—I am rather a practical man, and I take exception to that. The shrinkage is not one-eighth of an inch.

Mr. Kent.—In the first place, it appears that the average of the whole diagram is just about .125, or one-eighth inch per foot. Let us analyze the diagram in detail. We find that the ratio of cubic inches of contents, divided by square inches of cooling surface, is very small when we have a small, thin piece. Now, the practical founder, if he had to make a very small casting or a very thin casting, will use a very open-grained iron, high in silicon; and, according to the diagram, if he will put 3 per cent. of silicon in that small casting he will get a shrinkage of one-eighth of an inch to the foot. If, like Mr. Fritz, he wants to

Digitized by Google

make a big casting, equivalent to a bar 4 inches square, he will use a fine-grained iron, which will come down to 1 per cent. of silicon. If he wants a casting intermediate between the two, if he puts in 2 per cent. of silicon he will get the same shrinkage. So the practical founder, without knowing anything about silicon, but knowing about the grades of iron sold in the market, will put in a very close-grained iron, that is, one low in silicon, when he wants to make a very large casting, and, according to the diagram, he will get his shrinkage of one-eighth of an inch to the foot. When called on to make thin castings he will buy the high-silicon iron, and according to Mr. Keep's diagram he will again get the shrinkage one-eighth of an inch to the foot. So that my proposition is that, according to Mr. Keep's diagram, what the practical man uses is that percentage of silicon which makes the shrinkage one-eighth of an inch to the foot.

Mr. Hawkins.—I would like to say a word as to the inutility of this diagram to determine the shrinkage of iron. As I understand it, from cursorily going over the part relating to it, all other conditions being equal, it simply defines the variation in shrinkage occasioned by the variation in the amount of silicon in the iron. The author says: "It also tells its story in a definite way, and does not require the trained judgment of an expert to make it of practical value. Whatever may be due to influences outside of the silicon contained in the casting, an increase or decrease of silicon will lower or raise the shrinkage." Now, while the table may be available as simply applicable to the knowledge of what effect silicon has upon the shrinkage, it is of very little use to enable us to determine in a particular piece of cast iron what the shrinkage is going to be. But what I wanted to get at was this: I have not heard in this discussion, outside of Mr. West's brief reference to it, that one of the by no means insignificant things which does affect the shrinkage of a casting is the temperature at which the iron is poured. What I contend for is that the temperature at which the iron is put into the mould will determine, to an extent necessary to be taken into account, the amount of shrinkage. We all have seen solid cast iron float when put upon the surface of molten cast iron, and we conclude that its maximum density is, while in liquid form, somewhere near the point of solidification. We also know that the shrinkage of steel castings is something over double that of cast irons, and I presume, in some degree, at least, from the fact that steel castings are poured at a very much

Digitized by Google

higher temperature. Now it occurs to me, that, as a guide for determining the amount of shrinkage of castings, and important factor is left out if we disregard the effect of the temperature at which it is poured. While I may not be able to explain just why castings in many cases have less shrinkage as they are poured cooler, I do know that to be a fact, from observation; but I do not know that this is invariably the case, or that the reverse may not obtain under some conditions. It seems, however, not improbably connected with the explanation given, to the effect that the crystalline structure of the cooled, solidified iron is different under different rates of cooling. We may readily see that a casting of considerable volume, if poured very hot, may have a longer time elapse between the periods when its peripheral parts and the more central bulk assume the solid form, than if poured cooler. As the solidification of the outer or more superficial parts to some small depth will not, probably, absolutely control its final dimensions, is it not probable that a variation in the time between the solidification of the superficies and the subsequent complete solidification of the whole may vary this process of crystallization? Since a variation in the rate of cooling, as a whole, does this very thing, the difference in the temperature of pouring makes a difference in the general rate of cooling after the superficial parts have solidified.

It is generally understood that crystallization takes place at a somewhat critical period, where the passage of a body from the liquid to the solid occurs, and that the slower this point is arrived at, the larger are the resulting crystals. That the arrangement of the crystals among one another may vary with the rate of cooling, as the paper presents it, may be, and probably is, true; but it seems probable, to say the least, that the size of the crystals (which is determined at the critical point of solidification, and is not varied after complete solidification by the further cooling) determines to much greater degree the final volume of the solid when cold than their subsequent rearrangement while cooling in the solid crystalline state.

If the superficial parts thus solidify, in one case incasing a hotter body of iron than in another, it seems clear that the whole body of the casting must shrink to a different degree, after the solidification of the exterior, than when this exterior solidification takes place while incasing a cooler liquid body.

This may not be a true explanation of the phenomena, and

Digitized by Google

is, indeed, opposed to the explanation of "the relation of shrinkage to the size of casting" given in the paper; it is, however, a fact which any foundryman may satisfy himself of, that, everything else equal, any considerable variation in the temperature at which a casting is poured will vary the amount of shrinkage to a degree not to be disregarded when accuracy is sought; and generally, the hotter the pouring, the greater the shrinkage.

Mr. Henning.—I wish to refer to these diagrams, which Mr. Hawkins seems to think do not bear that out. If you will look on Chart XIV., page 559, in that chart are six series of tests, each series consisting of a great many tests, which are plotted. You will find the ratio of cubic inches of contents to square inches of cooling surface at the top of the chart. That shows you that account is taken of the temperature, because, the larger the ratio of contents to cooling surface the less rapidly will that material cool. You see that increase from zero up to one. In the other column are given the shrinkages in inches per foot of length. There you will find that, in these test-pieces, the larger they get the less the shrinkage will be. The silicon found by chemical analysis in each series is given at the beginning and at the end of the line. Now, that chart shows distinctly that there is a certain relation between temperature in the flask and the shrinkage in the material poured. In the first case—Silicon 91, Series 7, the heavy black line on top—it is just as plain as in the last one, although the irons are quite different; the shrinkage decreases as the size of the test-piece increases. That shows that the shrinkage is controlled by something other than the composition, not requiring any other change in the composition, though there may be other differences. But in every case it will be noticed that the shrinkage is less per foot as the casting increases in size. The bars were all cast at the same time, out of one ladle, as nearly as possible up to a certain point. Then another ladleful was cast, and so on, because we could not hold all the iron in one ladle. Now turn to the previous chart on page 558, and you will find the same thing to hold good on other irons. With all these facts before Mr. Keep, and thousands of others in the regular routine work of casting, he has plotted those curves on page 561. Those curves, of course, are abstract, theoretical. They do not take into account conditions which may disturb the effect. They do not take into account accidental changes due to fuel that comes into the cupola. They do not take into

Digitized by Google

account the amount of silicon that was burned out in the cupola while melting. But the general law laid down in those smooth curves is found to hold good in every case. Castings are made under similar conditions. If conditions of casting are varied in the slightest the castings will be altogether different, and cannot be compared with the others, but take a broad curve and cover these many curves on pages 558 and 559, and you will find that they essentially agree with these curves on page 561. The variations in those lines are produced by conditions that could not be controlled in the foundry in every case. As experience is multiplied in casting the same bars, these errors will be eliminated; some of these differences here may be corrected, as more experiments are made, but in every case you will find that the shrinkage decreases with the size of the casting, and that the shrinkage decreases with the amount of silicon in it, provided all the conditions under which those pieces have been made were identical. You must never forget that. If we had had larger castings, more than 4 by 4, we might have shown more points at the lower ends of these curves, and there might be other facts which we have not been able to determine. Should we be able to get at definite conclusions with regard to smaller bars, which is a task of infinite pains, we hope to be able to carry these curves out further, so that we can, with one or two actual trials of a larger casting, determine whether our curves will hold good for larger castings as well; by interpolation we can get approximate values of shrinkage for any size of casting, provided that the casting was made under the same condition as the little casting, which every foundryman makes for himself. You see that any one iron has a great many percentages of shrinkage, which is due entirely to mechanical causes, irrespective of the chemical composition.

I would like further to say that one of the conditions under which these test-pieces are prepared is that the temperature must be the same at the time of pouring. We do take it into consideration, inasmuch as we get our test-pieces cast as nearly as possible at the time a good founder decides that it is at the same temperature. We admit that the work may be incorrect, for that reason. But you will find that such errors eliminate themselves in a great series of experiments. If we, for instance, make a great many test-pieces all of the same kind, under the same conditions, and everything is alike except that we find that our results are different, then we go back and find out what the cause was.

Digitized by Google

But the attempt must be made to get your primary conditions identical. If you do not do that you cannot get the same results, and you cannot get comparative results. If any one will tell us how to measure the temperature of the molten metal in the ladle, why, we will do it; but so far no one has been able to determine that before the iron is cold. When your experience indicates that the temperature is the same it was during previous casts, then go ahead and make your castings. The grain depends very largely upon the temperature. If you anneal the castings the grain will be altogether different. If you make a small casting you will get a certain grain of one iron. If you cast six pieces of different sizes the grain will vary in each one of them, although they were poured in the same heat, the same flask, and other identical conditions. If these six pieces be poured in different flasks, all from one ladle, the grain will again be different; in the former case the smaller pieces being cast with the larger ones, these will change the grain, because of the temperature effect. Pour a bar of each given size by itself, under the same conditions, the temperature of pouring being exactly the same, in order to find what that little piece or large piece will do under those conditions. In a large piece you will find perfect crystals. Mr. Keep has some, and I am sorry he did not bring them here. But he has perfect crystals of cast iron. Where the difficulty comes in in finding out anything about cast iron, is this, it is not an alloy, and it is not a chemical combination. It is simply a mixture of various compounds and elements. You can, under the microscope, pick out the graphitic carbon between the particles of crystals or grains of the other materials. They are all bounded by certain separate chemical compounds, which can only be shown under the microscope, by treatment such as that of Prof. A. Martens, in a most beautiful manner, by etching and polishing, and he has identified materials by merely knowing how they look under the microscope under certain treatment. Steels can be identified the same way. But those appearances under the microscope are determined mainly by temperature influences, because there can be chemical changes in metal that has been cast, and which contains carbon or any materials that can be dissolved by iron as a solvent. Sulphur, silicon, chromium, and manganese are dissolved in iron just like sugar is in water. Subject a piece of iron to heat, under conditions under which the iron will absorb more or less of certain elements, and if there are a number of

Digitized by Google

elements in the castings at the same time, some will be dissolved more readily than others. Remove these, and then the others that were not absorbed will be absorbed in the same way. But by means of temperature, whether by annealing or slow cooling in large castings, the character of the mixture, whatever it is, is changed, and if we can control temperature we can control results.

Mr. Cartwright.—The temperature, you say, Mr. Henning, has all to do with the tapping, etc.

Mr. Henning.—No; I say, take one kind of iron, and if it be subjected to different temperatures, you will get altogether different results, according to these temperatures. First, you pour from the first of the heat, where the cupola gives one mixture. Then you pour from the middle of the heat, which is another mixture. Then you pour the tail end of the melt. We say, take the metal for test-bars from the middle of the heat always, and then you will get as nearly identical results as you can expect to get, if subjected to the same temperatures.

Mr. Hawkins.—I merely want to insist upon the point I have made that has not been touched upon in the paper, that the temperature at which castings are poured varies the amount of shrinkage of the castings to an extent not to be ignored, and to a greater extent, perhaps, than some of the conditions named here. We may assume that if you have a number of castings of uniform dimensions, to cast, if all the conditions are observed which are given in the paper, you will have uniform shrinkage, provided you pour them at the same temperature. If you do not pour them at the same temperature you will not have the same shrinkage, though you observe all those conditions.

Mr. Fritz.—I agree with Mr. Keep in regard to the sulphur. I do not want it in metal I use if I can get it out.

Mr. Holloway.—Mr. West's objection to sulphur is, as I know, not a recent one. At one time he was the foreman of an establishment in which I had something to say sometimes, and occasionally, when we would get some castings that were rather hard, and there was some objection made in the machine shop to any lot of castings that were made, I would call Mr. West out and tell him about those hard castings, and complain about them. "Well," he would say, "it is the confounded sulphur in the last lot of coke we got."

Mr. Cartwright.—It is not a month ago that I was called to

Digitized by Google

a foundry. The proprietor said, "Cartwright, come down and help us with our foundry." "What have you been doing?" I asked—"buying new iron?" "No." "New coke?" "No." "What is the reason?" "I don't know. That is what I have come to you for." I went down and said to the man in charge of the cupola, "Let me see what you are getting for your fuel." I then went to the coke bin. There was a lot of gas coke that he had bought cheap, to dry cores, and, unfortunately, the partition between the Connellsville coke and the gas coke had broken, and he was trying to melt iron with gas coke rich in sulphur.

Mr. Henning.—The committee is studying for one particular object. In fact, the only thing that the committee now has in hand is to see whether a method, and the size of bar which will answer generally, can be determined, or which will give more uniform results. We do not care what strength the iron gives in the bar. We want simply to find a method for producing test-bars of the best shape to give us uniform or reliable results. So far as we have found out, we do not know anything about it.

*Mr. W. J. Keep.**—The experiments recorded in this paper were each conducted in strict accordance with ordinary foundry practice, and were subject to the varying conditions which at all times surround foundry operations, and from which it is impossible to escape.

The influence of these conditions is described, to explain what might otherwise be ascribed to change in chemical composition.

For any recommendation as to size or manipulation of a test-bar, we must show why methods in general use are not satisfactory, and why in the past so little has been learned regarding the effect of variations in the chemical composition of cast iron.

My discovery in 1885, that variations in the shrinkage would indicate the effect of the chemical composition of cast iron, furnished a means for determining the change in physical character produced by the presence of carbon, silicon, sulphur, phosphorus, or manganese, and the present paper treats of shrinkage because, by it, a foundry mixture can be made to produce satisfactory castings.

In the past, attention has been directed entirely to the strength and elasticity of cast iron, and the size of test-piece has been

* Author's closure, under the Rules.

Digitized by Google

1 square inch, or 1 by 2 inches, rarely larger or smaller. This part of the subject will be considered at the June meeting.

Referring to the description of the first twelve series, the chilling of the slag during the first day, while the blast was off, had no effect upon the melting of the iron, for the cupola was in each case hot before the next iron was charged. The second day there was no chilling of slag, as the wind was continuous.

The twelve series are more valuable because of these variable conditions. The influence of the temperature obtained in a freshly lined cupola is shown in Series 1, 6, and 10. The contrast between iron melted in a cupola not fully heated, as Series 7, and when fully heated, as Series 9, is shown by the ½-inch square bars of these series, which happen to contain equal percentages of silicon.

The fact that the silicon is not equally diffused in the different test-bars in these series shows that high silicon pig (10.87 per cent.) will not produce castings with as uniform silicon as when iron with a lower percentage is used. Series 13, 14, and 15 received their silicon from silicon pig containing about 5 per cent. silicon, and the silicon is quite evenly diffused. In Series 16 and 1 and 7 the pig iron contained the required silicon, and it is evenly diffused.

I have distinctly stated that the iron was not taken from the cupola in different tappings, but was all drawn out at once into enough ladles to pour all the moulds as nearly simultaneously as possible.

At this writing nearly all bars have been tested, and the record is that each bar is sound.

The reason for the superior value of these series is that results and tendencies, which are alike in all of the series, can be safely taken as of general application to all cast iron. In drawing conclusions only such general tendencies are considered.

Much of the discussion of this paper has consisted in statements of opinions differing from those of the paper, but unsupported by experimental data, while each conclusion in the paper was founded on experiment.

The statement that it is a matter of foundry experience that iron poured hot will shrink more than if poured from the same iron mixture at a lower temperature, might at first glance appear true.

The fact is, however, that shrinkage cannot begin until a

Digitized by Google

rigid shell is formed, and with a given iron mixture, with castings of the same size, the temperature at which the shell becomes rigid must be the same, and the enclosed fluid metal must be of the same temperature in both.

If one mould is filled with hotter metal than the other, the superfluous heat must be imparted to the mould, with the result that, after shrinkage begins, the casting that was poured hot will cool more slowly, and must, therefore, shrink less than the one that was poured colder; but the difference would probably be so slight that it could not be measured. The following experiments prove that practically there is no difference:

All from one Ladle.	Shrinkage of ¼-inch square Test-bars in Inches per foot.									
	1st.	From one ladle.	2d.	3d.	4th.	From one ladle.			5th.	6th.
Poured on reaching floor.	.128	Poured at once.	.127	.125	.160	Poured at once.			.125	.158
" 1 min. later.	.128	" ½ min. later.	.126	.128	.162	" 1½ min. later.			.123	.158
" 1 " "	.128	" ¾ " "	.127	.131	.160	" 1¾ " "			.122	.158
" ½ " "	.128	" ¼ " "	.127	.128		" 1¼ " "				.157

The 1st, 2d, 3d, and 4th were from regular cupola mixtures; the 5th was a crucible mixture of the pig irons used in 1st, 2d, and 3d; the 6th was of one brand of pig iron melted in a crucible.

In the sixteen series described in this paper it was impossible that the temperature of the iron, as it entered each mould, should have been exactly the same, for they were made in different cupolas at different times; but the general laws which govern shrinkage are apparent in all, and correspond to the variation in the percentage of silicon, modified by the conditions which have been mentioned.

The question has been raised whether cast iron expands at the instant of solidification. There is no such instant. Each crystal forms alone and shrinks on itself, and even if it did expand, it is not until such crystals are numerous enough to form a rigid shell that the casting can shrink, and any expansion of each crystal could not affect the whole casting. Cold cast iron floats upon fluid metal because it has not become wetted by the fluid iron. The upward current along the sides of a foundry ladle is caused by gas and steam from the lining, and the current ceases or even reverses when the next iron is caught in the hot ladle.

Digitized by Google

DCXXXII.*

TOPICAL DISCUSSIONS AND INTERCHANGE OF DATA.

No. 632—120.

ARE there certain general principles underlying the proper connection of steam boilers and engines in a power plant?

Mr. Theodore F. Scheffler.—Too much cannot be written about the design or construction of boiler and engine plants, either for electric light stations, or for power plants, or, in fact, for any kind of a power station. Considerable space may be saved by leaving everything to the manufacturers, as well as economy secured in pipe connection. There certainly is a method for setting the engine connected to the boiler so that the best results may be obtained. For small plants, where there is but one boiler and engine, it is customary to set the engine about 12 feet to 14 feet from the boiler, and put an 8-inch division wall between the boiler and engine rooms, so as to keep all dust accumulating from ashes out of the engine-room. For the best results, engines should be set longitudinally with the boiler so that direct pipe connections can be made. This is also, in the writer's opinion, the best method on account of the expansion of the steam-pipe. In plants where there are three or four engines to be connected to a battery of boilers, and the engines are placed either directly in the rear, or in front of the boiler fire-room, there will be considerable waste of steam-pipe, which will amount to quite an item on account of the steam-pipe being large in diameter to accommodate the volume of steam from the boilers to the engine.

For the purpose of having some fixed basis to work from, the writer has taken for an ideal plant the following specifications of boilers and engines, and the necessary items to make a complete and modern steam plant.

---

* Presented at the New York meeting (December, 1894) of the American Society of Mechanical Engineers, and forming part of Volume XVI. of the *Transactions.*

Digitized by Google

BOILERS.

Four 66 inches × 16 feet horizontal tubular boilers, rated at 100 H.P. each, and to be set in one battery with full arch fronts, and all necessary fittings, such as safety-valve, steam-gauge, and siphon, water-gauge with stand-pipe fitted to boiler, three gauge-cocks for each boiler, blow-off valve, two check-valves, two stop-valves for feed-pipe, main gate valve for steam outlet, rocking grates, grate bearers, stack-plate, rear arch bars, and rear ash door and frame. These fittings go with each boiler. One boiler cleaner for all four boilers.

ENGINES.

Four 13 inches × 12 inches non-condensing, high-speed automatic engines, to develop 90 I.H.P. each; diameter of steam-pipe, 4½ inches; diameter of exhaust, 5 inches; diameter of pulley, 54 inches; face of pulleys, 12½ inches, with complete set of fixtures, such as throttle-valve, large size sight-feed lubricator, full set of sight-feed oil cups, and automatic oiling devices for crank pin and crosshead pin, wrenches, crank shield, cylinder cock-drip connection for steam-chest, foundation bolts, and one 4½-inch steam-separator for each engine; feed-water heater to be 42 inches diameter with 100 2-inch tubes 60 inches long. Engines to set 9 feet, centre to centre, and longitudinally with boiler. Pump required for this plant, one 400-H.P. pump, or a pump capable of delivering 3,000 gallons per hour, and all necessary pipe connections. Each boiler to have one injector of 100 H.P. capacity, or equivalent to forcing 800 gallons of water per hour into boiler, and all necessary fittings.

In a plant of this size it is customary to use a feed-water reservoir tank. Where there is no city water pressure the tank is supplied with water by a pump, the tank being suspended above the boilers, so that the water will flow by gravity to the boiler feed-pump, thereby keeping the pump valves flooded with water. One exhaust-head should be connected to the main exhaust-pipe after leaving the feed-water heater.

Probably right here would be the proper place to say a few words in connection with the engine foundations. The depth of engine foundation should be at least 6 feet, unless there is a good rock bottom found before reaching this depth, so that the

Digitized by Google

engine anchor-bolts may be anchored directly into the rock; otherwise, if there is no such rock to anchor to, and the above depth has not been made, there will not be enough weight to the foundation to hold the engine down. The writer is well aware of the fact that there are engines on the market to-day where great care and attention has been given thoroughly to counterbalance the engine, so that the engine will run steadily and smoothly, set upon four pins, and will not jar or shake off the pins, the engine not being bolted to the foundation. The above is all right so far as it goes, but will not answer for large engines, and especially when the engine is very heavily loaded. The length of the foundation on the shaft end of the bed, measured from the centre of the shaft to the end of the foundation, should be equal to the length of the foundation measured from the cylinder end of the bed to the centre of the shaft. The correct proportion for this length of foundation is about seven and one-half times the stroke of the engine.

In a great many cases this length of foundation on the shaft end of bed has been very much diminished. There is no better place to throw in brick on an engine foundation than on the shaft end; here is where the weight is required.

The above dimensions which have been given will make the ends of the foundation equally divided on each side of the centre line of the shaft, making the centre of the shaft in the centre of the apex of the foundation. The width of the foundation at the bottom should be equal to eight strokes of the engine. In this case, the stroke of the engine is 12 inches, multiplied by 8 inches, which would equal 96 inches. The number of brick which would be required for this foundation is 7,500.

Having found the proper dimensions of the engine foundations, it will be as well to give thought to the relative proportions of the boiler foundation and settings. The writer has found by experience that 3 feet deep will be sufficient for this size of boiler, below the floor line. A good, hard sandstone will give good results when brick is not used, which some people prefer. The width of the foundation should be 6 inches more on the floor line than the boiler side walls, which in this case should be 24 inches wide. There has been considerable argument about the best height from the floor line to the fire door opening; 22 to 24 inches is a very satisfactory height, but 30 inches is considered much more satisfactory and better adapted

Digitized by Google

to the ordinary fireman. This height has been obtained for these boilers by raising the bottom of the fire fronts 6 inches above the floor line, as the height of opening is but 24 inches in the casting. This method of raising the front has proved very satisfactory wherever it has been adopted. Another point to be considered on these boilers, is the height from the top of the bridge wall to the under side of the boiler shell. The height in this case is 12 inches, and this gives an area between the top of the bridge wall and the bottom side of the boiler shell of 1,550 square inches, which is equivalent to double the area of the boiler tubes. For the best results in combustion and efficiency, this height has proved to be very satisfactory. The bridge wall should be made horizontal on top. Some manufacturers recommend the top of the bridge wall to follow the curve of the under side of the boiler shell with the necessary area between the bridge wall and the boiler. Another good point for consideration is the distance from the top of the grates to the bottom of the boiler shell; in this particular case it is 26 inches. This height has proved to be very satisfactory. Of course, there is a wide range of opinion on the height; some manufacturers prefer but 23 to 28 inches, and some even prefer 30 inches. The writer has found this height to suit in almost every possible case. The height given is about the average, and will evaporate more water than if the height was 30 inches.

The boilers and engines having been set up on their foundations, the next point in view to consider is the main steam pipe and fittings. See Fig. 168 for illustration of the main steam pipe. We will first consider the correct diameter of the main steam pipe. As we have in this case four steam outlets from the four boilers, one from each of the boilers, and as the commercial diameter of each pipe is 5 inches, we shall require a main steam pipe with an area equal to four times the area of the 5-inch pipe. The area of a 5-inch pipe is 19.63 square inches. This multiplied by 4 gives 78.52, which is equivalent to a pipe 10 inches in diameter. The pipe is constructed on the telescopic method, that is, the diameter of the pipe from the first boiler to the second boiler is 5-inches; from second boiler to third boiler 7 inches; from third boiler to fourth and last boiler 9 inches; and from the last boiler to the engines, the diameter is 10 inches. This pipe will carry all the steam which the four boilers can supply, and with a minimum resist-

Digitized by Google

ance. Observing the end elevation (Fig. 169), the main steam pipe is at the extreme height. This arrangement allows of all condensed water flowing back towards the boilers.

There should be a drip connection placed on the gate valve just above the valve seat, so that condensed water may be drained off. By this arrangement of drip-pipe, considerable water may be saved from getting into the engines. It will also prove to be economical and saving of steam from the boiler

FIG. 168.

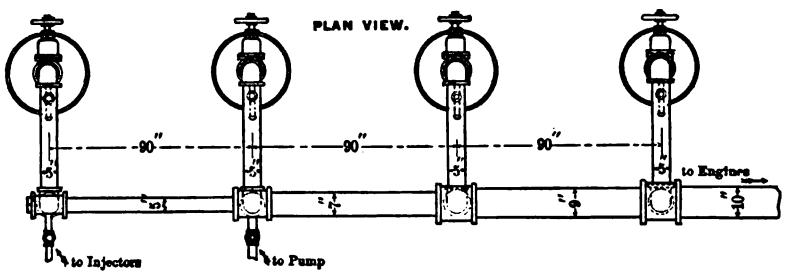

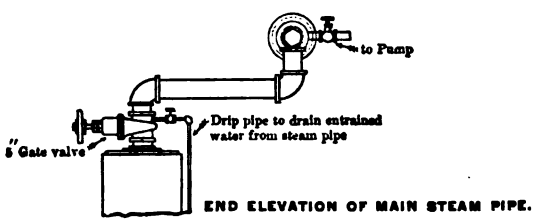

FIG. 169.

after the gate valve is opened; for, if this accumulating water is not let out at the boiler after any one of them has been shut down, the steam will condense very rapidly. Of course, this is only a small saving of steam.

The main steam pipe is located 36 inches from the centre of the dome. This is done so that when the steam pipe expands or contracts, it will not make any strain on the screwed connection at the point marked *A*, but will naturally swing from the centre of the dome, the centre of the dome becoming the fulcrum of the main steam pipe. The steam pipe connection for the engines are made in the following manner. (Fig. 170). First, a short piece of 4½-inch pipe is connected to the main steam pipe and then to the steam separator. The steam taking a spiral course inside the separator, causes the water to be thrown by centrifugal force against the outer walls, while the dry steam

Digitized by Google

goes through the small holes to the centre of the pipe. When it is not convenient to pipe up the separator as shown, steam may be taken into the separator at *A*. For sectional view of separator, see Fig. 171.

The separator should be located as close as possible to the

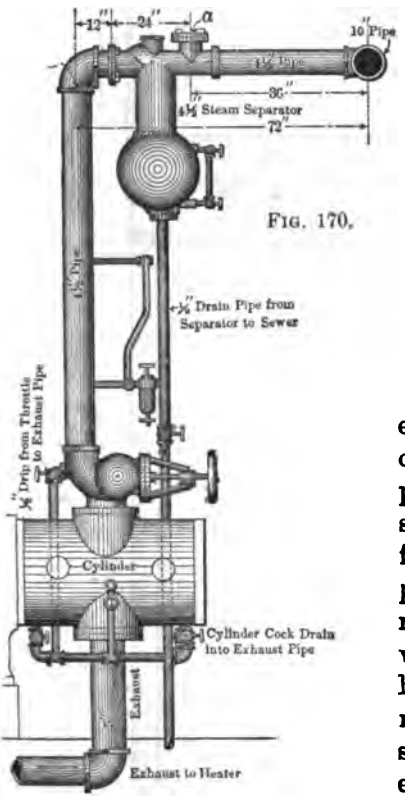

FIG. 170.

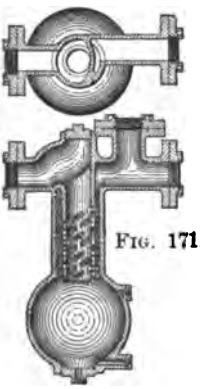

FIG. 171.

engine, so that nothing but clean, dry steam will be supplied to the engine. The main steam pipe is located 72 inches from the 4½-inch vertical steam pipe, which is connected directly to the engine throttle valve. This allows the 4½-inch horizontal steam pipe connected to the separator to swing from the elbow *B* when expansion or contraction takes place. Fig. 170 also shows the exhaust pipe connected to the cylinder; for continuation of exhaust pipe, connected to feed-water heater, see Fig. 172.

The best and usually the most convenient place to locate a feed-water heater is on top of the boiler side walls, placed at right angles to the boiler and set horizontally, the heater being supported at each end by a cast-iron leg or bracket, and each bracket anchored into the boiler side walls by anchor bolts.

This method of locating the heater has been, as described above, placed on several large boiler settings which the writer

Digitized by Google

has designed. Any person who is in any way familiar with boiler settings knows how hot it is over the top of boilers, and can

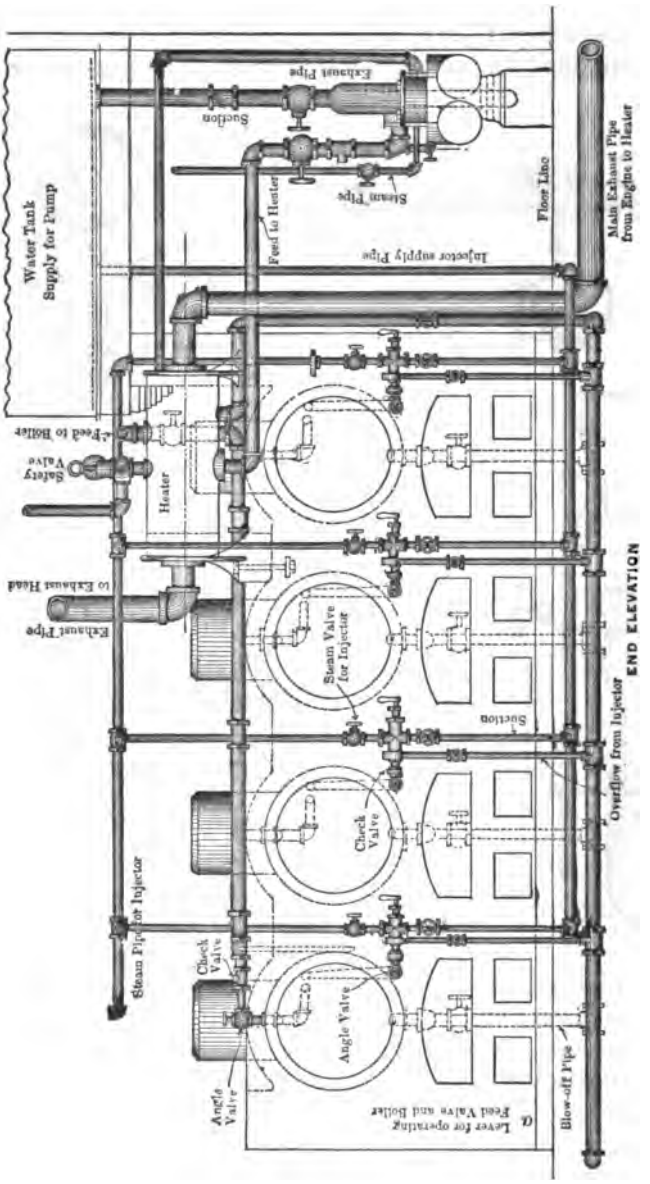

FIG. 172. END ELEVATION

readily see the advantage of locating the feed-water heater above the boilers. From 5° to 10° of additional heat will thus be

Digitized by Google

obtained for the feed water over that supplied, if the heater is set up, as is common practice. To set the heater on top of the boiler will cost a little more, but it will soon pay for itself by being economical.

The injector should have a separate feed-water pipe, on entering the boiler, so that in case any accident should happen to the pump pipe connections, or repairs should have to be made on the pump or to any of the connections, there will be no loss of time by having to draw off the steam from any of the boilers, in order to make the necessary repairs. If necessary, by closing the main feed-water pipe valve connected to the pump line of pipe, after the water is forced through the heater, and by closing the feed pipe valve over each boiler, the whole line of pump pipe connections may be disconnected, and the boilers fed with the injectors. A check valve should be placed over each boiler for the feed pipe, and also between the pump and heater. This will keep all pressure away from the pump and will be beneficial in case anything should happen to the boiler checks. The blow-off from the heater is connected to the main blow-off pipe, as well as the overflow from the injectors, and the discharge may be connected to any convenient point which will be the nearest at hand, or may be carried to the sewer. To operate the blow-off on the boiler or heater, the globe valve on the injector pipe should be closed. The injectors are supplied with water from the water tanks overhead; this will give a constant supply of water under a head of water at the injector.

The main steam supply is connected to the main line of steam pipe leading to the engines. The idea of doing this, is in case anything should happen so that any one or two of the boilers should be off duty, the supply of steam would be constant, in taking steam from the main line of steam pipe. A good way to connect the blow-off pipe to the bottom of the boiler shell and keep the pipe intact from burning out, is to build a small wall of fire-brick, about 9 inches thick, and lay the pipe in the centre of the brick. This wall will not diminish the area of the combustion chamber enough to destroy any of the draught. For illustration of this pipe connected to boiler, see Fig. 173.

The exhaust pipes leading from the engines to the main exhaust pipe should be constructed so that there would be a minimum amount of back-pressure. To do this satisfactorily and with the best results, a lateral branch "*Y*" connection should be

Digitized by Google

made where the pipe meets the main exhaust pipe. For an illustration of this design, see Fig. 174. A valve should be placed on the pipe leading to the main exhaust pipe, so that in case any one of the engines is stopped for repairs, the exhaust steam from the other engines would not back up into the steam-chest, in case the valve on the engine was disconnected from the engine. The "*Y*" connection also does away with the short and sharp angle connection and makes a freer passage for the steam.

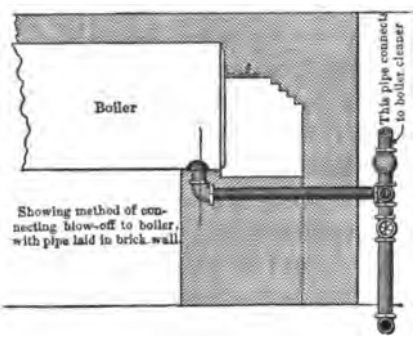

FIG. 173.

Referring to Fig. 175, we have a plan view of the pump feed-pipe connections with fittings, also the injector connected to the boiler. It will be observed that the injector pipe runs nearly the whole length of the boiler and toward the rear before discharging the water directly into the boiler. The advantage of this is apparent. The feed water becomes well heated before discharging into the boiler, and its chilling action on the shell is greatly lessened. There has been

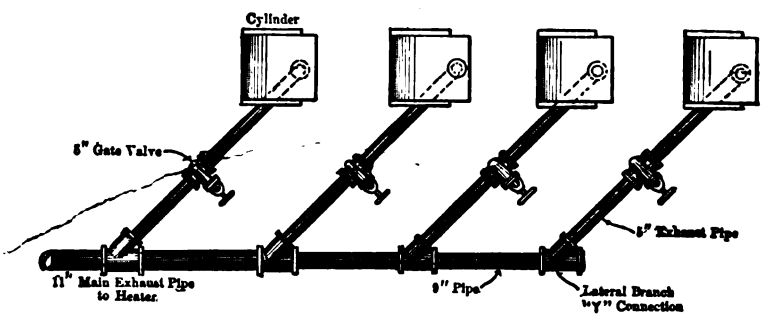

FIG. 174.

considerable discussion about where the feed water should enter the boiler, and the writer believes that this method is freer from objection than any other which could be selected. The pump feed enters the boiler at one-quarter of the whole length of boiler, at the rear, and the pipe is kept as close as possible to

Digitized by Google

the boiler shell, so that there will be room enough for a man between the pipe and the top of the tubes. The pipe then continues ahead about eight feet and then turns towards the boiler shell on the side, and then turns and comes back where it started from and discharges downwards. Some persons may say there are too many turns employed in this method, but the feed-pipe is made much larger after it enters the boiler to reduce the resistance caused by friction to a minimum. Fig. 175 also shows a plan of the feed-water heater.

Figures 176 and 177 illustrate the method for connecting the boiler cleaner to the four boilers. The reservoir for receiving

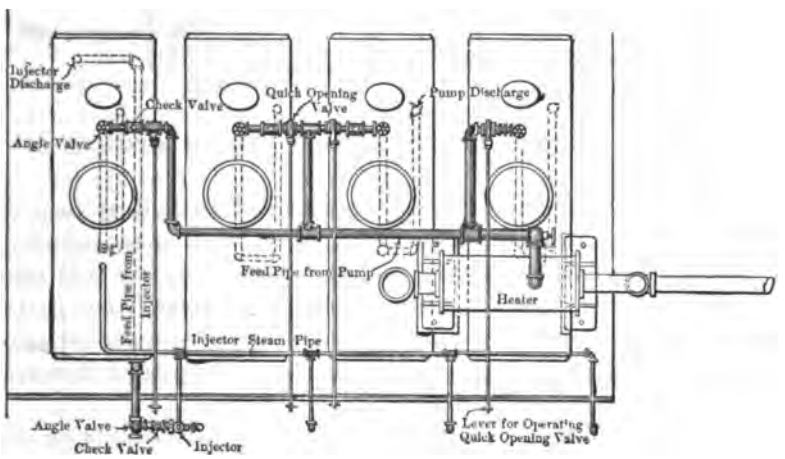

FIG. 175.

all of the sediment collected from the boilers is located centrally between the four boilers, in the rear. The action of the boiler cleaner is here described. As the water boils and circulates towards the top and rear of the boiler, the scoops gather all sediment which rises to the surface of the water and is then discharged by the boiler-pressure into the reservoir. The water and steam may be let out of the boiler, independent of the boiler cleaner when it is necessary, by closing the valve connected to the boiler cleaner and opening the valve connected to the blow-off pipe proper. There is a globe valve attached to the bottom of the reservoir, where the sediment which has collected may be let out. This sediment should be let out every other day.

The writer desires to say, in conclusion, that about twenty plants have been connected up as described in this article,

Digitized by Google

although they have not all had boiler cleaners, nor has the injector been connected separately to the boiler, and the engines and boilers were arranged somewhat differently in the setting; but all are giving good satisfaction, and the piping in general was arranged as described here. Further, in regard to piping in general, in case of any accident to any part of the plant, the

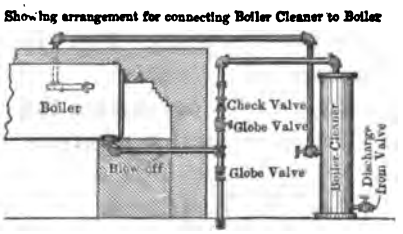

FIG. 176.

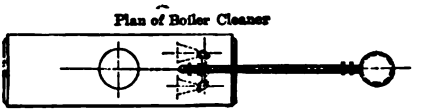

FIG. 177.

part which is crippled may be shut off without shutting down the whole plant.

The steam will reach the engine with but little drop in pressure, as all pipes are covered with an asbestos air space covering.

Much more can be written on this subject and on this same plant; and the writer desires to say that some time in the future, it would be interesting to give an approximate estimate as to the cost of the entire plant. The main object of this article is to create a fruitful discussion.

Mr. Wm. S. Aldrich.—With two valuable contributions on this subject before us, which have been so lately presented to the Society, it would seem that little more could be said, till we have seen how well their principles work out in practice. I refer to the paper by Mr. Wm. A. Pike, presented at the New York meeting (December, 1893),* on "Steam Piping and the Efficiency of Steam Plants," and to the foregoing discussion of this same topical question by Mr. Theodore F. Scheffler. Moreover, any discussion of this question cannot fail to become more or less a discussion of their papers.

First, then (following Mr. Pike's order of requirements), as to insuring "that practically dry steam shall always be delivered to the engine." Granted that this is fulfilled in so far as providing a non-conducting covering for the steam-pipe, it still remains to locate a separator, preferably in a horizontal pipe, between the throttle-valve and the steam-chest. With but few

* *Transactions A. S. M. E.*, Vol. XV., p. 536, No. 577.

Digitized by Google

exceptions, a separator in and for a horizontal pipe is to be preferred to one placed in a vertical pipe; for, by the former arrangement, the usual vertical pipe leading to the engine may be freed of accumulated entrained water by a "water well," or "water pocket," or "bleeder," and the water returned to boiler by trap, or steam loop, thus preventing at any time a flooding of the separator, as well as increasing the efficiency of separation by delivering only wet steam to the separator, instead of a mixture of this and water; with a separator in a vertical pipe none of these desirable features are obtainable.

Such a "water well" will be seen in many installations, as a continuation of the vertical steam-pipe, about four feet below the "T" branch to the horizontal pipe leading to the steam-chest. But it should have a glass water column near the top and bottom. Without these no one knows just where the accumulated entrained water stands; to leave the bottom drain-cock of such a "water well" slightly open is wasteful; to close it entirely for any definite period may result in flooding the separator, and later on the engine. The glass water column at the bottom will prevent the engineer from blowing much live steam out, when draining the "water well."

Secondly, Mr. Pike lays down the principle that "the steam should reach the engine with very little 'drop' in pressure." His plan of running large steam-pipes to the engine, and, further, in making use of large receiver spaces, or drums, for steam storage as near to the engine as possible, are in marked contrast to Mr. Scheffler's method of proportioning the steam-pipes leading off from the steam main. The first arrangement will maintain a reasonably steady pressure under the actual conditions of intermittent flow of steam to the engine; the second is theoretically correct on the assumption of uniform flow—an assumption which holds good for proportioning the piping to and from a steam-heating system, but which has held undisputed sway too long for steam-engine practice. Experimental determinations will, no doubt, soon show about how large such a steam-pipe receiver or storage drum should be, that, under known conditions of boiler pressure and engine speed, the "drop" may be limited to, say, one pound.

Mr. Pike has clearly shown that such a steam-pipe receiver may be made to do valuable separating service, thereby killing two birds with one stone.

Digitized by Google

Paraphrasing Mr. Pike's second requirement, as quoted above, we have another principle, probably equally valuable, namely, "the steam should leave the engine with very little 'rise' in pressure." This means more than a simple change of words may seem to indicate. Mr. Scheffler proportions the exhaust pipes, leading to the exhaust main, on the principle of uniform flow of exhaust steam. Now, an exhaust-pipe receiver would be as great a help, in its particular sphere, as a steam-pipe receiver in its place.

Certain forms of feed-water heaters, placed near the engine, are very efficient in keeping down the back-pressure on the engine; if we are not mistaken, this is enhanced by their large exhaust-steam space, quite as much as by their arrangement of feed-water coils. Placed as closely as possible to the engine, such an exhaust-steam drum receives the intermittent flow from the engine, and allows it to flow more or less uniformly thence to the condenser or to air.

In defiance of Mr. Pike's third principle is the almost universal practice of running steam-pipes with inclination to the engine (when it cannot be inclined back to the boiler, even), resulting in no provision for draining off the accumulations of entrained water except through the engine—a practice, he remarks, which not infrequently results in broken cylinder-heads and pistons. The usual explanation for such a course is that the condensed water should gravitate in the same direction in which the steam flows—that is, towards the steam-cylinder—a weak principle for such important work.

It is far preferable to slope the steam-pipe away from the engine (and, it may be, in some cases, away from the boiler, too), in order to properly meet Mr. Pike's third principle; namely, that the water should not collect "except in places especially arranged for that purpose." Such a place is the vertical pipe to which the engine and boiler steam-pipes are run; and at the bottom of such a vertical pipe should be the usual "water well," or "bleeder," connected as formerly described for the vertical pipe leading to the engine.

Wherever condensed or entrained water accumulates, it should be allowed to collect in a closed "well" or "pocket," provided with glass water columns, as noted previously. Instead of draining off the separator and water pockets to a sewer, they had better be run off to a hot well, or returned to

Digitized by Google

boiler by trap or steam loop. It is remarkable how much water will thus accumulate, in the course of twenty-four hours; and such an amount of water, at from 200 to 210 degrees, represents money saved or expended, according to the disposition made of it. Returned to boiler by trap or loop, it will be at a higher temperature and represent greater economy.

Referring to Mr. Pike's fourth principle, that of being able to isolate any part or portion of a steam-power plant, in case of accident, it will be found very desirable to use "quick-closing" gate-valves, as "emergency" valves. Such should be placed on each boiler connection as well as by the throttle (or used for the throttle) of each engine. Besides these, regular screw gate-valves should be placed between the "quick-closing" gate-valve and the boiler, to be closed at leisure, for security and repairs to disabled line. Wherever a flange connection is made it is well to provide for a blank or ring flange being inserted, according to whether it is desired to close it entirely for repairs, or to open it for the flow of steam. On the boiler side of every large gate-valve should be placed such a blank and ring flange connection, so that when required the gate-valve and all piping past it may be cut off absolutely from the boiler.

A point not fully considered by either of the papers here referred to is that of placing the feed-water heater. The function of such a heater is really twofold: first, to assist in reducing the back-pressure; secondly, to heat the feed-water to the highest point by the exhaust steam. Both of these will be best served by placing the heater as near as possible to the engine, whether the exhaust steam is to be thence run off to condenser or to escape to air. It is desirable to lower the back-pressure at the earliest moment, and, at the same time, to get the most heat from the exhaust steam. Again, it is easier to insulate a small feed-water pipe, carrying water at about 210 degrees, than a large steam-pipe, carrying the exhaust steam at about 215 degrees. It is also more economical in the amount and size of non-conducting covering required.

Mr. H. H. Suplee.—There are two or three points in connection with both of these discussions which I think would bear examination. In the first place, the query is as to certain general principles, and most of these discussions have been, I think, devoted to certain details rather than principles. The only principle to which I wish to call attention is one which has

Digitized by Google

arisen in my own experience, relating to the heating of feed-water. The functions of the heater were described as being only two; one to reduce the back-pressure, and the other heat the feed-water. There is a third, and really very important one; that is, to remove a large portion of the impurities in the water. Most of the carbonates, and a portion of the sulphates, which make hard scale, are precipitated if the water is heated hot enough and the resulting precipitate is given *time* to settle; besides which the mud or clay, whatever is suspended mechanically in the water, also can be separated in the heater. The printed discussion mentions an apparatus to clean the boiler, but it has been my experience that the very best way to keep a boiler clean is *not to put dirty water into it.* The only point in that connection about heaters which I desire to emphasize at this moment is that, as a rule, they are not made large enough. I do not mean not large enough in heating surface, but not large enough in volume. A large portion of the suspended matter and the chemically combined matter in the water, which forms scale, will separate and settle if only time enough is given, and if the heater which will heat the water to 208 or 210 degrees Fahr. is made large enough to allow the water to go through it very slowly, almost sluggishly, and the feed-water is allowed to pass through it from the bottom, taken out at the top, and to flow so slowly that the precipitated carbonates and the clay or the mud can settle, a very large proportion of it will be separated. If the heater is made with ample heating surface but small contents, the water will go through it at a velocity sufficient to carry even what may be precipitated through into the boiler. I have seen heaters which will perform very efficiently so far as heating is concerned, and yet very imperfectly as separators of impurities, simply because they were not large enough, and the water was rushing through so rapidly as to make a current strong enough to carry the impurities on into the boiler.

Mr. W. R. Warner.—The remarks of Mr. Suplee call to mind a little bit of experience in which I was interested the past fall, on the occasion of our firm having to purchase a heater for a boiler. Mr. Swazey is our expert on such subjects, but he was out of the country, and the responsibility came upon me and the superintendent; and as we knew nothing about it, we began to gain our education, and very shortly had literature enough to

Digitized by Google

run a college for a year, and yet did not know much about the matter.

But there were some very curious results that were manifested to us as we slowly became educated. Agents, of course, were very plentiful. They came around upon the slightest provocation, without any special urging, and we began to figure up the capacities of the various heaters, our needs requiring a heater for a 100 horse-power boiler. The heating capacities of various kinds ranged from one to six, all rated at 100 horse-power. That made us rather suspicious of the smaller ones, for one kind, we found, contained only 27 gallons of water. I make special mention of that from Mr. Suplee having called attention to the quantity of the water. The eloquent agents came in droves to see me, and, as I began to get educated a little, I said to one of them, No. 19, I believe: "How dare you sit there and guarantee your heater to heat water to 210 or 212 degrees, when you know it will not do it?" He saw that there was not a chance for making a sale, and he said—I will give his exact words—"Mr. Warner, I will tell you how we dare to. Not one in a hundred ever makes a test, and we can afford to take back one in a hundred."

Mr. Oberlin Smith.—I think that the college these gentlemen were speaking of just now must be a certain one I have heard of, where there was a great deal of learning, because all the students brought some learning with them, and none of them took any away.

Dr. Charles E. Emery.—There is much in this discussion that is instructive as well as interesting. Many points as to the proper connections of steam boilers have been brought out. As has been remarked, a great deal of attention has been paid to details, and, very fortunately, some have been pictured for us, one of which I will make the basis of a few remarks.

Turning to page 594 we find a method of connecting a boiler to a main steam-pipe which is subject to the gravest criticism. The main line of steam-pipe is above the boiler and the stop-valve at the boiler, as will be seen by Fig. 169, and naturally, in a very short time the whole pipe back to the valve will become filled with water, necessitating the arranging of a drip-pipe there. Not often does the engineer climb to the top of a boiler to open a valve; he generally tells some other person to do it. If, under such circumstances, the drip-valve is not opened, or is

Digitized by Google

stopped with sediment, the water collected passes to the engines and may wreck them, if, indeed, a water-ram is not formed, at the risk of life. In any event a so-called unaccountable accident will happen. The system is evidently wrong. It should be borne in mind that in the multiplication of boilers required in modern plants we do not wish so much to protect a single boiler among the many as the main steam-pipe which keeps up the supply from all the boilers. If the pipe is made safe, the boilers may also be kept safe; but the pipe itself is to be thought of first, and upon it the stop-valve should be placed. The connection shown is all right, if the valve be brought up to the steam-pipe. To marine engineers it would seem an unusual place for it. One of our first lessons was to secure a sea-valve to the hull, and a stop-valve to the boiler, with heavy flanges; but I appeal to everybody's common sense here to say that the rule as to boilers should be changed in large plants. The main steam-pipe is the more important point, and if the valve is put there, no pocket is formed, and one can safely send a mere helper to open it. When the valve is shut the water will run back to the boiler. When it is open the water will go with the current of steam, no matter which way the pipes be drained, which is one of the things too few think of. There should be no places where water can lodge, except those specially provided with proper provisions to drain the pipe and return the water of condensation. Again, in plants of large size, where many boilers are necessary, the steam should be delivered to the main steam-pipe through a check-valve. Such check-valve can also be made a stop-valve by turning a screw down upon it, making a "gag," as it is sometimes termed. Then, if anything blows out about the boiler, so as to let down the pressure, the check-valve shuts down, and the supply of other boilers to the main steam-pipe is not interfered with. This result happened to the large battery of boilers I erected for the New York Steam Company. The connecting pipes were bent laterally and dropped somewhat toward the boilers, but the stop-valves acted as checks, and were bolted to side flanges on the main steam-pipe, and not to the boilers. One night, during the early working of the plant, a new feed-pump in the basement stopped, and when discovered a boiler on the third or fourth floor was very short of water. The engineer rushed down and started the pump without knowing what mischief was being done above, and the cold water

Digitized by Google

cracked one of the headers. The water flowing out of that cracked two or three more. The water from those blew the fire on the furnace floor and put it out. The automatic damper opened, and, if there had not been a person in the building, the apparatus would have taken care of itself. The check-valve was the key to the situation. There was the general Post Office in New York, three or four printing offices, several large new buildings which were being finished by electric light at night, and numerous small users of steam, all depending on those boilers. If there had not been a check-valve, as described, all the steam from boilers of several thousand horse-power would have blown out of the injured boiler, and no one could have got near the latter for two or three hours to shut its stop-valve. The result indicates its own lesson.

The proper place to put drips has been discussed here. It should always be recollected that the water follows the slightest current of steam. I supposed, when starting the uptown plant of the New York Steam Company, that when running only 20 or 30 horse-power in a 10-inch pipe in Madison Avenue from Fifty-eighth Street, at a sharp grade, nearly to Eightieth Street, I could drain the pipe back under the current of steam, and at a later date distribute the condensation to the several houses. On starting, the water was carried along with the steam into the houses, periodically blocked up the heating apparatus, and gave the occupants trouble. I had to dig down at two places to the pipe and connect traps to remove the water at intervals, when there was no further trouble. Such experiences settle the principle that in the arrangement of steam-pipes the water must be carried with the steam to some point where there is opportunity for it to separate. In the case of the connection to the boiler we have discussed, the rule is different, for the reason that when the valve is shut off there is no current, and the water of condensation will run back to the boiler. As soon, however, as circulation is established, the water will go with the steam. The consequence is that it is generally better to have a drum at a low point near the engine. In such case the engineer, in starting his engine, will drain his drum as he drains his cylinder, and a steam trap will attend to the matter afterward, or a cock regulated by hand to maintain a water level, shown in a gauge-glass on separator.

Mr. Woolson.—On page 591 Mr. Scheffler says that he has an

Digitized by Google

ideal plant, and this statement is made without any qualifications. I want to say this, that my experience is that it is an unfortunate occurrence when your ground space is so limited that you are obliged to put more than two boilers side by side. There are times, of course, when it is necessary to put in more than two in a battery. But I regard it as bad design when not able to get at one side, at least, of each of those boilers.

There is one other point I want to call attention to. On page 598, Mr. Scheffler has bricked in his blow-off pipe. As I understand it, that blow-off pipe is bricked in for the protection of the pipe. But in bricking in that pipe he is prevented from getting at the rear end of the boiler to advantage, for I believe that the back-head of every tubular boiler should be "come-at-able" at any and all times, without having anything in the way that can possibly be avoided, and that brick wall is certainly in the way. I am a believer in the protecting of blow-off pipes where subjected to heat. I think it is very necessary, and yet it is not always done, by any means. One of the nicest systems that I have used, or have seen, is to slip on over the pipe fire-clay sleeves or "runners," as they are called in the steel works. That is where I first got the idea of using them. They happen to come very nice and true and round, and by just slipping those on to your pipe, making your joints up in fire-clay, and binding them together by a cast-iron collar at the end, outside the wall, they completely protect that pipe and take up scarcely any more space than a bare pipe, thus enabling an engineer or fireman, at all times, to get around it and over it and under it.

Mr. A. B. Fry.—Since, apparently, the discussion has chiefly tended toward the consideration of details, it may not be out of place for one who has very largely to do with the running operation of plants, notably in the larger public buildings, to say a word or two touching practically on the subject of which Dr. Emery spoke, that is, that you have got to consider the actual conditions of the plant. Assume you are putting a plant in a large public building. You are often forced to take the room which the architect gives you. Take the theory here stated of placing the heaters above the boilers; now, in how many buildings in large cities is it possible to get sufficient head-room above the boiler for the necessary steam connections? I think any one who has much to do with the construction of plants in city buildings knows that it is a difficult matter to get sufficient

Digitized by Google

head-room for the absolutely necessary connections, without putting anything else on top of the boilers. That is especially true if you propose, as has been suggested, to use the heater for a purifier. For example, it is the practice at the United States Custom House and Post Office, in Chicago, to use the feed-water heaters practically as purifiers. A very large quantity of exhaust steam is carried to them in proportion to the size of the heaters, and there is a pair of them; the run of each is about five days, and then the heaters are changed over, and the deposited sulphates and carbonates cleaned out. Now, it is obvious that if you are going to use the heater as a purifier, you cannot put it on top of the boilers. You have got to have it in a place where it is easy of access, and where the temperature is such that the men can work about it. I think that Dr. Emery's criticism of this proposed method of piping up the battery is very just indeed. My own experience was in a plant put in a large electric-light station, where the valve was originally put as shown here, only on top of the boiler-shells instead of on the drum, so that invariably there was a heavy accumulation of water in the piping on top of the valve. The only way to get rid of that was to open the drip thereto, but if you leave a drip open there is a heavy loss of steam. You may say you can catch and trap the steam, but my experience has been that it is almost impossible to get a trap that will work satisfactorily on a steam pressure of a hundred and twenty-five pounds or above, unless you can deliver the water to the traps in large quantities and comparatively cool. Then, so far as the feature of "burning" blow-off piping goes, I can say from personal experience that I have found no trouble from blow-offs of a battery of boilers that are forced frequently up to an inch and a half forced draught, by connecting together the surface blow-off and bottom blow-off back of the rear wall. The surface blow-off comes out from the rear wall at a point opposite the water line. The bottom blow comes out in the conventional place. Then, by making a vertical connection between the surface blow and the bottom blow, and having the main blow-off valve outside of both, there is no trouble in getting a sufficient circulation between the two, and in seven years blow-offs so piped have not needed a renewal.

To revert to the first thing—the position of the heater—speaking from the standpoint of a running engineer, I think that those

Digitized by Google

who have the immediate charge of plants would often be very grateful indeed if more thought was put in by designers of those plants as to the location of given parts of the machinery. Too often, both on shore as well as on board ship, we find auxiliaries in every conceivable place—places difficult to keep clean and difficult of access for repair work—and I am sure that a little increased thought on the part of the designers would be of benefit to engineers, and would increase the economy of the operation of their plants.

No. 632—121.

What form of filing-cabinet have you found most convenient for clippings, etc.?

Mr. Spencer Miller.—Every engineer knows the value of clippings and scraps taken from trade journals. The difficulty of collecting and classifying such valuable information has been appreciated by almost every engineer, and many novel ways of classifying this material have been employed. The writer will describe a scrap *cabinet*, having long since abandoned the idea of depending upon the ordinary scrap books, although a new form of scrap book is included as an element of the scrap cabinet.

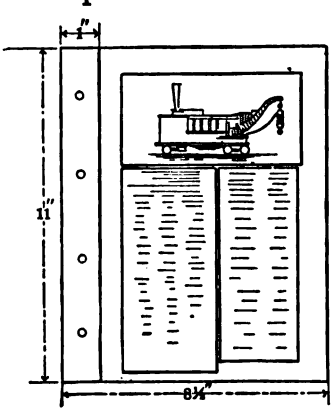

FIG. 178.

This scrap cabinet consists of a series of drawers of proper size, in which may be deposited clippings in the drawer under the head to which it belongs. This is the quickest and simplest way of filing a clipping or bit of information under its proper heading. If for any reason the user does not wish to stop to classify the clippings he should provide himself with a large drawer, either in the cabinet or in his desk, where such clippings may be thrown to be assorted at leisure. His first step therefore would be to distribute the material so collected from the large drawer to the various drawers for classification. Then take one drawer at a time, trim the clippings down to the minimum size, and paste the same upon perforated sheets (see Fig. 178) which are to be made into scrap books later on; such

Digitized by Google

scraps, of course, to be pasted on one side only, with date and name of publication from which it is clipped. These sheets, when there are sufficient of them, are assembled in their proper order in the form of a scrap book with covers (Fig. 179) and put into the shelves of the library, which may be a part of the scrap cabinet (Fig. 180).

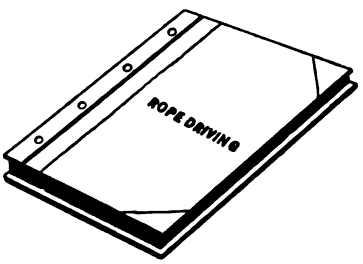

FIG. 179.

The matter of the size of these sheets is a question to be settled by the engineer. The author uses 8½ x 11 inches. The sheets are of manilla paper, good stock, about as heavy as the average writing paper, and of a quality good enough to write upon with ink, in fact the same manilla paper as ordinarily found in the best scrap books. The sheets are cut in accordance with the sketch with a separating strip or stub, 1 x 11 inches, pasted on one edge of the same, being

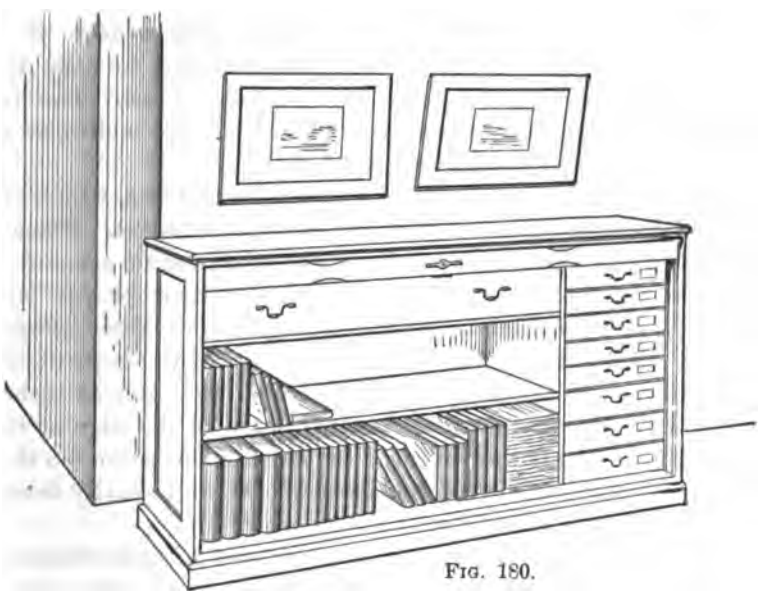

FIG. 180.

perforated with four holes as indicated (see Fig. 181). This keeps the book from widening at the opening side. These sheets, after the clippings have been pasted thereon are still left in the drawer, usually until there are enough of them to staple

Digitized by Google

together. The ordinary Gill fastener (Fig. 182) is sufficient for this. If there are only a few sheets, they are simply stapled together and left in the drawer, but when the drawer becomes filled up, the sheets are taken out, inserted between covers, with a title printed on the outside, the whole stapled or laced together, and filed away in the shelves. The covers are made $9 \times 11\frac{1}{2}$ inches. These are made stiff, with a flexible joint one inch from the binding edge. Thus it is to be seen that at no

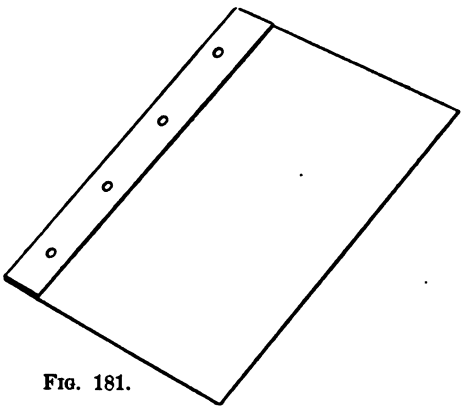

FIG. 181.

FIG. 182.

time are these clippings in any form in which they cannot be easily found, and there is no time when the books may not be rearranged. For this reason it is better not to page the books at all. The inside dimensions of the drawers should be $10 \times 12\frac{1}{2}$ inches, so as to allow the books to be dropped in if desired.

Valuable data are found in the copies of patents, which are obtained from the Patent Office at a cost of ten cents. Patents may be bound by themselves in covers of the same size, or, if desirable, may be filed in the drawer under their proper title, or they may be bound in with clippings under their proper heading. When this is done, paste the edge of the copy of the patent to one of the separate slips, 1 inch wide and 11 inches long, so that the perforations just project over the edge of the copy. This extends the width of the copy of the patent so that it conforms with the size of the loose sheets, and usually leaves a little margin for trimming.

A cabinet should consist of a large drawer for miscellaneous scraps, probably not less than 3 inches deep, another drawer for the individual sheets and a few separating strips, which will be a "stock drawer," and then as many other drawers as necessary to cover the subjects desired to be covered. The illustration of the cabinet shows one which the author has used now

Digitized by Google

for over three years. It contains, besides the drawers, two shelves, the lower one being high enough to take in the scrap books, being 12 inches in the clear, with separating stripe (not shown in Fig. 180) ½ inch wide leaving a space for each scrap book; on these stripes the title of the book are placed, and the upper shelf is high enough for copies of the *Transactions* of the engineering societies. There is also one drawer which is about 40 inches long, inside dimensions being 9 x 4 inches, in which are filed rolls or large sheets which could not be put in the scrap books. On these shelves trade catalogues may be placed. Many variations may be made of this cabinet. An examination of these scrap books would reveal not only clippings pasted to their pages, but also type-written copy either on the same sheets or on sheets of the same size, which may be extracts from volumes which are too expensive to buy for the sake of clipping, also notes and memoranda; and included in this scrap book is an "index rerum" to other volumes. Blue prints from photographic negatives are pasted in the book, as well as sketches.

One of the difficulties which arise usually to all engineers who have a love for clipping and collecting scraps, occurs when an immense amount of scraps have been collected and he feels a great desire to cull. This system permits culling perhaps better than any other. A dozen sheets may be torn out of a book, and the whole can be simply closed up, and their absence is never missed. A great deal of data becomes old, out of date, and unreliable, and if it is not wished to be preserved for historical purposes it is best to throw it away.

A nice feature of the cabinet is a rolling front like that of a roll-top desk, which is not in the way when the cabinet is open, and keeps out the dust when closed. It also serves to make it possible to lock up the whole affair with one key.

Mr. W. L. Chase.—I have worried clippings and incidentally myself with a good many kinds of files, beginning, of course, with a scrap book and paste pot, and including some of the standard letter files, and various sizes and styles of envelopes. I am now using a sort of "home-made" affair which takes care of clippings, trade catalogues, circulars, United States patent copies, letters, etc., with such convenience and satisfaction that I offer the following description and the accompanying example of it.

Digitized by Google

I get made to order at an envelope factory, from heavy manilla stock, plain envelopes nine by twelve inches (9 × 12), open on one of the twelve-inch sides, and without flaps. These are placed in file by laying flat on shelves piles of from half a dozen to thirty or forty of them (Fig. 183), according to volume of contents, with the open side at the back of the shelf. The file mark

FIG. 183.

is written along the front or closed twelve-inch side. Pamphlets are placed in these envelopes, generally without other cover, distributed if of small size, to make the envelopes lie flat. Circulars, letters, patent copies, page clippings, etc., of which a larger number can be placed in a single envelope, are generally placed in folders about eight and three-quarter by eleven inches (8¾ × 11), open on three sides, any one of which can be withdrawn from its envelope without disturbing the others.

Digitized by Google

Column clippings, notes, etc., are placed in similar folders, to one leaf of which are pasted pockets for holding the clippings, or, preferably, narrow flaps, for keeping in position on the leaf of the folder removable pockets or column-width folders in which the clippings are placed. On one side of the column-width folders I write the titles or catch phrases of the contents, to avoid having to search through a number of folders for an item wanted. The small folders, with contents intact, may be shifted about within the same large folder, or transferred to another large folder or another envelope, without rewriting lists of contents. And no matter how fast nor in what directions the collection grows, there is no rearranging of material required, provided, of course, a satisfactory classification is used, except to split up the contents of a large folder or envelope which gets too fat into two or more folders or envelopes. I use this arrangement in connection with the Dewey Decimal classification, but I do not see why it should not prove equally satisfactory with an alphabetic or other classification. The photograph pasted upon the back of the accompanying sample envelope shows the appearance of the file, and an examination of the sample folders within will give a quicker and clearer idea of those details than can a written description.

Mr. William T. Magruder.—An efficient filing cabinet is one which requires the smallest expenditure of time to file from one to one hundred clippings, or to remove from one to a dozen clippings on from one to a dozen different subjects. They should be so filed as to be readily accessible at all times, and so that they may be removed separately for use in the office or elsewhere, for filing under other titles, or for the waste paper basket. The cabinet should permit of unlimited growth with the least expense of time and money. It should be an economizer of time, should have a properly titled place for every subject in which you are interested, convenient in size to fit all likely clippings without excessive folding, and should be dust-proof.

Having used envelope systems and box systems and scrap-book systems, and having investigated most of the patented systems, I have devised, and now use with much pleasure, filing cabinets which fulfil all the above requirements and are thoroughly convenient. Externally they have the appearance of bookcases, the usual glass doors being replaced by a Scotch

Digitized by Google

holland shade on a spring roller, with the sockets inside of the top rail of the outside casing. The width of the clipping case on the inside between the ends should be $1\frac{1}{2}$ inch greater than the width of the curtain or shade goods it is proposed to use. Goods of 36 and 42 inches are preferable to those of greater width, and the edges should never be trimmed. The lower slat should be $\frac{1}{16}$ of an inch shorter than the distance between the ends or uprights, so as to cause the shade to run true at all velocities. The pigeon-holes for the clippings are made $4\frac{1}{4}$ inches wide by 3 inches high and 10 inches deep for filing newspaper clippings. For filing the *Transactions* of the Society and similar pamphlets I use divisions $6\frac{1}{2} \times 3 \times 10$ inches, while for catalogues I use divisions 9×3 (or 6) $\times 12$ inches, and $8 \times 8 \times 12$ inches. The pigeon-holes are made by inserting horizontal tin shelves into a saw-kerf $\frac{3}{32}$ of an inch deep, made by a thin-bladed back-saw in wooden uprights $\frac{1}{2}$ of an inch thick. The outer edges of the tin shelves are bent down and back upon themselves for strength, and to prevent cut fingers, and to enable them to retain themselves in the saw-kerf. They should be inserted $\frac{1}{8}$ of an inch or more beyond the wooden verticals, in order to accommodate the title slips. These consist of the title of the pigeon-hole, written or printed in a space $\frac{5}{16}$ of an inch by 2 inches, bent at right angles on the end of a piece of paper 2×5 inches. A title slip is placed on top of each tin shelf and under its own clippings.

When inserting clippings for the first time, it is well to leave a pigeon-hole vacant in every five to accommodate growth; then, when the clippings on a given subject get too numerous for one division, the tin shelf over them may be withdrawn, and a division 6 inches high obtained; or, they may be reclassified under two or more titles. When a set of pigeon-holes is completely filled up, or when there are no more unassigned divisions, another clipping case may be added, and the clippings with their title slips rearranged alphabetically in a very few minutes, and vacant spaces left where they are most likely to be needed.

A clipping should always be folded so that it can be filed with its title uppermost, so as to be seen and read as soon as withdrawn. As the stiles of the outside casing of the cabinet project 1 inch over the edge of the shade, which runs in the space between the casing and the wooden uprights, the cabinet is as nearly dust-proof as is necessary. The tin shelves are amply

Digitized by Google

strong up to 9 inches wide, and are more economical in space occupied and in first cost than wooden shelves. By increasing the number of saw-cuts, all the advantages of ratchet shelving may be obtained.

Mr. Barton Cruikshank.—In keeping memoranda, catalogues, clippings, etc., I find that an envelope, six and a half inches by ten inches, opening at the end, will hold nearly anything that I care to keep. This size is large enough to take loose sheets the size of our *Transactions*, and yet not enough larger to make a very irregular assortment, if catalogues and pamphlets of the same size are placed in alphabetical order in the case without an envelope. I place the catch-word in the upper left-hand corner of either the envelope or the cover of the pamphlet, and then for small memoranda I use the standard cards furnished by the Library Bureau, though any other would do equally well. These I perforate and place in proper order on the front of envelope, fastening with the standard paper fasteners.

Where card memoranda happen to come in front of catalogues not in envelopes, a piece of cardboard, like the envelope in size and perforation, enables me to place the small cards in proper order.

The document files made by any of the office specialty companies, such as the Library Bureau of Boston and New York, the Globe Company of Cincinnati, and others, or Adjustable Book and Paper Rack, made by the Wells Manufacturing Company of Syracuse, do nicely as holders for the envelopes. If the Wells racks are used, a cabinet made so that the racks can be pulled out like drawers from the end of the rack will prove better for this system than their standard cabinets.

Any matter too large to go in the cabinet used may be catalogued on the small cards and then filed in any convenient place; if enough of this larger size is collected, of course another cabinet of the same kind, but larger, may be used.

Mr. W. H. Jaques.—The clipping or filing bureau of the Society is evidently deficient, so far as I am concerned, as I did not receive a copy of this paper for discussion until a few moments ago. I believe that the New York *Sun* has the reputation of having the finest record of clippings in this city. As that paper did me the honor to say that I have the best-arranged data on the subject of war material, I would have been very glad to have brought some samples of my method

Digitized by Google

here to-night and to have had something prepared that might be of interest to the Society. I can only say that I have some three or four hundred thousand subjects indexed, relating to war material, with which I can answer almost any question that you might ask, if you were in my library. I file and record information by a combination of the Harvard card catalogue system, seven sizes of envelopes and seven sizes of boxes, filling one box of each size before using another. If I attempted to have one box for every one of the three hundred thousand subjects it would be quite impossible for me to have an office large enough to have that number of boxes. I file my materials (it doesn't make any difference whether they are photographs, blue prints, clippings, or records) as they come to me. When one box is full of one sort I commence another box, and in that way I add boxes as you would add to your collection of books. This is an extremely simple system, and I shall be very glad, if the Society desires, to send it samples of my method.

There are quite a number of points Mr. Miller presented to which I take marked exception. I do not believe in using the mucilage brush except to cause the different parts of the clippings to adhere to each other, when the editor has not been thoughtful enough to put them in such a form in the paper as to allow me to cut them out conveniently. It is very easy to file clippings, but it is very difficult to get them when you want them. If I go away from home and want to take any data with me, I examine my card index, take the envelopes from the boxes and put them in my satchel. It is a simple system, which facilitates the use of the material collected in a most excellent way.

Having a large drawer for clippings, to be sorted at leisure, is perfectly useless. If you do not get rid of your clipping on the day when you get it, you will get yourself into trouble very rapidly. In regard to scrap-books, I would not have one in my technical system. They take up a great deal of room and are of no earthly use for reference.

For reference to patents, periodicals, and works I do not wish to destroy, I have a very small printed form on which is printed the head, sub-head, date, author, number of the paper, and the sequence of the envelope in the drawer. When reading I mark the articles to be indexed with a blue pencil and a red pencil. The blue pencil indicates the head, and the red pencil the sub-head. As I run my eye over the technical journals I mark them

Digitized by Google

and give them to my secretary for indexing. He has a series of rubber stamps for the various periodicals and dates, and he records all the required data on the form described above, and that small, thin piece of paper goes into its proper envelope. In that way I have been able to file an enormous amount of material in a very small space.

I file photographs, blue prints, and drawings the same way most draughting-rooms record them.

In regard to culling, if the slips are not pasted anywhere, it is, of course, very easy, as the slips become obsolete, to take them out of the envelopes and throw them away.

I am sorry, as I said before, that your filing bureau was not in such good form that I could have received this topic before.

The President.—There is nothing to prevent your writing it out briefly and sending it in, and it will appear.

Mr. Jaques.—Thank you. I shall be very glad to accept your suggestion, Mr. President.

Mr. Oberlin Smith.—My experience in this matter is rather limited, having kept myself in the attitude of a young man, just getting along in a temporary way, expecting, as he gets toward middle age, to profit by the experience of other people, and never starting a very good system, because he hopes a better will turn up. It seems to me that a great deal of study should be put into this question, and that proper cabinets and filing arrangements should be manufactured, which could be bought cheaply by everybody, instead of having the miscellaneous mixture which we have now. As a merely temporary matter, for want of something better, as I say, I have been in the habit of using home-made drawers with two small compartments, side by side, duly arranged in the manner of an ordinary card index, taking cards and envelopes $3 \times 4\frac{1}{2}$ inches. These lean back against a sloping adjustable block at the rear, which can be set to make the effective drawer longer or shorter. Over the thick middle partition, sunk flush with top of drawer, are two thin strips of wood connected with links, exactly like a parallel ruler. The centres of the links are pivoted to centre of partition, and thus the strips may, by one motion, be swung out over both sets of cards, etc., respectively, keeping them from rising when the drawer is opened. The envelopes contain postal cards received with information on, small clippings of all sorts from newspapers, or letters, temporarily written memoranda,

Digitized by Google

etc. At the top of each is written in the usual way the name of subject, the initial of the name being a large black printed letter, to assist the eye in arranging alphabetically. Between each letter of the alphabet is a wider card, as usual in similar card indexes, with a big letter at the top. Besides the envelopes there are, as before stated, cards with a printed initial, dotted line, and blank date. This is, therefore, a mixture of envelopes containing anything at all that may be useful, and ordinary white stiff cards, with information written or pasted on them. Whenever any document is too large to go in these double-width drawers it is put into a larger one, occupying the same width, below, and an index card is put in above, indexing everything in the large drawer, so that the small one (or a series of them when it becomes full) really contains all the information sought, and is complete as a record. Everything in the large drawer is in $9\frac{1}{2} \times 12\frac{1}{2}$ inch envelopes, made of stiff manilla paper. Laid against the front of them, to hold them back and down, is a heavy wooden block hinged so that it can be thrown against front of drawer, beyond balancing position, when one wants to take anything out. In these envelopes are kept large pieces of newspaper, or small pieces pasted on cards, or patent copies, or drawings and sketches on one of my standard drawing-paper sizes, 9×12 inches; sometimes also thin pamphlets and certain letters that are kept out for special reference, etc. In regard to keeping pamphlets in general, I have never been able to devise any really good way. I usually keep them in pasteboard boxes which I buy, that are alleged to look like books. They are convenient things to stand on bookshelves, with the name of the subject on the back. So long as catalogue makers have no standards of size, as they ought to, and as I hope they will some time, catalogues come in of every imaginable length, breadth, and thickness. And I have no doubt that if the mathematicians invent a fourth dimension, that will be varied too. Any special indexing that is desired, further than one can get by merely looking at the labels, can be done by the card index. In regard to keeping periodicals, I merely put them away in files, that is, if they are not periodicals that are to be thrown away. If I want to refer to anything therein I mark with a red pencil an "I," for "index," and my stenographer indexes them upon a card. I won't say anything here in detail about a system of keeping standard drawings. I have

Digitized by Google

a complete system for that performance in a separate safe with large drawers, all the sizes being classified in an index belonging to them; but of course there is nothing to prevent a separate reference being entered in the card index regarding any certain drawing.

Mr. F. A. Halsey.—After trying and discarding several plans, I settled some ten years ago upon the Du Bois letter file. This file has no special merits, so far as I know, for its intended purpose, but it is admirably adapted for filing clippings. The plan is very similar to the one sketched by Mr. Smith. It consists of a box of various sizes—my own being about twelve inches long by six deep, and eight inches wide. The box has a hinged lid, and is provided with slips of heavy manilla paper standing upon their edges, and having the alphabet cut upon their upper edges. A follower board is provided for pressing the contents together and keeping them flat. Additional manilla slips are provided for subdividing different letters of the alphabet when the collection becomes numerous enough to need it. I have a piece of heavy pasteboard in the box, over which the clippings are folded to make them uniform in size, and after folding and writing an initial letter upon one corner, the clipping is ready for filing. I have also a supply of heavy writing paper of the same size as the piece of pasteboard previously named. These papers are ruled in squares, and on them I place my various notes and memoranda, so that the box becomes a note-book as well as a scrap-book. Clippings of small size are pasted upon these papers so as to prevent their falling to the bottom of the box, and this is all the pasting required. Clippings occupying different sheets of paper are simply folded together, without pasting. One of the great advantages of the file is its facility for indefinite enlargement. When the box gets full a new one is obtained, and the alphabet is divided between the two. My objection to the system presented in the paper is that it is too elaborate and involves too much labor.

As stated at the beginning, my file has been in use for some ten years, and so far has proven itself entirely satisfactory.

Mr. Walton Clark.—The knowledge that I have a system in use, not at all original, that is perfectly satisfactory to me, overcomes my natural desire to remain silent at the first meeting of the American Society of Mechanical Engineers that I have had the privilege of attending. I would criticise the system of

Digitized by Google

Mr. Miller as involving too much labor. During my apprenticeship I followed his system of cutting out clippings and throwing them into a drawer, thinking that I would file them subsequently, and, with the natural hunger of youth for printed matter, I accumulated a drawerful, and pretty soon nearly a houseful, which eventually I consigned to the flames. I do not believe at all in separate drawers for different subjects. If you adopt a separate drawer for each subject and you accumulate one hundred subjects, as you probably may in the first two months, you may have a hundred separate drawers, when one drawer could contain all the material covered under those hundred heads. Another objection to the drawer and the paste-pot system is the fact that a clipping is often most valuable if you can give it, at the moment of cutting it, a title that will suggest to you the impression that that clipping makes upon you at the time, and the bearing it has on some work done previously. The time to title and dispose of a clipping is when you make it, and many men get their clippings where they do their work, all over the country. I have collected data and clippings from New York to San Francisco, and from St. Albans to San Antonio. I carry with me a small pocketbook having two compartments. In one of these compartments I have small envelopes and cards of exactly the same size, the envelopes for clippings, the cards for data. These I take out from time to time, as occasion arises, fill them, and place them in the other compartment of the pocketbook. At home I have drawers about like the upper one shown on the blackboard—very much on the Library system filing plan. In these drawers I drop these filled envelopes and cards. I can drop in fifty in five minutes in their proper places. The separation of subjects is made by cards that stand a quarter of an inch higher than the others, and have written near their upper edges the names of the subjects filed behind them. They are alphabetically arranged. When I began a filing system it was necessary that it should be one that was easily handled, and one that should be cheap to start. One drawer and one or two ordinary cardboard filing cases for containing pamphlets and the larger clippings, that will not go in the little envelopes that I carry with me, are, with the cards and envelopes, all that is necessary to start the scheme. Pamphlets and large clippings I index on the cards that I drop into the drawer in their proper places, putting the large clippings and pamphlets into the filing cases,

Digitized by Google

which are divided up into compartments by lettered leaves. These leaves are designed to simplify the finding of filed papers, and are movable, so that one compartment may contain all that goes into that case, if necessary. I make comparatively few clippings. My experience does not lead me to value a file by its cubic inches. I take care of the pamphlets finally by binding them, and on the back of the binding I place certain numbers, which are given also on index cards, referring to the contents of the pamphlets contained in that binding. The cards are placed in the drawer above referred to. Such a filing system as I have endeavored to describe can be started at an expense not to exceed five or six dollars, and can go on to cover the three hundred thousand subjects of the gentleman who collects war data.

The culling out of old data is very simple under my scheme. When I refer to a subject in the little drawer I take out all the cards and clippings on that subject and run them over. If there is anything that has been proved valueless in the meantime, I tear it up. The system may not be perfect; I suppose it is not, but it answers my purposes so far, and it takes little time. I do not know what occupation Mr. Miller is engaged in, but I know if he were a gas-house hustler he would not have time to carry out his plan of filing scraps.

Mr. Louis Wright.—I would like to indorse the last speaker. I had a system in use eight or nine years similar to that which the last gentleman mentioned, filing the clippings in separate drawers and indexing them by the leading word of the article. I found that to work very satisfactorily. I can find anything I want on a moment's notice.

No. 632—122.

What is the best telephone system, between the manager's office of an extensive plant and the various departments of the works?

Mr. C. J. H. Woodbury.—The telephone differs from all other methods of communication in that it virtually brings the parties into each other's presence. There is not the delay of messengers, the conventionalizing of writing, the waiting for a reply; a message goes in only one direction; the telephone serves in both directions. It brings about a conference, and, as such, one

Digitized by Google

of the highest values is in its application to manufacturing establishments, for which purpose a fertility of inventive resource has been applied to provide apparatus especially adapted for such use, which naturally differs from what is required in the general service of a telephone communicating to a central exchange, whose ramifications not only extend to other telephones in the vicinity, but, through the long distance lines, over such a vast area that a single voice can hold conversation with any one of over half the population of the United States. With the factory system the problem is a far different one, being merely that of entering into instant communication with any one of twenty, or even more, persons in the vicinity, and the service must be furnished at a minimum cost, both for installation and attendance. The simplicity of the apparatus as furnished permits the first condition, while its arrangement provides for a complete intercommunication at will among the persons using the telephone, without any switchboard or attendant.

The telephone lines in the factory system are cabled according to the number of stations, in a manner comparable to that of certain watchmen's record clocks, or the usual annunciator devices. At each telephone the person calling up any one else on the system makes the connection to the telephone desired by means of a dial or a plug on the telephone stand, and the connection is made without the use of any switchboard or the assistance of any other operator, and rings a bell by the touch of a button.

If the person addressed is busy at his telephone, the one interfering can learn the fact by transmission of sound, and he is informed of the interruption as readily as if it occurred in the personal presence of those individuals.

In this apparatus, any combination of wiring which may be desired to meet local conditions is feasible; for example, all of the communications over the lines may pass through the telephone on the desk of the manager at his will, without ringing that bell, unless one of the departments wishes to address him directly; or the manager's telephone may be so connected that the reverse will not occur, by arranging the wires so that when his transmitter is in use he has communication only with the party addressed. In some cases it may be preferable to place a number or perhaps all of the instruments on a single circuit, and summon the party desired by numerical calls on the bells;

Digitized by Google

and, at the other extreme of various methods, a small switchboard is placed in the office of the works, and attended to by some person employed in the counting-room.

The factory telephone system is purely local, and does not involve the cost of investment and maintenance of long lines, and complicated switchboards at central stations, with their constant attendance, as is the case with the general telephone system; and by reason of this avoidance of expense the cost is far less, and the factory system is furnished at a correspondingly diminished rate. To obtain satisfactory results it is essential that the plant should be installed by one thoroughly familiar with the apparatus, yet the arrangement of wiring and batteries is so simple that a man in charge of dynamos, watchmen's clocks, and annunciators, generally used in manufacturing establishments, should also be able to give any attention which the corresponding portion of the factory telephone system may require.

No. 632—123.

Recent developments in the manufacture of illuminating gas.

Mr. M. P. Wood.—I desire to call the attention of the Society to some improvements that have been lately made in the manufacture of gas, either for fuel purposes, or, more particularly, for illuminating purposes, as distinguished from the destructive distillation of coal. The method ordinarily in use requiring a complicated apparatus and great heat, this might be denominated a cold process, inasmuch as in the evolution of the gas no heat at all is evolved. It is produced, as I will show you here, from calcium carbide, and not only from this substance, but barium carbide and strontium carbide possess the same features, and possibly to a greater degree than the calcium carbide. It is simply a union of common carbon, pulverized (any carbon that will make a good carbon filament for electric light, or pulverized coal), mixed in a definite compound with ordinary builders' lime, quicklime, and then fused in the electric furnace (a sketch of the furnace made upon the blackboard), the resulting compound being a mass resembling the slag from a blast furnace, gray in color, very hard, weighing 155 pounds to the cubic foot. These substances are fused in an open electric furnace in which the base is a cast-iron plate forming the cathode to which the

Digitized by Google

negative wire from the dynamo is led, and the carbon point enters the open mouth of the furnace and makes the positive pole connection to the dynamo. The material is shovelled in, the current turned on, fusion at once ensues, the furnace is tapped, and as it runs off other material is added, and a continuous process is had. As we drop this piece of carbide into the water, you will notice at once hydration begins, and the gas evolved ignites as I apply a match to it. It would burn continuously if the air could get to it. It slacks upon exposure to the air about the same as quicklime, and requires to be protected in the same way. After air slacking, however, it does not lose all of its gas-giving properties. Here is some that has been air-slacked which I will pour in, and it still evolves gas and burns. It should be used while in its primal condition of a hard substance. For a domestic apparatus all that is necessary is an earthen or metallic vessel of any given capacity, say about the size of a Dutch churn, with a little gas-holder the size of a water barrel, and an arrangement of a funnel siphon over it, so that as your holder descends it would open a valve and allow a small quantity of water to reach the carbide, and the evolution of gas at once commences, raises the holder, cuts off the supply of water, and it is automatic in all respects. A single charge will last from three to four or six months, according to the quantity of gas used. The chemical composition of the matter is this: the calcium carbide represented by the symbol CaC_2 is hydrated by the addition of water and becomes $CaC_2 + H_2O$. The affinity for the oxygen in combination in water is stronger for the calcium than it is for the hydrogen, and it comes over to the calcium, forming CaO quicklime, leaving $C_2 + H_2$, or pure acetylene gas. Its specific gravity

$$= \left\{ \begin{array}{l} 92 \text{ (Berthelot)} = 69.484 \text{ pounds} \\ 91 \text{ (Thomsen} \ = 68.878 \text{ pounds} \end{array} \right\} \text{ per 1,000 cubic feet.}$$

When mixed with 40 per cent. of air, its specific gravity = .9412 to .946 = 71.1856 pounds per 1,000 cubic feet. Pure acetylene calorific power (Thomsen's formulæ)

$$= \left\{ \begin{array}{l} 21{,}492.7 \text{ HU per pound} \\ 1{,}493.4 \text{ HU per cubic foot} \end{array} \right\} \text{ burning to water (liquid),}$$

$$\text{or } \left\{ \begin{array}{l} 20{,}745 \ \text{HU per pound} \\ 1{,}441.4 \text{ HU per cubic foot} \end{array} \right\} \text{ burning to watery vapor.}$$

Digitized by Google

Its equivalent light unit is 80,000 to 100,000 candle-feet of ordinary city gas of 22 to 26 candle-power. The gas of itself is not condensible by cold or pressure. It burns with a perfectly white light, so much so that two half-foot burners, burning 1½ feet of gas each under an inch of pressure per hour, give a light equal to diffused daylight. It bears an admixture of 40 per cent. air with manifest advantage over burning pure acetylene. This 80,000 candle-feet combination represents the gas when 40 per cent. of air has been mixed with it. Explosive effects of mixture of air and gas cease at about 20 of air to 1 of gas. When the gas is burned pure it represents from 8,000 to 10,000 cubic feet of 80 to 90 candle-power gas. It is perfectly white, and more steady than any ordinary gas flame. The flame is tough—cannot be blown out under ordinary circumstances by currents of air or by the mouth, except as you exert yourself and give it an intermittent blast, which would extinguish almost anything. The substances that enter into this carbide are 2 tons of pulverized coke, 2½ tons of quicklime, which, united, give 2 tons of CaC_2, and requires an electrical energy of about 75 volts, 2,000 amperes, equivalent to about 200 horse-power, which would yield about two tons of carbide for a 24-hour day.

These are the principal facts connected with it. Whether it will ever replace city gas is a question of how cheaply it can be made. At present this cost represents about 10 tons of carbide per day per 1,000 horse-power, or what may be considered equal to 24 pounds of carbide per 24 hours per horse-power. The alternating current that is now being experimented with, in distinction to where it has been made by the direct current, will probably bring up the production to 20 tons, with a possible 30 tons in sight for the dynamo duty per 24-hour day. At 10 tons the cost of the gas would probably be $1.50 per thousand of 24 to 26 candle-power. It will completely replace the Pintsch system of manufacturing gas from oil, or any other compressed gas from the ordinary hydrogen water gas, and the carburetted air gas, or the Springfield and kindred gassed-air systems. Domestically, a corner of a cellar six feet square would give room for an apparatus that would take care of half a dozen surrounding houses, and would be perfectly automatic, only requiring the charging of the gas generator once in a certain number of months. The carbide material would be shipped, or could be

Digitized by Google

handled, in empty oil casks—anything to keep the air from it—and in quantities would be shipped very likely in tank cars. As we break the substance we find that it has crystallized in the cubical form, and some of the crystals, when the carbide has been fresh made, are a very beautiful purplish-blue color, very large and very distinctive. In searching for the chemistry of the carbides we find comparatively no knowledge concerning them. Our text-books of chemistry are barren on the subject of carbides, though acetylene gas has been known to chemists for over sixty years, and its production from the fusion of charcoal and zinc by a group of Bunsen elements fully described and practised in the laboratory. The advent of electrical science in the construction of the dynamo has brought out these subjects in the case of borides, silicides, and the carbides, all of which are assuming great chemical importance, and all of which are gas-making materials. The substances from which they are made are widely diffused in nature. That calcium carbide has been developed to this point is simply a question of accident in the manufacture of carbon filaments for electric light. Barium and strontium, when put into the form of carbides, give a little greater percentage of gas than the calcium. They would be represented by the symbols:

$$BaC_2 + H_2O = BaO + C_2H_2 = \text{acetylene gas.}$$
$$SnC_2 + H_2O = SnO + C_2H_2 = \text{“ “}$$

Mr. Kent.—I would like you to explain how the 2 tons of carbon and 2½ tons calcium make 2 tons only of the carbide.

Mr. Wood.—There is a waste. You will notice in these samples that the compound is a dark gray color instead of being white. It is the free carbon in it.

Mr. Kent.—That 2 tons is the pure carbide, and the other is the residue?

Mr. Wood.—Yes, together with the furnace wastes in volatilization and impure furnace slag.

Mr. Kent.—Is it a simple mono-carbide?

Mr. Wood.—That is all; two elements of carbon and one of calcium.

Mr. Kent.—It is curious that in iron the carbides are indeterminable. We do not know them. But here it seems a plain carbide. Have you compared the light you can get out of 200

Digitized by Google

horse-power with the amount of electric light you can get with the same horse-power?

Mr. Wood.—I am informed that one ton of the carbide will give an equivalent light of from 80,000 to 100,000 candle feet of ordinary city gas, 22 to 26 candle-power gas. I have not measured the power of the light myself.

Mr. Kent.—Would that give as much light as the electric light from the same horse-power?

Mr. Wood.—That I am not prepared to answer, as electric candle-power is a very variable quantity.

Mr. Durfee.—I presume it would be possible to use this material in the ordinary Dobronnier apparatus, which was formerly used for making pure hydrogen for domestic purposes?

Mr. Wood.—The ordinary house service-pipes require no change at all to use the gas.

Mr. Durfee.—I mean, using it as a table lamp, with the Dobronnier arrangement of bell and outside cylinder.

Mr. Wood.—This material, when the surplus water is poured off, and the deposit is enclosed for a short time within a case, develops a very notable per cent. of ammonia—so much so that the refuse is a most excellent fertilizer. There would be no waste in it.

Mr. Durfee.—This (referring to a sketch) is the arrangement to which I referred. It consisted of an exterior cylinder in which there was a bell. In the bell was suspended a gauze of zinc or iron. This was an acidulated solution out here. When the cock was closed the gas filled the bell and drove the solution away from the suspended zinc. Then, of course, the generation of gas stopped at once. When the cock was opened the generation of gas immediately commenced. The question I meant to ask was, whether such an apparatus, for portable use in a house where there were no gas-pipes—whether this calcium carbide could not be put in that gauze and used precisely as the zinc was used.

Mr. Wood.—It would work the same as if the connection was made with a little gas receiver, only, in this case, you would consume pure acetylene, whereas the gas burns with better effect and is cheaper when mixed with some air.

Mr. Durfee.—In the old hydrogen lamp the apparatus was not as big as that.

Digitized by Google

Mr. Kent.—Is any of the calcium carbide available for experiments?

Mr. Wood.—Not at present. It is being made ready for the market. Within the next 30 days there will be, in the neighborhood of New York, the first manufacture of it started, at the rate of 10 tons a day, and to be followed in January to the amount of 100 tons a day; it is exploited by the principal gas men of the United States. Most of the leading presidents of the strong gas companies of the United States are at the head of the enterprise. The intention is to complete a number of large plants at as early a date as possible, and to use the C_2H_2 for enriching water gas, instead of oil or naphtha. Approximately, 5 gallons of naphtha are used to bring the ordinary blue, or water, gas up to a 30-candle-power light. This amount of naphtha represents from 4,200 to 4,800 candle-feet of 30-candle-power gas, according to the quality of the naphtha, and the skill used in the process of gasifying it. This amount of naphtha would be credited with 300 cubic feet out of every 1,000 cubic feet of commercial gas made, of 30-candle-power, and represents approximately 16 cents per 1,000 cubic feet of commercial 30-candle-power gas. It will require 300 cubic feet of 90-candle-power acetylene gas, to be mixed with the same quality of blue gas that the oil gas was mixed with, to produce the same 30-candle-power light. This would call for the carbide to cost about $5 per short ton to equal the oil enricher in cost. If the price at which the gas can be made and put into holders reaches 30 cents per 1,000 cubic feet, it will compete then with any of our heat-gas processes of the day, as very few, if any, of our largest gas companies succeed to-day in putting gas into a holder at less than about 40 cents to the 1,000 cubic feet, actual cost of labor, material, and repairs.

Mr. Durfee.—It would appear that this invention has brought us to the time when any one can readily set the river on fire.

Mr. Gillis.—It might be interesting to know that some gentlemen came into our works and brought some material which is very similar to this. They came up from North Carolina, and they said they had large beds of it down there, and they had really discovered the river on fire in some locations. I do not say that it is this material, but it is something similar. They called it calcium phosphide.

Mr. Wood.—I presume it is the same material as this I pre-

Digitized by Google

sent, which was made at Leakesville, North Carolina. It probably came from the same concern, as it hydrates and burns like it. It is a calcium carbide, instead of a calcium phosphate. There is no phosphorus in the material from which the carbide is made, and if there was, it would probably be eliminated during the process of fusion of the calcium, the same as in the basic process of making steel. The coke used for making the carbide contains some sulphur, but no sulphurous compounds are found in the acetylene gas. The high heat of the furnace, the presence of the calcium and silica in the fire-brick lining of the furnace, all combined, dissipate the sulphur by volatilization, or flux it out of the bath. I would state this is not my invention. It is the invention, or, rather, the stumbled-on discovery of Mr. Louis C. Wilson, formerly of Leakesville, North Carolina, who was at the head of an electric plant there manufacturing carbon filaments. They found in their experiments large quantities of this material. It was thrown away, until somebody stumbled on the point of hydrating it, when the evolution of gas was discovered. The process is in the course of being patented. Sir Humphry Davy experimented with it in the twenties, and produced it by the action of zinc fused with charcoal, with Bunsen batteries of about two to three hundred elements. It has been known in chemistry a long time, and has been used to a greater or less extent by chemists in the preparation of pure acetylene gas. It is not absolutely pure when made with zinc; it contains about 2 per cent. of free hydrogen; but when made from the calcium, or barium, compounds it is said to be almost absolutely pure. These specimens contain no known percentage of hydrogen, though the presence of ammonia, NH_3, would indicate the presence of some free hydrogen, that, uniting with the nitrogen set free by the combustion of the air present in the open furnace, and the presence of the high heat from the electric arc and fused calcium, would furnish all the conditions necessary for the production of the NH_3.

Mr. Durfee.—One very important possibility, it struck me, in connection with this new invention, is its use in naval warfare. A few hundred shells exploded in the vicinity of an enemy's vessel, and ignited by the blast of his own guns, could be very likely to make it exceedingly uncomfortable, I should say.

Digitized by Google

Digitized by Google

PAPERS

OF THE

DETROIT MEETING

(XXXIst)

JUNE 25th TO 28th, 1895.

Digitized by Google

Digitized by Google

DCXXXIII.

PROCEEDINGS

OF THE

DETROIT MEETING

(XXXIst)

OF THE

AMERICAN SOCIETY OF MECHANICAL ENGINEERS,

June 25 to June 28, 1895.

LOCAL COMMITTEE.

JESSE M. SMITH, *Chairman.*	C. H. NORTON,
S. A. BAUGH,	W. A. PENDRY,
C. E. BEMENT,	T. H. ROBERTS,
P. M. CHAMBERLAIN,	W. S. RUSSEL,
W. L. CLEMENTS,	J. A. SLACK,
M. T. CONKLIN,	W. D. STEEL,
M. E. COOLEY,	CHARLES STEELE,
F. M. DUNLAP,	H. E. WHITAKER,
R. G. EWER,	C. B. CALDER,
THOMAS FARMER, JR.,	ALEXANDER DOW,
H. S. HODGE,	F. W. HODGES,
S. E. JARVIS,	F. C. WAGNER,
W. J. KEEP,	GEORGE H. LOTHROP,
F. E. KIRBY,	WILLIAM S. CONANT,
E. L'E. MAHON,	T. H. HINCHMAN, JR.,
A. G. MATTSSON,	O. L. WEBER.

THE XXXIst meeting of the American Society of Mechanical Engineers was convened in the city of Detroit, Mich., on Tuesday, June 25, 1895. The hospitable intentions of the members resident in Detroit, and of the citizens whom they had grouped around them, began in advance of the first professional session with an invitation to be their guests upon a drive to Belle Isle Park, which is located in the Detroit River. Tickets were supplied to the vis-

Digitized by Google

iting members for the ferry-boat which conveyed them to the island landing, and at that point carriages provided by the local committee were in waiting, to convey the party in a most enjoyable tour through the driveways of the park. Returning over the bridge which connects the island with the city, the carriages traversed interesting parts of the city and returned to the hotel. The hotel headquarters were in Room 1 of the Russell House, on the main floor, and the business sessions were held in the hall of the Young Men's Christian Association, on the corner of Griswold Street and Grand River Avenue.

Opening Session. Tuesday, June 25.

President E. F. C. Davis called the first session to order at 8.30 P.M. for professional papers. The three that were read and discussed were those by Messrs. Robert Allison, entitled "The Old and the New;" A. M. Goodale, entitled "A New Form of Sterilizer;" and W. H. Francis, entitled "A Portable Disinfecting Plant." The former received discussion by Messrs. Rockwood, Holloway, Kent, Jones, and Warner.

Topical discussions were then elicited on the question of the relative merits of the milling machine and the planer, and upon the question of the best method of separating finely divided metal particles in an oil.

At the close of the session an adjournment was had to a most enjoyable reception, with collation in the lecture-room adjoining, at which an opportunity was given for the guests and their ladies to meet their hosts.

Second Session. Wednesday, June 26.

The business session of the convention was convened at 10 A.M. The register in headquarters showed the following members in attendance:

Allison, Rob't,	Bates, A. H.,	Brashear, Jno. A.,
Angus, Rob't,	Baugh, S. A.,	Bray, C. W.,
Atterbury, W. W.,	Beck, M. A.,	Brill, Geo. M.,
Bang, H. A.,	Bement, C. E.,	Bryan, Wm. H.,
Barnes, D. L.,	Bierbaum, C. H.,	Bulkley, H. W.,
Barrus, Geo. H.,	Blackburn, A. H.,	Bull, Storm,
Bauer, C. A.,	Bole, W. A.,	Buchanan, A. W.,
Basford, Geo. M	Bonner, W. T.,	Burns, A. L.,

Digitized by Google

Calder, C. B.,
Carpenter, R. C.,
Cheney, W. L.,
Chamberlain, P. M.,
Cole, J. W.,
Conrader, R.,
Conklin, M. J.,
Cooley, M. E.,
Church, E. D.,
Conant, Wm. S.,
Cooper, H. R.,
Davis, E. F. C. (*Pres.*),
Dodds, Elihu,
Ewer, R. G.,
Farmer, Thos.,
Fawcett, Ezra,
Foster, E. H.,
Frith, A. J.,
Geer, Jas. H.,
Giddings, C. M.,
Gobeille, Jos. L.,
Goss, W. F. M.,
Gowing, E. H.,
Haberlin, H.,
Hartness, Jas.,
Henning, G. C.,
Herman, Ludwig,
Hill, W. E.,
Hinchman, T. H.,
Hodge, H. S.,
Hodges, F. W.,
Holloway, J. F.,
Holman, M. L.,
Howard, Geo. E.,
Hunt, C. W.,
Hunt, R. W.,
Hunting, A. A.,
Hutton, F. R. (*Sec.*),
Jacobus, D. S.,
Johnson, J. B.,
Jones, Washington,
Keep, W. J.,
Kempsmith, Frank,
Kent, Wm.,
King, C. C.,
Kirby, F. E.,
Kirchhoff, Chas.,
Kuhn, Jos.,
Laforge, F. H.,
Laird, J. A.,
Lane, H. M.,
Lavery, Geo. L.,
Loring, C. H.,
Low, F. R.,
Magruder, W. T.,
Mahon, W. L'E.,
Marshall, W. H.,
Mattsson, A. G.,
Meier, E. D.,
Mesta, Geo.,
Miller, F. J.,
Miller, Walter,
Mix, M. W.,
Moore, E. L.,
Meyer, H. C.,
Norton, C. H.,
Park, Wm. R.,
Parks, E. H.,
Paul, J. W.,
Pendry, W. A.,
Platt, Jos. C.,
Porter, H. F. J.,
Prosser, Jos. G.,
Rearick, C. B.,
Roberts, T. H.,
Rockwood, Geo. I.,
Rogers, W. S.,
Royse, Dan'l,
Rumely, W. N.,
Russel, W. S.,
Stewart, R. J.,
Steele, W. D.,
Shankland, E. C.,
Smith, Jesse M.,
Sorge, A.,
Souther, Henry,
Stanwood, J. B.,
Stiles, N. C.,
Stratton, W. H.,
Swasey, A.,
Sweet, Jno. E.,
Stearns, Albert,
Stetson, Geo. R.,
Taylor, F. W.,
Trautwein, A. P.,
Varney, W. W.,
Warren, B. H.,
Warner, W. R.,
Wheeler, Seth,
Whiting, C. W.,
Whitlock, R. H.,
Whitney, E. H.,
Woodbury, C. J. H.,
Wyman, H. W.,
Willis, E. J.,
Whitaker, H. E.,
Weil, Chas. L.,
Weber, O. L.

There were also many guests and ladies present through the meeting.

The first business was the report of the tellers, to count and scrutinize the ballots cast for members. Their report was as follows:

The undersigned were appointed a committee of the Council, to act as Tellers (under Rule 13), to scrutinize and count the ballots cast for and against the candidates proposed for membership in the American Society of Mechanical Engineers, and seeking election before the Thirty-first Meeting, Detroit, 1895.

Digitized by Google

They have met upon the designated day, in the office of the Society, and have proceeded to discharge their duty. They would certify, for formal insertion in the records of the Society, to the election in due form of the persons whose names appear on the appended list, to their respective grades.

There were 476 votes cast, of which 17 were thrown out because of informalities (the members voting having neglected to indorse the sealed envelope with their personal signature).

JOHN THOMSON,
F. H. BALL, } *Tellers of Election.*

ELECTED AS MEMBERS.

Bettendorf, Wm. P.,	Le Fevre, Peter E.,	Sergeant, Chas. H.,
Boerner, Emile C.,	Lindsay, Wm. Edward,	Serrell, John A.,
Calder, C. B.,	McElroy, Jos. A.,	Shankland, Edw. Clapp,
Dow, Alex.,	McKay, John Edwards,	Stillman, Howard,
Hardy, Geo. Fiske,	McMillin, Emerson,	Valentine, Daniel,
Hardy, Geo. R.,	Mathews, Wm. Edwin,	Wagner, Frank C.,
Hodges, Fredk. W.,	Mead, Frank Seabury,	Wellman, Chas. H.,
Horton, John Theodore,	Mossberg, Frank,	Weil, Chas. Lewis,
Hunt, Andrew M.,	Robeson, Anthony Maurice,	Whinery, Samuel.
Kelly, Jas. R. F.,	Schmidt, Chas. R.,	

ELECTED AS ASSOCIATES.

Blood, John B.,	Hedenberg, Wm. L.,	Newton, Chas. E.,
Fairbanks, Robert Noyes,	Kretschmer, F. G.,	Robinson, Cyrus,
Farrand, Dudley,	Lothrop, Geo. H.,	Uhlenhaut, Fritz, Jr.,
Gubelman, Fred. J.,	Newhall, John B.,	Willis, Edward Jones.

PROMOTION TO FULL MEMBERSHIP.

Cooper, Henry R.,	Glenn, H. F.,	Magoun, Henry A.,
	Ridgley, Wm. Barret.	

PROMOTION TO ASSOCIATE MEMBERSHIP.

Ackerman, Wm. S.,	Anderson, Fredk. Paul,	Church, E. D., Jr.,
	Prather, Henry B.	

ELECTED AS JUNIORS.

Booraem, J. Francis,	Hepburn, Fredk.,	Ross, Taylor Wm.,
Brown, Frank G., Jr.,	Hinchman, Theo. H., Jr.,	Sanborn, Francis Noel,
Colles, Geo. Wetmore, Jr.,	Howard, George Edwin,	Sanderson, Ed. Spaulding,
Conant, Wm. S.,	Katte, Edwin Britton,	Shellenberger, Louis Ray.,
Cottler, Joseph G. C.,	King, John H.,	Stafford, Benj. Ed. De Witt,
Crain, L. D.,	Macdonald, Jas. Victor,	Towne, Fredk. Tallmadge,
Follows, Geo. Herbert,	Paul, John Wallace,	Treat, Chas. Henry,
Gray, John Wilson,	Perry, John Cranston,	Weber, Otto L. E.,
Gregory, Wm. B.,	Perry, Samuel B.,	Young, William S.
	Rice, Arthur L.,	

Digitized by Google

A committee had been appointed by the Council to coöperate with representatives of the Architectural League of New York, and the Underwriters represented by the Tariff Association of New York, to investigate and test methods of fireproofing structural metals in buildings, and to obtain data for standard specifications. This committee consists, for this Society, of Messrs. H. de B. Parsons and Thos. F. Rowland, Jr. Their report of progress was as follows:

Your Committee on Fireproofing Tests begs leave to report progress. This committee was formed for making tests of fireproofing materials now in the market, and to obtain, if possible, data relating to such materials as would be a help to engineers and architects in designing and constructing fireproof buildings. The plan of the committee is to construct a furnace in imitation of a room, the walls being built of different classes of material, such as are used in partitions and exterior walls, the roof to imitate a fireproof ceiling, supported by a column of the usual constructions. This ceiling and column will be loaded by dead weights and a hydraulic press. When ready, this chamber will be heated as near as possible to the conditions in an actual fire, only maximum effects being considered.

The iron column or steel in column and roof beams will be protected by different fireproofing materials, and the effect of the fire will be noted in each case.

Your committee is associated with a committee representing the Fire Underwriters' Association of this city, and also a committee representing the Architectural League of New York. Both these associations have guaranteed a certain sum of money each, and the architects throughout the country are being requested to subscribe.

When sufficient money has been raised, the tests will be undertaken and carried out as rapidly and as uniformly as circumstances will permit. It is hoped that the fireproofing materials to be tested will be furnished free by the manufacturers, and that the manufacturers of structural metals will supply the necessary columns and beams. One of the labor schools in Brooklyn has kindly offered the services of its students for the labor of erection of the furnace. The Continental Iron Works of Brooklyn has kindly given the use of the necessary ground, and also kindly arranged to allow the committee to use its gas for the generation of heat.

Digitized by Google

Your committee requests that if any of the members of the American Society of Mechanical Engineers is especially interested in this work, that he will furnish any information that he may have on the subject, and if any member wishes some particular test made, your committee will be much pleased to be placed in communication with him.

Yours respectfully,

H. DE B. PARSONS,
THOS. F. ROWLAND, JR., } *Committee.*

Mr. G. C. Henning, Secretary and Reporter for the Society's Committee on Standard Methods of Tests and Testing Material, presented a report of progress as follows:

Mr. Gustavus C. Henning.—There is one paper presented which is the historical part of the work done by the committee so far. The committee has not had an opportunity to meet and consult in regard to the results, for the reason that the results of strength and resistance have not yet been completed and tabulated. On the other hand, Mr. Keep has presented two monographs; one is based on the breaking strength of cast iron, without reference to the size of the bars; and the other is a new line of investigation, referring to the expansion and shrinkage of bars of metal under the cooling effect in the mould and in the air. These two papers Mr. Keep will present in person. The papers are presented now in a preliminary form, with the idea of having plenty of opportunity to discuss them by December, at our annual meeting. This will put the matter before the Society in such a way that the members can undertake individual investigation and understand and corroborate the work that has been done. But the committee itself has not taken any action on this work. There is no need of reading that paper on the historical part of the test, because you will all see what it is—it is simply a foundation for the work that the committee is doing; and as you read the results you will refer back to this to know how the tests were made, in order that you may either duplicate the tests or find out whether there is any criticism proper with reference to how the material was obtained for the tests. That is all that the committee has to report at present.

This report, in full, will be found as a paper of this convention, and the two monographs by Mr. Keep, "Transverse Tests of Cast

Digitized by Google

Iron" and "Keep's Cooling Curves," are presented as independent papers, with appended discussions in the sequel.

At the close of the debate on the papers of Mr. Keep the secretary presented, in the name of the Society's committee which was to consider and report concerning a standard gauge for thicknesses of metal, the following report:

REPORT OF COMMITTEE.

The Society's Committee on Standard Thickness Gauge for Metals was appointed in the autumn of 1892, has had the subject under earnest consideration, and has reported progress both in 1893 and in 1894.

It has aimed, in furthering the work committed to it, to secure the coöperation of the other societies of America, and the possibility of an international system has received earnest attention. The committee has met in joint session as a joint committee with the representatives of the American Railway Master Mechanics' Association, and committees of coöperation have been appointed by the Canadian Society of Civil Engineers, the Engineers' Club of Philadelphia, the Civil Engineers' Society of St. Paul, and the Engineers' Club of St. Louis, and the joint recommendation of this committee and the committee of the American Railway Master Mechanics' Association has received cordial and appreciative support.

The committee therefore report the success of their efforts to bring into acceptance the use of a gauge whose number for each thickness is the number of thousandths of a standard inch in that thickness.

Where a notched gauge is used the suggested standard form is an oval gauge, stamped with the words Decimal Gauge, and the committee further recommends the abandonment and disuse of the various other gauges now in use, as tending to confusion and error.

The committee therefore recommends that the members of the American Society of Mechanical Engineers be advised to use and recommend to others the Decimal Gauge, in which the thickness of dimension shall be given in thousandths of an inch, and present the following resolution:

Resolved, That the report of the committee of the American Society of Mechanical Engineers be accepted, which favors the use of a Decimal Gauge for thickness of metals, the number denoting the thickness to be the dimension of the notch in thousandths of an inch.

Digitized by Google

Mr. Wm. Kent.—I would like to ask whether the committee have considered the question of adding to their report a recommendation with respect to the law passed by Congress about two years ago to establish a standard gauge for boiler metal. I know that the manufacturers of the United States are doing the best they can to facilitate the use of that gauge, and in our headquarters in Detroit are some circulars to that effect. I think that the committee might take steps to urge the repeal of that law. It is such a very bad law that I think it ought to be repealed. I am heartily in favor of the recommendation of the committee.

Mr. E. D. Meier.—I think that that law is so ridiculous that it does not require repeal.

The President.—I agree with you. I would call attention to the careful wording of the report, in accordance with the Society's precedents in these matters, that the resolution does not recommend the adoption by the Society of the Decimal Gauge, but simply proposes that the Society accept the report of its committee. The gauge thus receives the weight which its careful consideration by an expert committee has given to it, but the Society as a whole does not make itself responsible by adopting a gauge.

Mr. Chas. H. Norton.—May I not ask if the recommendation does not mean this—that we measure by thousandths of an inch instead of by inches; simply have a piece of steel with notches cut in it, supposed to be so many thousandths of an inch? Is not that it?

The President.—Yes, sir; instead of the arbitrary gauge which means nothing.

Mr. Chas. H. Norton.—What objection is there to our recommending people to measure by something which they can see and understand, instead of by a gauge which has a number in it which does not mean anything particularly?

Mr. David L. Barnes.—It seems to me that our object should be to bring this Decimal Gauge, which will be taken as a standard of the association, before all the members. It never can be done at an open meeting such as this. It only can be done by letter ballot. That is the experience of the railroad associations; and I would like to make an amendment to the resolution, that this matter be submitted by letter ballot as to all the members, establishing a precedent that may be taken as a standard for this association in such questions.

Digitized by Google

The Secretary.—I would like to take the floor in opposition to Mr. Barnes's motion. I think it is very undesirable that we should go back on the Society's precedents in the matter of action upon proposed standards to which reference has been so clearly made. We do not want to put ourselves on record as adopting anything in the way of a standard, because we have run foul already of the approval which we gave by implication some years ago to a standard in the matter of testing boilers, and we propose to revise it at this very meeting, perhaps. I think that the best thing we can do is to say that the energy and capacity of a very strong committee of the Society has been directed towards the favoring of the Decimal Gauge, and that we accept the report of this capable committee, and that is as far as we go. The information which the Society has had from its committee is already full and ample, because there was circulated, just after the New York meeting, when our committee reported, a preliminary report of progress, in which the intention of the committee was stated. Action has only been deferred so long as it has in order to secure concurrent action of other societies. That action has been taken by the other societies, and all that remains for us to do now is simply to adopt the report of the committee and let it be printed. All that we will do, in accepting the report, is not to disapprove the recommendation of the committee, and it does not seem to me that a letter ballot would be advisable or necessary. Consequently I oppose Mr. Barnes's motion on that ground.

Mr. Henning.—I most heartily indorse what Professor Hutton has said in regard to this matter. We do not recommend any standards. The procedure of the Society opposes such action. It simply accepts the reports of committees which are specialists in their line, who do the best they can, and announce to us what they think is the best that can be done. Now, if we do any more than accept this report, if we issue a letter ballot, then immediately every one else will say the Society at large has accepted that report. They will make no distinction, any more than they make the actual distinction now in regard to the boiler trials report. Every one says that is the Mechanical Engineers' standard. We have never adopted that method for making tests; our constitution forbids such a thing. If we merely accept the reports of committees, they go on the records, and if at any future time something comes up which requires further discussion, we can take it up at any meeting. Those interested will bring it up for

Digitized by Google

discussion. To issue a letter ballot is practically to bind the association as a whole to the adoption of a standard.

Mr. Barnes.—With the permission of the gentleman who seconded my amendment, I will withdraw that motion, it having been made under a misunderstanding. I supposed it was intended that the gauge should be a standard or recommended practice of this Society, and to be adopted as such.

Mr. Holloway.—I would move that the report of this committee be accepted by the Society and placed on file, and published in the volume of *Transactions*.

Mr. Kent.—I second that motion.

The motion was carried.

At the close of the stated business, Mr. E. D. Meier presented, in the name of the members of the Society resident in the city of St. Louis, Mo., an invitation that the spring meeting of 1896 should be held in that city. The remarks on this subject were as follows:

Mr. E. D. Meier.—The St. Louis members of the American Society of Mechanical Engineers desire to invite the Society to hold its next year's spring convention in St. Louis. We are reënforced in this by two representative bodies of our city. The Manufacturers' Association and the Business Men's League have both authorized me to extend a hearty welcome to the Society to meet at St. Louis. I assure you that we will give you a hearty welcome, and make your stay a pleasant and agreeable one.

Mr. M. L. Holman.—I desire to present, further, in the same connection, the official invitation of the St. Louis Engineers' Club bearing on this point. We have, in St. Louis, some interesting things in the way of street-car facilities, electric lighting on a large scale, and some very large manufacturing plants.

The invitation from the Engineers' Club of St. Louis is as follows:

June 24, 1895.

To the American Society of Mechanical Engineers, Detroit, Mich.:

Gentlemen: In selecting a meeting-place for the convention which will be held in the spring of 1896, we trust that the claims of St. Louis will receive favorable consideration. We heartily indorse the invitation which is to be extended by the St. Louis local membership. The Engineers' Club of St. Louis will join them in endeavoring to make your stay here both pleasant and profitable.

Respectfully,

Engineers' Club of St. Louis,

By S. Bent Russell, *President.*

Digitized by Google

After the applause had subsided with which these remarks were received,

Mr. Jos. C. Platt.—I move, as the sense of this meeting, that this invitation be accepted, and that the matter be referred to the Council, with power to make this arrangement.

Mr. Holloway.—With the hearty seconding of those present, and with the certainty that we shall have a warm reception in St. Louis.

The motion was carried.

The President.—Under Article 31 of the constitution it becomes the duty of the president at this meeting to appoint a nominating committee of five members, to nominate one president, three vice-presidents, three managers, and one treasurer for the next annual meeting. I appoint on that committee Messrs. Charles H. Loring of New York, C. J. H. Woodbury of Boston, Robert Allison of Port Carbon, Pa., W. J. Keep of Detroit, Mich., and Joseph Leon Gobeille of Cleveland, Ohio.

No other general business being presented, the professional papers were then taken up, the first one being that of Mr. F. W. Dean of Boston, entitled "The Efficiency of Boilers." Mr. Dean's paper concluded by moving the following resolution as amended:

Resolved, That the Council of the American Society of Mechanical Engineers be requested to appoint a committee of nine members of the Society to consider the standard (of 1886) method for conducting steam boiler trials, reported to the Society by a committee at that time, and if, in the judgment of that committee, a revision of that standard would be desirable, that such committee report its recommendations to the Society.

This motion being duly seconded and put, was carried, and the Council, at a session during the convention, appointed as such committee Messrs. Barrus, Coon, Dean, Emery, Hunt, Kent, Porter, Potter, and Thurston. The discussions on Mr. Dean's paper which led to this action will be found appended to that paper.

The session then adjourned for a luncheon, tendered by the Committee of Arrangements, on the roof garden which is a feature of the Chamber of Commerce building of Detroit. Between the hours of 1 and 2.30 the lunch room was reserved exclusively for the use of members and guests, and the fine breeze and the outlook over the city were much appreciated.

Digitized by Google

THIRD SESSION. WEDNESDAY AFTERNOON, JUNE 26.

Reassembling at 3 P.M. in the convention hall, the following papers were taken up and discussed:

By Prof. De Volson Wood, on the "Strength of Iron as Affected by Tensile Stress while Hot," and by Prof. R. C. Carpenter, on the "Effect of Length of Specimen on the Percentage of Ductility," discussed by Messrs. Henning and Carpenter.

Mr. W. A. Gabriel's paper was entitled "A T-square and its Mountings."

Messrs. Thurston, Henning, and Sweet discussed Prof. R. C. Carpenter's paper on "Force Required and Work Performed in Driving and Pulling out Wire Nails," and Messrs. Jacobus, Henning, and Kent discussed his paper on a "Coal Calorimeter."

Professor Goss's paper on "New Forms of Friction Brakes" was discussed by Messrs. Rockwood, Jacobus, Whitney, Angus, Henning, and Willis.

Mr. Willis's paper on a "Horse-power Planimeter" was discussed by Messrs. Kent, Bierbaum, and Jacobus.

The concluding paper of the session was that by Prof. D. S. Jacobus, on "Tests to show the Distribution of Moisture in Steam when flowing in a Horizontal Pipe;" discussed by Messrs. Meier, Carpenter, Kent, Royse, Willis, and Barnes.

Arrangements had been made by the fire department to exhibit to the engineers a feature of the fire system of Detroit, whereby large mains from the river front can connect a series of fire hydrants directly to the pumps of a powerful fire-boat. At the Park Circus, at 5 o'clock, a public exhibition was most successfully made in honor of the visitors. The events were as follows:

(1) Six 1½-inch streams from one hydrant, 100 feet of hose to each. This is accomplished by means of a spreader on each hydrant opening, through 2½-inch hose.

(2) Three 1½-inch streams of 100 feet each, through 3-inch hose.

(3) Two 1½-inch streams of 100 feet each, through 3-inch hose.

(4) Two 2-inch streams of 100 feet each, through 3-inch hose.

(5) One 2½-inch stream, three lengths of 50 feet each, 3-inch hose, siamesed into one 50-foot length of 3½-inch hose.

(6) One 2½-inch stream, three lengths of 50 feet, 3-inch hose, siamesed into one of 50 feet of 3½-inch hose.

The boat started with 120 pounds of water pressure.

Digitized by Google

In the evening a most enjoyable reception was tendered to the Society by citizens of Detroit, at the Detroit Club, corner of Fort and Cass Streets. This was a dress reception, with decorations, music, and a very handsome supper, ending with dancing for the ladies, and a smoking conversazione for the gentlemen.

Fourth Session. Thursday, June 27.

The papers of this session were by Prof. De Volson Wood, presenting an "Analysis of the Tremont Turbine," discussed by Mr. Nagle; by Mr. M. P. Wood, on "Rustless Coatings for Iron and Steel;" by Mr. F. W. Taylor, on "A Piece-Rate System," discussed by Messrs. Gantt, Penton, Rogers, Kent, Barnes, Henning, Bement, Platt, Gobeille, Holloway, Norton, and Warner.

The paper by Mr. W. H. Bryan, upon the "Down Draught Furnace for Steam Boilers," was discussed by Messrs. Dow, Nagle, Kent, Carpenter, Meier, Taylor, Laird, Holman, and Rockwood.

The paper by Mr. E. J. Armstrong, on "A New Shaft Governor," elicited discussion from Messrs. Fawcett, Allison, and Sweet.

The session then adjourned.

The excursion of this afternoon and evening was one of the most notable of the week. The fine steamer *City of Cleveland* had been put at the service of our hosts by the Detroit and Cleveland Steam Navigation Company, and a large party of members and guests was delightfully conveyed to Star Island, on the St. Clair Flats. Luncheon was served on the boat and music was rendered by an orchestra. After a fish supper, served most comfortably in the hotel dining-room, the boat returned, reaching its wharf in the neighborhood of 9 o'clock. The experience was a unique one to by far the majority of the excursionists.

Fifth Session. Friday, June 28.

The opening paper was by Mr. Geo. S. Morison, on "Expansion Bearings for Bridge Superstructures," discussed by Mr. Henning; Professor Carpenter's "Tests of the Experimental Engine of Sibley College, Cornell University," was discussed by Messrs. Kent, Rockwood, and Bull.

The papers by Messrs. E. C. Knapp, on "A Method of Propor-

Digitized by Google

tioning the Cylinders of Compound Engines," and of Prof. D. C. Jackson, reporting "Tests of a Combined Electric Light and Electric Railway Station," were discussed together by Messrs. Stanwood, Rockwood, Kent, Jesse M. Smith, Hutton, Davis, Stearns, Stetson, Rearick, Bryan, Carpenter, Keep, and Bull.

The closing paper, by Mr. Geo. M. Brill, on "Pipe Covering Tests," was discussed by Messrs. Taylor, Kent, Rearick, Stearns, Carpenter, Rogers, and Nagle.

The excursion of this afternoon included a visit to the Power House of the Public Lighting Commission, and to the Michigan Stove Works, in carriages which met the party at the convention hall and at the hotel, for their convenience. Luncheon was most acceptably served in the offices and corridors of the Stove Works, and an opportunity was given to witness the operation of a device described in a paper of the meeting, for recording the changes of length in a cast-iron bar, as it passed from the liquid to a solid state. Escorted thence to the plant of the Detroit Oak Belting Company, a further collation was served under a tent, and thence the party embarked on board the steamer *Pleasure* for a visit to the pumping station of the City Water Works, and to visit, upon the Canadian side, the exceptionally handsome office building of the firm of Hiram Walker & Sons, at Walkerville. The boat, returning, landed some of its passengers for outgoing trains, and the convention was at an end.

At the closing professional session Mr. J. F. Holloway, reporting in the name of a Committee on Resolutions, presented the following series of resolutions:

The American Society of Mechanical Engineers, having been the honored guests of the Chamber of Commerce of the city of Detroit, during a part of its stay in the city, and desirous that a sense of its appreciation for favors received may be conveyed to that body, for its efforts and interest in contributing to the success of our convention by the use of their well-arranged Roof Garden on Wednesday, for the preparation of maps, folders, and other printed matter of interest, and for other attentions, hereby tender them our hearty vote of thanks.

As the Directors of the Detroit Club have shown signal courtesies to the Members of the American Society of Mechanical Engineers and their ladies, in a manner that has been particularly enjoyable to us all, this resolution is presented to record in a more permanent way the appreciation which all have of the enjoyable manner in which the directors have displayed their kindly feelings towards us, and that for the opportunity afforded us of visiting their splendidly equipped club house, and of meeting so many distinguished citizens, we tender hearty thanks.

Among the long-to-be-remembered courtesies extended to the American Society of Mechanical Engineers when in Detroit is that of the Detroit and Cleve-

Digitized by Google

land Steam Navigation Company, for the generously tendered, complimentary use of their magnificent steamer, *City of Cleveland*, for the trip to "Star Island," the Venice of the unsalted seas. For the attentive courtesies shown by all during the excursion, for the opportunity, for the first time afforded many of us, of riding on the clear waters of the Detroit River, we ask that they will accept our hearty thanks.

The American Society of Mechanical Engineers, recipients of most enjoyable and appreciated courtesies at the hands of the Michigan Stove Company, desire to return to that company, its president, officers, and genial representatives, and to all connected with them, a most heartfelt vote of thanks for their considerate attention, transportation, and entertainment at luncheon, as well as for the opportunity that has been afforded us of inspecting works and methods which have largely contributed to make the city of Detroit the important industrial centre it is.

To the Detroit Oak Belting Company the Society desires, by a vote of thanks, to express its appreciation of their efforts to make our visit one of pleasure and enjoyment, by inviting us to visit their works during our stay in the city.

Among the many and generously tendered marks of consideration shown the American Society of Mechanical Engineers during their meeting in Detroit is that of the Detroit, Belle Isle and Windsor Ferry Company, in tendering for our use on Friday afternoon their admirably equipped boat *The Pleasure*, by which to visit the many points of interest along the river front, and for their kindly consideration of our comfort and pleasure we hereby tender our thanks, coupled with best wishes for their success and continued prosperity.

The American Society of Mechanical Engineers has had an opportunity to witness the operation of the system of pipe lines for fire protection which is a notable feature of municipal engineering of the city of Detroit. To Mr. Jas. E. Tryon, Secretary of the Fire Commissioners, and his colleagues, and to the energetic representatives of the department, we desire to return thanks for the exhibition given and the honor conferred upon us.

The American Society of Mechanical Engineers desire to express to the Water Commissioners and to the Public Lighting Commission, by a vote of thanks, their appreciation of the courtesies extended, and for the opportunities which have been afforded us of visiting the admirably arranged departments under their control.

Among the unique and pleasurable experiences of the American Society of Mechanical Engineers, during their meeting in this city, was the visit made to the handsome business offices of Hiram Walker & Sons, of Walkerville, at the invitation of that firm, and for this invitation and for the attention shown us, we beg Messrs. Walker & Sons to accept our hearty thanks.

The American Society of Mechanical Engineers have, during their visit at Detroit, been honored with invitations to visit many of the industrial establishments for which the city is noted, and while it has been impossible for the Society as a whole to accept these various invitations, many of our members have done so, and we wish to heartily thank the Farrand & Votey Organ Company, the Peninsular Car Works, the Michigan Stove Company, the Detroit Dry Dock and Engine Works, the Riverside Iron Works, the Frontier Iron Works, the various Power Stations, and others who have honored us by thus remembering us during our stay in this city.

As no meeting of the American Society of Mechanical Engineers would be complete, or a success, without the laborious efforts of a local committee, so

Digitized by Google

would a series of resolutions be incomplete which did not at least attempt to recognize their hard work, which has made this, the Detroit meeting, a notable success in each and all of its varied features. To some of us the difficulties to be overcome, the innumerable details to be carefully worked out in advance of such a meeting, are not unknown, but to all of us it has been fully demonstrated by our sojourn in the city of Detroit during the past week, how the admirable tact, good judgment, industry, and patience of a local committee have served to make us walk and ride in pleasant places. While words are inadequate to express what we so fully feel, we trust that the consciousness of having so completely contributed to the success of a Society of which we are proud to call them members, of having conducted a series of excursions and entertainments which have left nothing to be regretted, except that they are over, must, as we feel, be their highest reward; but to this all members and guests desire to add their heartfelt thanks, and to join in the wish of Tiny Tim, when he said, "God bless us all!"

These resolutions were passed with acclamations and cordial enthusiasm, the recognition to the local committee being only to be satisfied by a rising vote.

Digitized by Google

DCXXXIV.*

A T-SQUARE AND ITS MOUNTINGS.

BY W. A. GABRIEL, ELGIN, ILL.

(Member of the Society.)

THE T-square shown herewith by the accompanying diagrams was devised by the writer several years ago, and has been in constant use since; and thinking it might be of use or interest to others, it is made the subject of this paper.

The T-square is mounted on a steel guide-bar, and the bar upon adjustable brackets, fastened to the under side of the table which holds the drawing-boards. The drawing-boards are fastened to the table by clamps, about six inches from each corner of the board, as clearly shown at Figs. 192 and 193. The guide-bar can be easily adjusted in height to suit the various thickness of the drawing-boards, by means of screws at the lower ends of the brackets (see Figs. 186 and 195), and the bracket at the front, or working side, of the table is provided with an adjustment, shown at Fig. 188, so that the guide-bar can be moved sideways at that point, the bar swivelling at the other or back bracket. This arrangement allows the T-square blade to be set at the zero point, in case of any distortion of the table or board, or when the draughtsman wishes to change boards on which may be mounted different views of the same machine.

The T-square head, a plan of which is shown at Fig. 184, is made of cast iron, and carries on its under side small steel rolls, that are hardened and ground up true, and which allow it to move freely on the guide-bar. The rolls running on the top of the bar carry the weight, while the others guide the head sideways. The use of three rolls in the manner shown allows the overhanging weight of the head to always keep it free from side-shake when any wear takes place. The head is kept in position, when the top of the drawing-table is set at any desired angle, by a counter-weight, shown in Figs. 187 and 195, and the weight

* Presented at the Detroit meeting (June, 1895) of the American Society of Mechanical Engineers, and forming part of Volume XVI. of the *Transactions*.

Digitized by Google

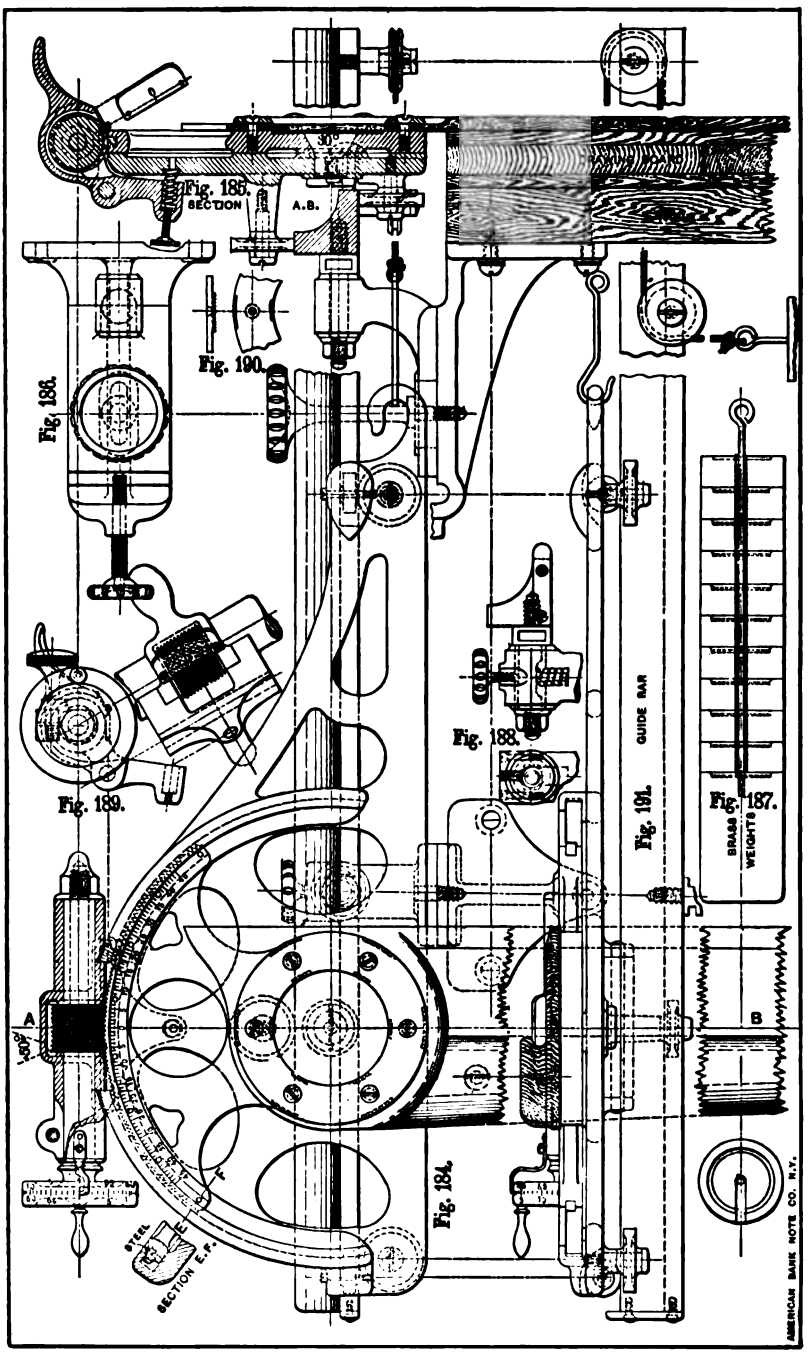

Digitized by Google

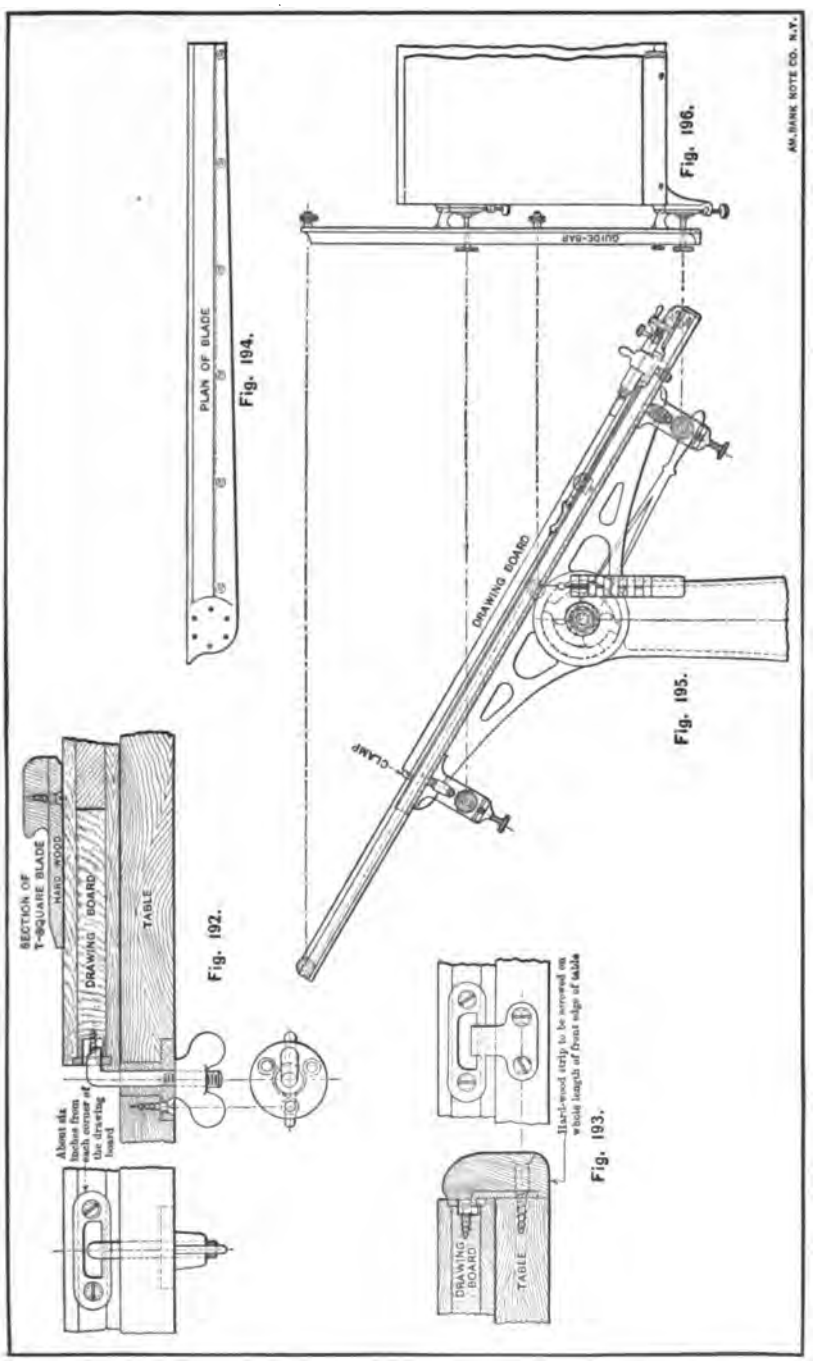

Digitized by Google

is made in sections, so that it can be varied to suit the different angles of the table.

The blade or straight edge has upon it a rib or trough, in which can be conveniently placed the instruments, etc., in use by the draughtsman. This blade is secured to a gear segment, by means of six screws and a thin steel ring which has teeth formed upon its under side; these teeth are clearly shown by Figs. 185 and 190. The teeth are forced into the wood of the blade by the screws, and hold it firmly to the segment. The segment has let into its outer circumference a piece of steel on which teeth are cut. Steel was used, as it was found that the teeth could be cut in it more accurately than was possible in the cast iron.

Each tooth equals one degree, and the worm engaged therewith is held in close contact by means of a spring shown in the section Fig. 185. The worm and its shaft are mounted in a frame, pivoted in such a manner that it is possible to move it out of gear with the segment, and this allows the blade to be moved quickly to the desired angle; and if minutes of a degree are wanted, it is only necessary to revolve the worm and read from the index formed upon a small hand-wheel on its shaft. A clamping screw is provided to secure the worm against accidental movement.

Figs. 195 and 196 show the T-square and guide-bar attached to the table, and the proper position of the counter-weight. Fig. 194 is a full-length detail of the blade.

It may be claimed that this is too elaborate a device for ordinary use, but, in the opinion of the writer, a T-square of this description will be found to pay well in any draughting-room where fine work is done.

Digitized by Google

DCXXXV.*

A PORTABLE DISINFECTING PLANT.

BY W. H. FRANCIS, PHILADELPHIA, PA.

(Member of the Society.)

IN military science it is an axiom to defeat and destroy an army in detail; this is equally applicable to fighting contagious disease, and is attracting marked attention from sanitarians. It is not the province of the mechanic to discuss or pass upon the microbe theory, calling for disinfecting machines, but to apply practically, for everyday use, the facts which bacteriologists and doctors have proved to be true.

At the December meeting of 1893 was presented a paper on "A Modern Disinfecting Plant," † as applied to quarantine stations, to prevent contagion reaching our shores. Supplemental to this article a brief description is now offered of a Portable Disinfecting Plant for destroying epidemic disease in detail, upon its first appearance in our cities. These machines are the outgrowth of a study of the late epidemic of yellow fever at Brunswick, Georgia, and the indifferent means the doctors had to improvise to aid them in the fight, although, it is true, these were the best that could be obtained at the time in a city cut off by strict quarantine. For instance, a box car on one of the railroads was hastily transformed into a steam chamber, steam being provided by the locomotive, and infected articles carried long distances to and from the car. It is greatly to the doctors' credit that with such means they were able to check the ravages of the fever.

The portable plant comprises two machines:

First, the steam disinfector, consisting (as seen by Fig. 197) of a jacketed chamber, car, boiler, and vacuum pump, mounted upon a suitable running-gear. Its operation is as follows:

---

* Presented at the Detroit meeting (June, 1895) of the American Society of Mechanical Engineers, and forming part of Volume XVI. of the *Transactions*.

† *Transactions of the American Society of Mechanical Engineers*, vol. XV., p. 101, No. 562.

Digitized by Google

The steam generated in the boiler at high pressure is reduced by proper valve, circulating in the jacket at low pressure during the entire operation. The infected clothes are placed upon screens, or hung on hooks in the car, which is supported by

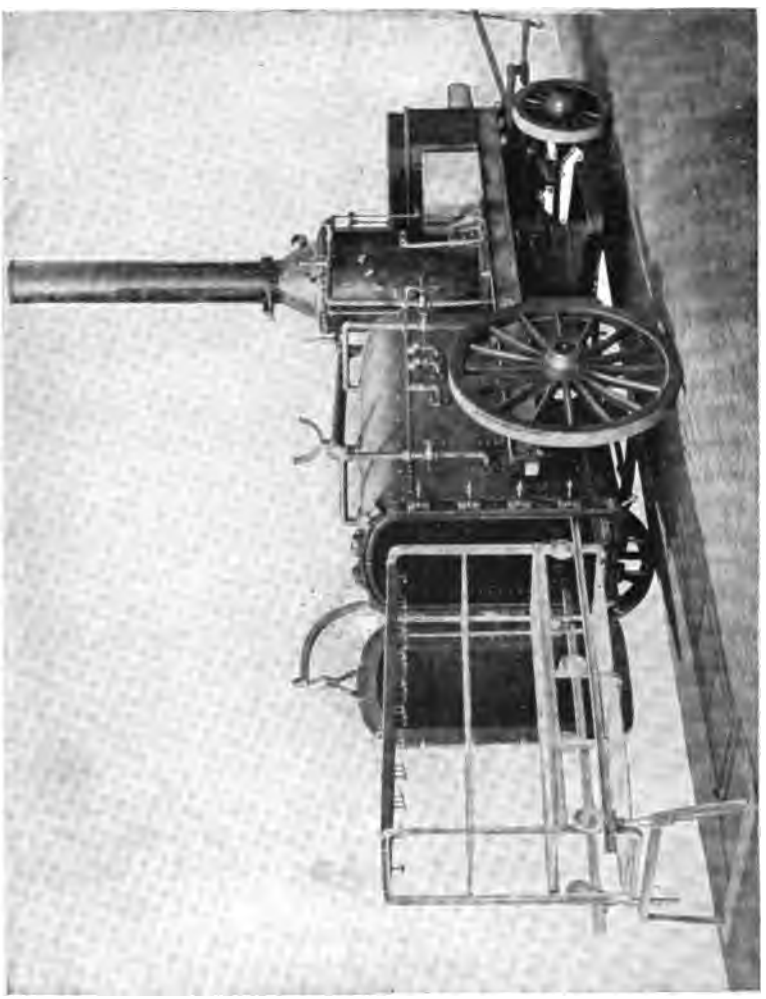

Fig. 197.

a portable track, adjustable for irregularities of roadway, the car then being pushed into chamber, and the door, swinging on crane, closed and bolted, made steam-tight by a rubber gasket. A thermometer records the temperature, and when the clothes

Digitized by Google

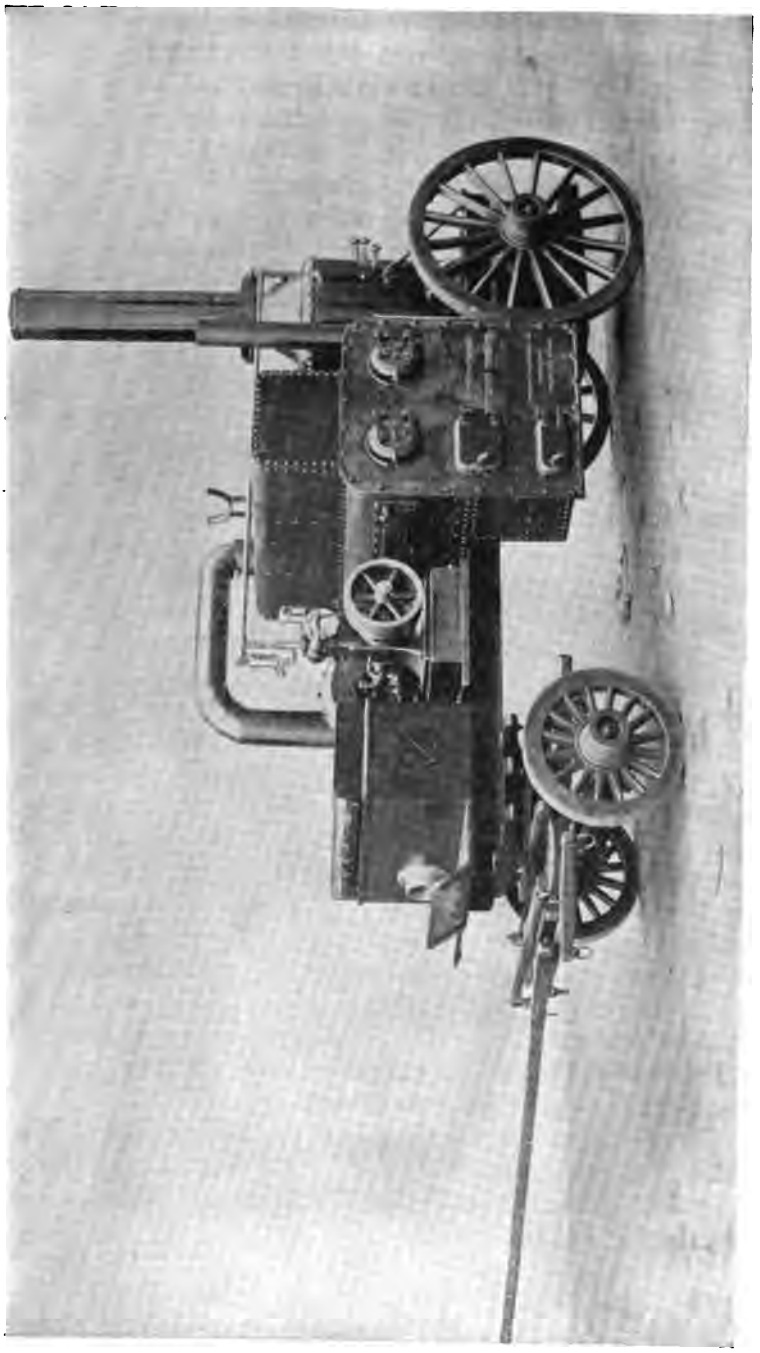

FIG. 198.

Digitized by Google

have reached that of the low-pressure steam, the vacuum pump is started, removing the air (the object of which is twofold, to prevent possibility of life to the microbe, and to give steam greater penetrating effect), after which the steam is admitted to the chamber from the jacket, insuring circulation. The incoming steam strikes upon a three-leaf hood, to prevent being forced directly upon the clothes, and any condensation is carried down the sides of the chamber, preventing wetting and consequent shrinkage of woollens. The exposure is continued for varying time, according to the character of the infected articles, after which the steam in the chamber is discharged through a valve, the door opened, and the car withdrawn.

The car is arranged with removable trays and is open-sided, so as to hold either single or double mattresses, wooden guards of cypress being introduced to prevent them from projecting beyond the sides of the car.

Second, the sulphur fumigator, consisting of a furnace, boiler, engine, and fan, mounted on wheels, as seen in Fig. 198. The sulphur furnace is double, with a fire-box at one end, the sulphur being held in a cast-iron pan under slow combustion, to produce the dioxide ; and to continue the operation without opening the doors and causing rapid combustion, a double-winged stoker is provided by which additional roll sulphur can be introduced to the pan. The fumes travel through the double furnace to a reservoir on top, provided with baffle plates, and are then sucked by exhaust fan (driven direct by a rapid-speed engine), thence through hose into the building being fumigated, the quantity being regulated by a sliding gate valve. Both these machines embody the same principles described in previous paper, and are intended, in case of infection appearing in a certain quarter, to be driven to the infected house, and after the patient's removal, all bedding, clothing, etc., be disinfected in the steam disinfector, after which the house itself be thoroughly disinfected by the sulphur fumigator.

These machines were designed for the United States Marine Hospital Service, Dr. Walter Wyman, Supervising Surgeon-General, in association with Dr. J. J. Kinyoun, one of the able bacteriologists in the bureau.

Digitized by Google

DCXXXVI.*

DESCRIPTION OF NEW FORM OF STERILIZER.

BY A. M. GOODALE, BOSTON, MASS.
(Member of the Society.)

IT seems desirable, before explaining the simple sterilizing apparatus shown herewith, to give a brief description of the routine methods employed in the operating theatre of a modern hospital.

Cleanliness, viewed from the standpoint of a mechanical engineer, and cleanliness as practised in the surgery of to-day, are two entirely different things. The latter is complex, and requires the aid of various instruments and processes, all to the end that the ever-present germ, or bacillus, or micro-organism, may be destroyed. The germ theory, briefly stated, is that fermentation is due to the access to the fermentible substances of particles from the outer world. The particles or micro-organisms are easily destroyed by steam heat at proper temperature, and by chemical agencies. To prevent fermentation or putrefaction in the discharges of wounds has been found possible, and has led to fruitful results.

The surgery which acts against the causes of fermentation, or sepsis, is called antiseptic surgery, and is carried out in various ways. The antiseptic principle is applied:

1. In the preparation of the patient for the operation. This requires, when possible, several days, and need not be described, except to state that absolute cleanliness is attained at the cost of much labor and care.

2. In the preparation of the operating-room the walls are washed with corrosive sublimate, as also the table and other appurtenances. The instruments must be sterilized, as also the dressings.

3. In the preparation of the operator, assistants, and nurses for their various duties, the hands and arms are thoroughly

* Presented at the Detroit meeting (June, 1895) of the American Society of Mechanical Engineers, and forming part of Volume XVI. of the *Transactions*.

Digitized by Google

scrubbed in soap and water, then rinsed in boiled water, then washed in permanganate of potash or oxalic acid, again rinsed in boiled water, then washed in corrosive sublimate, and a final rinsing in boiled water.

The operator, assistants, and nurses wear uniforms which cover the outer clothing, and these, together with the dressings, must be sterilized. For this latter purpose the apparatus herein

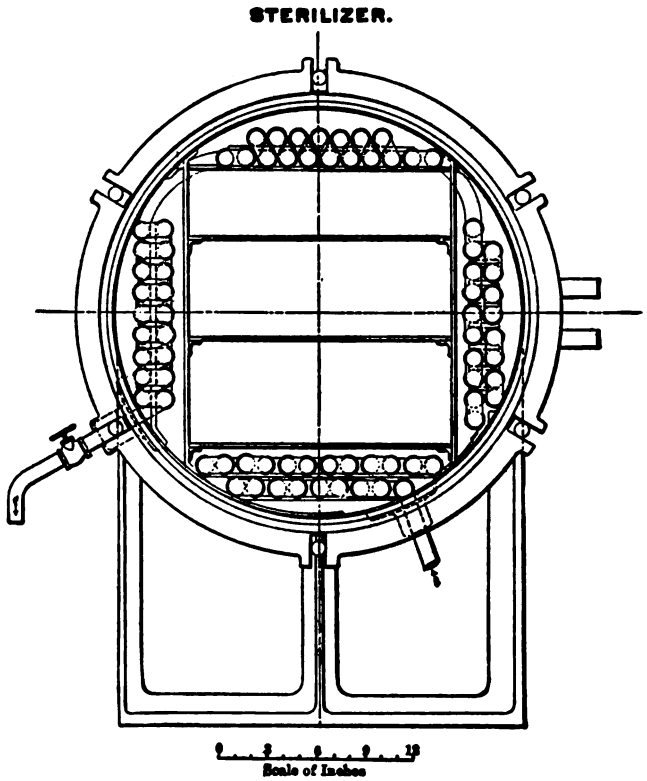

FIG. 199.

described was designed by the writer, at the request of one of the large hospitals, the purpose being to provide a comparatively inexpensive apparatus of sufficient size to sterilize all dressings and materials needed for daily use in the operating theatre and accident wards. The success attained in its use perhaps justifies a description, although but little merit of novelty may be found.

Digitized by Google

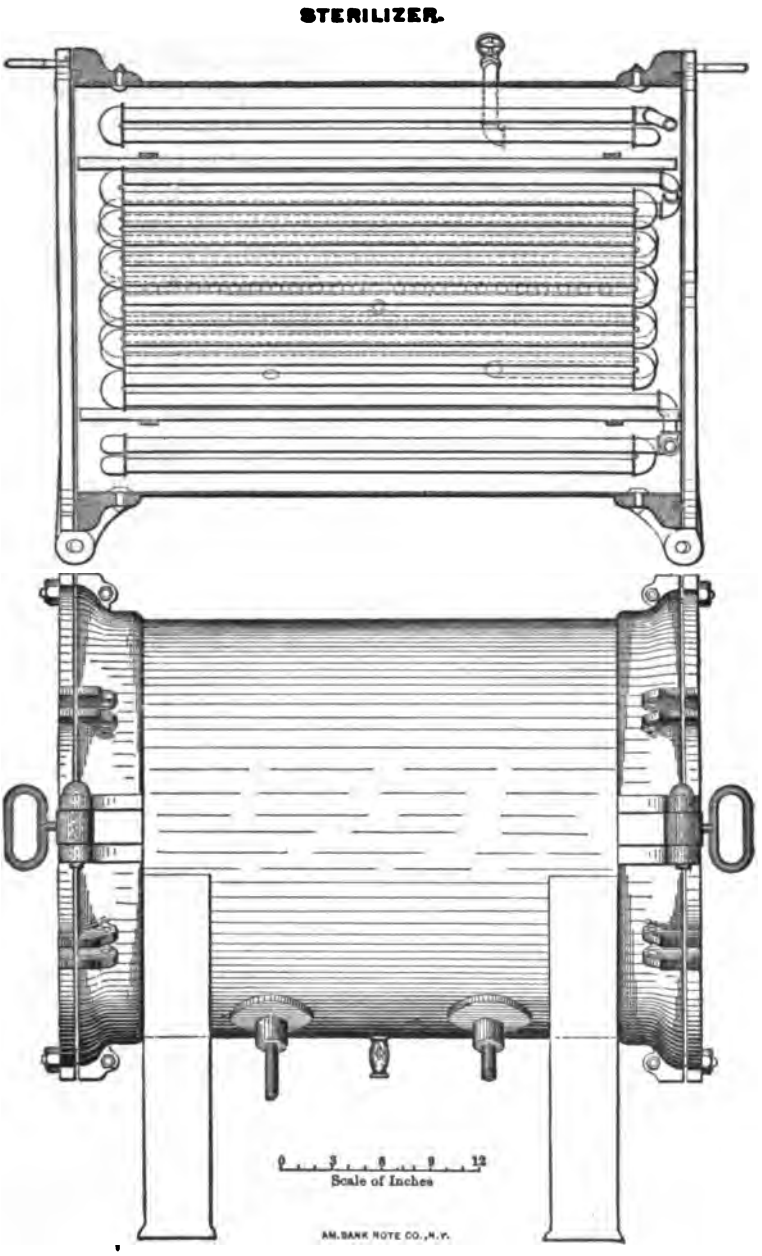

FIG. 200.

Digitized by Google

As will be seen by reference to the accompanying drawings (Fig. 199), the shell is cylindrical, 36 by 24 inches inside measurement, made of ¼-inch boiler plate, containing 200 feet of ½-inch steam pipe, so arranged as to surround a space in the shell 36 by 16 by 16 inches (5⅓ cubic feet), in which are placed trays of wire netting for the material to be heated. On the front end of the shell a cast-iron ring or flange is riveted, in which is a groove for holding a packing-ring. The door is firmly held against the packing-ring by six eyebolts, ⅞ of an inch each (Fig. 200). The door is ¾ of an inch thick in the centre, with rim thickened to ⅞ of an inch. There is a steam gauge, a thermometer which should register to 300 degrees, a pet-cock on top of shell, and a vacuum valve on the rear end of the shell. Connection with the boiler plant of the hospital is made in two ways: first, to the steam-heating coils, the drip for these going to a trap, thence to the sewer; secondly, connection is made so that live steam is admitted in the centre at the bottom of the shell. A drip from the shell is also trapped. The operation is as follows: Dressings or surgeons' uniforms are placed in the trays, the entire tray space being filled. Steam is admitted to the circulating coil, the temperature in the sterilizer rising to about 170 degrees. Then live steam is admitted to the interior of the shell, coming in direct contact with the materials to be treated. A temperature of 260 degrees is desirable, and the pressure of steam may be 25 or 30 pounds. Exposure to live steam for twenty minutes is sufficient, and it is then turned off, the drip from the shell opened, the pressure rapidly falling to 0. The steam in the circulating coils dries out the dressings, so that, as soon as the steam pressure is zero, the door can be opened, the materials taken out, and put in air-tight cases for instant use. This sterilizer is sufficient for the needs of one of the large hospitals in Boston, and can be built for about one-third the cost of anything made for the purpose heretofore.

Most severe tests have been applied to the apparatus, and the results show the exact amount of time and degree of heat necessary to kill the most deadly bacilli. The convenience and economy of its operation are made possible by the operation of drying coils in the same chamber in which the actual work of sterilizing is performed.

Digitized by Google

DCXXXVII.*

RUSTLESS COATINGS FOR IRON AND STEEL.

PAINTS: OF WHAT COMPOSED, HOW DESTROYED, CLASSIFICATION AS TRUE PIGMENTS AND INERT SUBSTANCES, ADULTERANTS, ETC.

THIRD PAPER.

BY M. P. WOOD, NEW YORK CITY.
(Member of the Society.)

WHAT is paint? This question can be answered in a broad way by saying: It is any liquid or semi-liquid substance applied to any metallic, wooden, or other surface to protect it from corrosion or decay, or to give color or gloss, or all of these qualities, to it.

A better definition would probably be, that paint is a compound of a pigment and a liquid, usually applied to any surface with a brush, for the purpose of protection, or to secure artistic effects; which liquid, after undergoing certain changes, in part mechanical, or chemical, or both, has the power of holding the pigment to the coated surface. It is evident that the latter definition would also include those compounds which are applied to many surfaces either hot or cold as a bath, or by immersion rather than by a brush, solely as a matter of convenience or rapidity; and particularly so when metallic members of large size, or with intricate and hidden parts, are to be protected. In the latter case the term coating would probably be the better definition.

The essentials of a good paint, for whatever use intended, are:

First.—That it shall adhere firmly to the surface over which it is spread, and not chip or peel off. It must be non-corrosive to the material it is used to protect, as well as to itself under long periods of atmospheric exposure and chemical changes. It must form a surface hard enough to resist frictional influences,

* Presented at the Detroit meeting (June, 1895) of the American Society of Mechanical Engineers, and forming part of Volume XVI. of the *Transactions*.

Digitized by Google

yet elastic enough to conform to all changes of temperature, or with a coefficient of elasticity approximately as near the material it covers as possible. It must be impervious to and unaffected by moisture and atmospheric and other influences to which the structure may be exposed.

Second.—That it shall work properly during its application, a property which depends largely upon the relative amounts of pigment and liquid; the natures of both pigment and liquid also have influences that govern results.

Third.—That it shall dry with sufficient rapidity. This function depends mostly upon the vehicle or liquid used with the pigment, though the pigment has in many cases an influence, as will be seen further on.

Fourth.—That it shall have proper durability, which is a function both of the pigment and liquid. And as the question of cost is in many cases the governing factor in the selection of a paint, the question of durability may be regarded as the most important one of the list; though it can be imagined that a paint can be durable *per se*, and not be protective in the strict sense of the word, as can be illustrated in the case of a good paint applied to the surface of a sheet of iron coated with rust: the liquid element in the paint will not absorb or neutralize the corrosion which it covers, but will dry regardless of it, and permit the destruction of the metal to progress beneath its coat.

Fifth.—*Covering power*, by which is meant the power of a pigment so to cover the surface to which it may be applied that its protection from decay is not only assured, but that the minimum amount of paint shall effect this purpose.

Master painters and color manufacturers vary greatly in their definitions of the covering power of paints, and are inclined to classify it into "coach painting and house painting," with a distinction whether it is internal and decorative, or external, both protective and decorative.

The covering power is also used to express the power of a pigment to protect the oil from decay, in which case a large amount of pigment and a small amount of oil are used; this description of paint drying more or less "flat," the pigment being exposed to the weather and held in place by the thin film of oil. It is thought by many master painters that this is the most durable and best paint for general use. On the contrary, paints which dry with a gloss have a large amount of oil and a small

Digitized by Google

amount of pigment, in which case the oil covers and protects the pigment.

It may be used to express *the amount* of color upon the surface; as, generally, if a surface has plenty of color upon it the covering power is said to be good. To illustrate this definition: If an iron oxide paint is proportioned so that the ratio between the pigment and the oil is by weight 50 per cent. of pigment and 50 per cent. of oil when the paint is ready for spreading, and the pigment consists of 30 to 40 per cent. of iron oxide, the covering power will be said to be good; but if the same proportions of 50 per cent. ratio between the pigment and the oil be had, in which the iron oxide is only 5 per cent. of the pigment, the covering power would be called poor; and so it would be in the case where 10 per cent. of pigment and 90 per cent. of oil were used. If in the two latter cases the oil contained large or liberal amounts of volatile diluents, the appearance of the surface would indicate a deficiency in the covering power of the paint.

The *covering power* is also commonly expressed in the amount of surface which a given *weight* of paint will cover. A good iron oxide paint will cover nearly twice as much surface as white lead or red lead. The *specific gravity* of the paint also is to be considered in the definition of this power. The lightest paints have the most covering power. White lead is about 6.4 times as heavy as water; iron oxide 5 times; yellow ochre 3½ to 4 times, etc., etc. With this variation it is manifestly almost an impossibility to get the same number of particles of the same size out of the same weight of different materials.

The refracting power of light has much to do with an understanding of this covering power of paint. The greater the refracting power of the pigment is over that of the oil, the better will be the covering power. The index of refraction of air is 1 degree; water, 1.34; linseed oil, 1.48; glass, 1.50 to 1.55; silica, 1.55; feldspar, 1.54; whiting, 1.65; chrome-yellow, 3.00; vermilion, 3.20, etc. There is no exception to the rule that the finer the state of division to which *any* pigment is reduced, the better will be its covering power. Sulphate of lime, barytes, feldspar, silica, talc, whiting, etc., are all of low refractive power, and of themselves, independent of this refractive quality, do not constitute good pigments; though when mixed with the metallic pigments and ground together in the oil the result is a pigment

Digitized by Google

of good covering power, almost as good as the better one of the combination. For instance, 80 per cent. of sulphate of lime and 20 per cent. of zinc white form a pigment almost as good as all zinc white, and 10 per cent. of white lead and 90 per cent. of talc carefully ground give a very satisfactory result so far as relates to the covering power; but all of the above and other kindred compositions, while improving the covering power, are possibly to be classed as *adulterants*, the use of which may be objectionable so far as durability and protective power are concerned, when the question of cost is not considered in connection therewith.

As stated before, the finer the pigment is subdivided or ground, whether as a paste which is afterward thinned with oil or volatiles to a consistency to spread with a brush, or is ground in the oil direct (a process that all pigments will not endure without injury to their color—the scarlet lead chromate, for instance) to the proper consistency to spread, the better will be its covering power.

An ounce of lamp-black, because of the minuteness of its particles, will cover more surface in an effectively protective manner than any known pigment, and one part lamp-black and nine parts sulphate of lime by weight give most excellent results in covering power. Prussian blue, the scarlets, lakes, and others of what can be called "the fugitive colors," on account of their tendency to fade out, possess the *light-dispersing power* which deceives the eye as to their covering faculty, when in reality for actual covering as protective substances they are absolutely worthless. These colors should be denominated stains rather than paints; and generally the only measure of protection from decay or corrosion which accompanies their use is solely from the oil or liquid with which the color is mixed.

The designing of a paint, for whatever purpose to be used, necessarily includes the qualities already mentioned, viz.: adhesion and elasticity, working qualities, drying qualities, durability, covering power. The other quality, the cost, cannot be ignored, and will be duly considered later, as well as what pigments to use for the intended purpose. All pigments do not contain all of the above qualities. The question naturally arises: Is it necessary for a pigment to be pure and unmixed with inert substances, or can a certain amount of these be mixed with the pigment without detriment to it?

Digitized by Google

Experiments of long duration lead to the conclusion that the oxides of iron, lead, manganese, and other strong pigments, can be mixed with large amounts of these inert substances without detriment, and generally to the manifest improvement of the paint as a protective agent on many structures, notably wooden or composite ones. A single illustration will suffice to make this apparent. Oxide of iron is one of the strongest of pigments in covering power. If one ounce of this pigment be spread in two coats over a given surface, say two square feet, so that the surface be completely hidden; and the job be declared a satisfactory one so far as covering power is concerned, and in the second case an ounce of the same oxide of iron be mixed with three ounces of barytes, kaolin, gypsum, etc., or any one of them, and this paint be spread over two square feet of surface as before, it is obvious that the amount of color per unit of surface will be the same in both cases; but in one case there is four times as much pigment as in the other, and in the second case three-fourths of the paint would be inert material. For railway cars and wooden structures the durability of these paints would be in favor of the second case, as well as the cost of the paint. The pigment in this case is the life of the paint, and protects the oil from the decay incident to oxidation from the atmospheric exposure.

Oxide of iron is practically unchanged after centuries of exposure. It induces and promotes oxidation in all organic substances with which it is brought into contact, as well as in nearly all metallic bodies. In an oxide of iron paint it is the oil which decomposes (being the organic matter), the decomposition due to the exposure of the elements being aided by the oxidizing power of the oxide of iron pigment mixed with the oil. This statement holds true only where there has been no chemical change or combination between the pigment and the liquid.

Whiting, sulphate of lime, barytes, kaolin, silica, feldspar, and talc are the principal inert substances used in pigments. Whiting, gypsum, and barytes are the best of the list; the others, grinding greasy, or hard to grind, or of a nature readily decomposed by water, are objectionable. Barytes, from its great weight, is objectionable only when bought by the pound in a dry state, or as a paste or prepared paint in which as an adulterant it takes the place of pure material. The sulphate of lime is no doubt the best of the inert substances to mix with any

Digitized by Google

pigment, all things considered. It should be thoroughly hydrated. As high as 45 per cent. by weight of this substance can be mixed with 50 per cent. of sesquioxide of iron for a pigment. As most of the oxide of iron paints are made by ignition of copperas, and a small amount of sulphuric acid is sometimes left in the oxide which the heat has failed to drive off, from 2 to 5 per cent. of carbonate of lime is added to neutralize the free acid, changing it to sulphate of lime. In this case of proportions, the pigment really consists of 50 per cent. of oxide of iron and 50 per cent. of inert material, all by weight. Any oxide of iron paint which contains hydrated oxide or free SO_2 will deteriorate rapidly by oxidizing the liquids, while any free SO_2 will retard the drying of the paint.

A good paint prepared for spreading in ordinary temperatures upon wooden or composite structures has the ratio by volume of about one-third pigment and two-thirds oil or liquid. The practice upon one of the leading railways of the United States, where the materials purchased for paints amount to over $300,000 yearly, is to allow 75 per cent. of pigment and 25 per cent. of oil by weight for the paints applied to cars and wooden structures.

Experiments determine that the most durable paints are those which contain a large amount of pigment per unit of surface; and that pigment is the best which is strong enough of itself, or with a proper proportion of inert material, to allow liquid enough to be added to it to flow and work well with the brush when applied.

The destruction of paint may be from eight causes: *First*, mechanical injury; *second*, the action of deleterious gases; *third*, chemical action between the pigment and the vehicle or liquid; *fourth*, chemical action between the body covered and the paint, either the pigment or the liquid; *fifth*, the action of light; *sixth*, peeling; *seventh*, destruction by cleaning; *eighth*, water.

Many master painters and manufacturers claim that the destruction caused by cleaning and the action of water are the worst of the above causes. This is true so far as paint applied to *wooden structures* is concerned, and has no relation to the causes which effect the destruction of paint applied to iron or steel structures. As most of the above destructive agents are common to all structures (wooden, metallic, or composite) which

Digitized by Google

depend in a greater or less degree for their preservation from decay or corrosion, upon paint (under which name I class all paint oils, varnishes, japans, surfacers, and mixed paints), it may not be amiss to discuss briefly each of these causes in detail before citing the destructive agencies which relate solely to the corrosion of metallic structures, the prevention of which will require the consideration of other preservative methods than paints, or which may be used in connection with paint to secure the best protective results.

First.—Mechanical injury in a certain sense, as applied to *wooden structures*, is not a serious cause of deterioration of paint. Near the sea-shore the sand has the effect of a sand-blast to cut away the paint rapidly, and in this case the more elastic the paint is, the less will be the mechanical injury. This sand-blast action is quite as effective in the case of iron structures, and as generally they are of a more important character than the wooden cottages or residences, and minor buildings on the sea-coast, its action must be guarded against. If the paint coating is of a soft, spongy nature it will resist the sand-blast, but will absorb moisture from the air, and hasten either the oxidation of the paint or the metallic surface which it covers. Verily, as between the devil (the sand-blast) and the deep sea (the sea-air), it is hard for the engineer to choose into whose hands he would rather fall.

A further injury to metallic structures can be classed under the head of mechanical, viz.: that arising from the expansion and contraction of the various parts from the atmospheric changes which are constantly going on, changes ranging from 40 degrees F. to 150 degrees F. not being unusual. Now, it may be considered an impossibility to proportion a paint-compound so that its coefficient of elasticity will be the same at all temperatures as that of the metal it covers. It may be possible to do this at some temperature at or between 60 degrees and 90 degrees F., or even between + 40 degrees F. and 90 degrees F.; but that any paint in the class of commercial colors will do this at all temperatures is the tale of the salesman, not of the engineer. It may be argued that, these changes coming from the external surfaces of the paint and being transmitted through its coating, it will be the first to adjust itself to the new or varying relation between the metal and the paint, and so will work to the advantage of the paint in making the change, this being in ordinary cases a gradual one. If the paint

Digitized by Google

is of an elastic, close-clinging material, and not a hard, vitreous one, the claim will hold good.

The compounds which most closely partake of this nature, will be spoken of hereafter. An addition to this problem will be had when the strains due to the action of wind, the passage of railway trains, and those due to changes of a sudden and vibratory character, together with the action of snow, hail, and water driven at high velocities, are added to the temperature changes. Over these combinations a little coat of paint is required to stand perpetual sentinel. These latter mentioned strains necessarily come to the metal first, and whatever changes occur in section of the bars or elongation of them by the strain, the paint must accompany them. As these strains are generally of a vibratory or percussive character, it can easily be seen why they should be classed in the list of mechanical injuries. In fact, they are a succession of blows which the structure must withstand, absorb, and extinguish within itself or its connections; the structure then returning to its normal condition, the paint or other protective covering must accompany it, instead of loitering by the way and being grounded or "left" in the chain of operations.

Second.—The action of deleterious gases is very familiar to those who have studied paints and protective compounds. Sulphuretted hydrogen is one of the most common and active of these gases, and is formed in excessive amounts wherever coal is distilled, as for illuminating gas. Sulphurous acid fumes also, being disengaged in the combustion of coal in the many arts, transportation, and manufacturing processes of the day; gases engendered in workshops, being of a compound character carrying ammonia, carbonic acid, nitric acid, and other fumes, are active agents of corrosion to metallic bodies, as well as the paint compounds that cover them. White lead is the pigment most affected by these fumes, the action of the sulphur changing the carbonate of lead to a sulphide of lead; rains or any condensed moisture then washing it away and leaving the surface coated with it exposed to the elements of decay.

Third.—Chemical action between the pigment and the vehicle or liquid. This is an exceedingly important field of inquiry, and largely an unknown one. The siccative and other oils which are in common use for paints are all capable of saponification. It is well known that soda and potash are not the only substances which combine with fats to produce soap, and that

Digitized by Google

almost any of the bases can be combined with the fat acid of nearly all oils to make soap; hence we have iron soap, lead soap, zinc soap, manganese soap, etc. Many pigments are simply oxides or hydrates, in the same way that soda and potash are, and it is strongly suspected that they combine with the oil to form soaps; in which case it will be evident that, after the paint has been left on the surface for a number of years, instead of a pigment held to the surface by the liquid and which has undergone certain changes called "drying," it is in reality a new chemical body consisting of the constituents of the liquid combined with the pigment, or, in other words, it may be a soap.

Fourth.—Chemical action between the body covered and the paint, either the pigment or the vehicle. The chemical changes which may or do take place between the pigment and the liquid, as set forth in Article III., can be supplemented here to embrace those paints which contain pigments, one or more of which give up oxygen or break down in the presence of organic matter, the oil or liquid of the paint. Hydrated oxide of iron (iron rust) oxidizes organic matter (the oil) and gradually destroys it. Oxide of iron paints of all kinds gradually grow darker with age from the oxidation of the oil, this oxidation progressing until either the paint cracks and falls off as a scale on any mechanical disturbance, or is washed away in the process of cleaning or by the action of storms. The chromate of lead, bichromate of potash, the chlorates, manganese dioxide, red lead, and a number of other pigments also possess this oxidizing power to a great degree, but are also possessed of another chemical property which, when these substances are used as pigments and applied to iron and steel surfaces, renders them almost proof against the effects of corrosion.

This property is the power to form on iron and steel surfaces a thin coating of black or magnetic oxide, which so effectually protects the metallic surfaces from corrosion that after the removal of the paint the metal still resists atmospheric effects for a long time, as well as the stronger effect of immersion in sea-water or acidulated waters, sulphurous and other vapors. This action is very obscure and not thoroughly understood; but the fact remains, and extended experiments in this field only demonstrate its presence and usefulness. Practically it is the same coating that the Bower-Barff, Bertrand, Maritens, Gesner, and other

Digitized by Google

kindred processes develop when iron and steel objects are placed in a closed vessel or muffle and exposed for a few hours to a low red heat (1,000 to 1,200 degrees F.) with the action of superheated steam, naphtha, or other hydrocarbon vapors, forming, at the expense of the metal itself, an oxide of varying thickness, according to the period of exposure, which is non-corrosive, and, what is further an anomaly, a coating which is electro-negative to the iron surface it covers, but is also electro-negative or passive to the paint which covers it when the pigments composing this paint are composed of one or other of the above-mentioned oxidizing materials other than the oxides of iron, zinc, tin, or lead. This magnetic oxide power in paint as applied to *wooden structures* is still less understood than its action upon *metallic surfaces*, and may not be of the same importance, as the artistic effect of a fresh coat of paint upon a weather-beaten wooden or brick structure may appeal more forcibly to the eye than any other factor to cause a fresh application of the paint covering.

Fifth.—The action of light. The action of light as a bleaching element is well known in almost all fields of human industry; but the chemical changes which occur between the pigment and the liquid are not well understood, this action being furthermore complicated by the different temperatures to which the coated surface may be exposed, and aided by the effects of sea-air or fumes from various manufactories. We know that certain pigments fade upon exposure, whether applied to metallic or other structures. The pigments which contain organic coloring matter from coal tars, dye-woods, etc., fade more rapidly than those which have a metallic base; but it has never been established that the bleaching of the paint in all cases *detracts* from its durability.

Sixth.—Peeling. Paints vary greatly in their power to adhere to either metallic, wooden, or other surfaces; notably zinc white, which peels under almost any condition or from any surface to which it may be applied. There is no other pigment which possesses this property in so marked a degree, and it is difficult to assign any reason why it should peel so badly. A possible cause is that the zinc white combines with the oil used in the paint and forms one of the compounds known as metallic soap, this particular one being zinc soap, a hard, brittle, non-adhesive substance, easily removed by mechanical injury, water, and in

Digitized by Google

the process of cleaning, etc. Galvanized iron possesses the property of causing almost any paint applied to its surface to peel; in fact, it is one of the worst substances to cover with a pigment in a satisfactory manner. Experiments made by a leading railway company in the United States, in which a number of the best pigments in use by that company for all descriptions of railway work were tried upon galvanized-iron car roofs and other galvanized work, cornices, etc., showed at the end of three years that but one of the list was in any manner satisfactory, and this one was a patented compound whose component parts have not been ascertained. Ordinary trade colors are of the most unreliable nature when applied to galvanized iron exposed to the trying conditions of railway service. Various reasons have been given for this peculiar action of paint upon galvanized iron. One of the most plausible is that the use of sal-ammoniac in the process of galvanizing causes the formation of a thin film of the basic chloride of zinc on the surface of the metal being galvanized, which material, being of a hygroscopic nature, acts as a repellent to prevent the close adherence of the paint to the metal, and the pigment dries as skin over it. Sheet zinc which has not been through the galvanizing tank does not hold some kinds of paint. Sheet lead also is difficult to cover, and paints which take tin and lead will not always adhere to zinc. As a general rule, the strong oxide paints take these metals better than talc, ochre, and the earthy pigments. No positive general statement can be given, and the problem of the adaptability of paint to a metal to prevent peeling still needs study. A paint for the prevention of corrosion in metals should embrace those qualities which will cover both of the above requirements, and the solution to that problem I hope to be able to give.

Another fruitful cause of the peeling of paint is when the several coats are successively applied before the foundation or preceding coat has thoroughly dried, the result being that the liquid in the outer or last applied coats softens the pigment in those previously applied. The resulting mass, containing a notable amount of the more volatile elements of the liquid, beginning to dry from the outside surface, forms a thin but hard or vitreous surface which retards the further evaporation of the volatiles and prevents the access of oxygen from the air, which is necessary in the process of drying. If the surface thus covered has been painted while at a low temperature or during a damp

Digitized by Google

or foggy atmospheric condition, and soon after there is a marked rise in the temperature or a fall in the hygroscopic condition of the atmosphere, then the paint is liable to peel at once, or soon after the change. This effect is hastened in the case where the coating is a heavy one, or one hard to spread by reason of the earthy or inert substances in the pigment, or if benzine has been used as a drier. As a general rule, *the more substances* which enter into a coat of paint, either as pure pigments, inert substances, or in the composition of the liquid, the more liable it is to peel. A small amount of fish or animal or non-drying vegetable oils, though oxidized by the addition of metallic salts and used in connection with linseed or other siccative oils, also hastens and provides for the certainty of the peeling.

A pigment composed of a number of substances, the different materials of which by themselves would form the basis of a good paint, when combined together with the liquid necessarily must undergo a different chemical action than the several members of the pigment would have done had they been used alone. This chemical action is furthermore complicated by the combinations going on in the liquid, which, formed of a number of different elements which act and react upon one another, and mixed with the heterogeneous pigment, develop a series of chemical actions in the mass, the weaker element of which, either the mineral or the organic, is the first to break down or change, the decay of which hastens the decomposition of the others and releases the bond between the paint and the surface over which it is spread, and the peeling process is effected.

That these chemical changes exist in the above stated case cannot be denied, but have not been well accounted for. The fact remains, however, that certain paints peel, and though analysis of the peeled portion may reveal nothing to indicate the reason for the peeling, it is seldom possible to get a sample of the original paint as applied, to compare its constituents with the peeled sample, and the cause is relegated to the hidden drawer of the paint-shop, near which some scapegoat can be found to bear the burden of failure.

Seventh.—Destruction by cleaning. This cause of the deterioration and destruction of paint relates more particularly to wooden structures, railway cars, and kindred objects, than to those of a metallic character. It may be sufficient to say we do not wash

Digitized by Google

down an iron bridge, roof truss, or steamship, with a view to its presenting a clean face for the not too frequent inspection. Almost all the binding materials of dried paints and varnishes are more or less acted upon by caustic and carbonated alkalies, and but little of the soap in the market is free from these substances. The detergents sold for cleaning are all mixtures of sal-soda with lime, pumice, and other inert materials, and the more effective they are for removing dirt, the better they are for the destruction of the paint. If, in the economy of domestic household matters, two removals are equal to one fire, then it may be cited with equal force that two good scrubbings with any washing compound, and most of the soaps of commerce, applied with a stiff brush and by a willing servant, will be equal to the next painter's bill to restore matters to their pristine state. Aside from the element of cost, it is no doubt the better practice, so far as the ultimate preservation of any metallic structure is concerned, that it should be washed clean with some of the detergent compounds of the day to remove the dirt, then sponged with a liberal amount of clean water, then be allowed to dry thoroughly before the new paint is applied; but I must confess, as an engineer, that the above method of painting is a rare occurrence, and that the rule is for the paint to be put on regardless of cleaning the old coat, and, like Charity, trust it to cover the sins beneath.

Eighth.— Water. The destructive action of water upon paint applied to any structure, wooden, metallic, brick, or composite, upon their internal as well as their external surfaces, is very strong, and will rank next in destructive qualities to the detergent soap and scrubbing-brush. Inside painting lasts longer than outside, principally because it is less exposed to the action of water. Direct experiments show that dried linseed and other siccative oils, when applied to a surface alone without pigment, are not resistant or water-repellent. When the oil is well dried, the application of water always causes the oil to assume a shrivelled appearance, showing that it has absorbed moisture and expanded, and disintegration has commenced. If the exposure be long continued, the whole coating of dried oil will slump away from the surface over which it is spread. Rain water, from the sensible amount of ammonia that it carries, increases this destructive action on the dried oil; and the slow wasting away of good paints containing pigments best known to

Digitized by Google

resist aging influences, and which have been hardened by time, can be attributed to this action.

The ordinary test by master painters of the ability of an oil or paint to resist moisture is to coat a surface, usually of glass, and, when well dried, to immerse it in water for a few hours, and note the changes in color and integrity of the paint.

Dr. Dudley's experiments for the Pennsylvania Railroad, on the action of water upon paints, are interesting from the care which was exercised in making them and recording the results. Several samples of a paint designed for use upon cars and wooden structures were made with raw linseed oil and a very small amount of japan; the same liquid being used for all the samples with varying amounts of pigment, all the proportions being by weight. Two coats of these paints were spread upon glass, and allowed to harden for two to three weeks. These samples were then placed side by side, and a small portion of the surface of each covered with a globule of water. This globule was covered to prevent evaporation, and then allowed to stand for twelve to fourteen hours.

No. 1 was the linseed oil and japan alone.

" 2	"	same liquid	90	parts, pigment	10	parts.	By weight.
" 3	"	"	80	"	20	"	
" 4	"	"	70	"	30	"	
" 5	"	"	60	"	40	"	
" 6	"	"	50	"	50	"	
" 7	"	"	40	"	60	"	

When the proportions are higher than liquid 40 parts and 60 of pigment the paint will not spread well with a brush if the liquid is linseed oil and the pigment has the specific gravity of ordinary oxide of iron paints.

At the end of the period named, the behavior of the samples was as follows: No. 1 coating was found to have cleaved off from the glass and had become shrivelled wherever the water had touched it. Apparently the dried linseed oil had soaked up water, much as a sponge acts as an absorbent. On allowing the water to evaporate, the coating dried down again, but not uniformly, and was apparently weakened in texture.

No. 2 showed the same characteristics.

No. 3 showed the same, but in a less degree.

No. 4 did not cleave off from the glass, but showed where the water had stood.

Digitized by Google

No. 5 showed a spot in the same way, but in a less degree than No. 4.

Nos. 6 and 7 showed but very little action.

It can be noted here that linseed oil dried for some two months absorbs less water than freshly dried oil, while very old dried oil has lost this absorbent quality and has become almost water-repellent. To successfully design a paint which will resist all of the previously named destructive agencies, and at the same time resist the destructive action of water (or moisture), is a difficult matter. The field is an enormous one to cover, and but little positive knowledge has yet been obtained, though the investigators and experiments have been legion, and the literature on the subject embraces volumes. Time is an essential factor in the test of the qualities of a paint, and if the experimentor is required to wait five or ten years to determine the merits of any paint, or what effect a slight modification of the proportions has upon any one or more of the eight destructive agencies heretofore stated, a life could be spent and possibly not a conclusion drawn.

Experiments are numerous in the field of designing a waterproof coating to be applied over the pigment which has been found to possess the most preservative qualities, independent of the water-repellent features, but it can hardly be said that the goal has been reached at the present hour. How effectually a thin coating of the proper material can protect the surface of a paint which it covers, can be seen in the lettering of old signboards, which is perhaps an example of the most durable paint of which we have any record. Reference has been made to this subject in a previous paper, No. 598, vol. xv., p. 1021, and need not be repeated here. This protective effect is explained by the well-known fact that lamp-black is one of the best *water-repellents* known; that it is practically indestructible, and being *per se* of an oily or greasy nature, when mixed with a pure oil (linseed in these cases), and being in a measure elastic, it has effectually preserved the surfaces, and not allowed the water to reach the underlying coats of white lead.

If the question of *color* did not to a greater or less degree govern the kind of paint to apply to any important structure we could soon arrive at a solution of the question, how to preserve it. 'Tis told of the fireman, when the question came up as to what color he wanted the fire-engine to be painted, that he

Digitized by Google

replied: "I do not care *so she is red.*" And so with our iron structure: we can paint it with the best paint for preserving it and which will be pleasing to the eye, and then give it a coating of lamp-black to preserve the covering, attaching thereto the familiar notice, "For particulars inquire within."

Having set forth the general character of what a paint should be for the purpose of protecting structures from decay or corrosion, and having indicated the most effective causes which provoke or promote the destruction of the object and its protector, it may not be amiss to speak more definitely upon those materials which enter into paint compounds which yield the best results in general practice; these results being based upon the experience thus far at hand as recorded or accepted data, and not the hypothesis of some person or persons whose single or joint lives may be too short a period, as compared with the life of the structure they are striving to protect from decay, to realize the meritorious features of their experiment.

Engineers as a class are not much less subject to whims than their less prominent brothers in craft, the master painters, color manufacturers, and others, whose trade secrets are too often of too small moment to produce the important results which are claimed for them. Many an important structure has failed from the inadequate means employed to preserve it. Had the original methods employed to protect it been made a matter of record in full detail as to the composition of the protective coating, as well as to how the structure was prepared to receive it, we should be further on the road of engineering experience, and be far better prepared to tell what to do in the practice of to-day in order to secure an abiding result in preservative methods.

The several governments of the civilized world, by the magnitude of their expenditures in the mechanical arts, in the form of ships, buildings, light-houses, docks, and the scores of other metallic structures, either manufactured by themselves or bought for their use to the amount of millions of dollars or pounds sterling annually, from the very nature of things ought to be the repository of the best methods of preventing their decay; and the recorded data should be so full of detail as to the actual results obtained from certain experiments, the favorable nature of which has determined the practice of the several construction and repair departments connected with the govern-

Digitized by Google

ment service, that there should be little question of *what not to do*, even if the more momentous one of *what to do* is undeveloped and uncertain. In most of the navy yards, however, the few rules, or the information what to do in certain cases, is as zealously guarded as a trade secret, obtained at the expense of the public for the apparent benefit of the knowledge-box of somebody connected with that particular navy yard, as any private manufacturer ever practised to keep his trade at home or intact from others' meddling.

The substances in use for coatings or paints for the preservation of all structures, wooden and composite as well as metallic, from decay or corrosion, are:

First.—Mineral or natural asphalt, artificial asphalt, and coal-tar compounds, either applied alone or in combination with each other, and with more or less certain inert substances in use as pigments—viz.: barytes, whiting, gypsum, kaolin, silica, talc, feldspar, and sundry ochres and substances with metallic bases, used to give body, cheapen the cost, change the color, or to correct some suspected or known deleterious constituent, such as ammonia, sulphuric acid, and other compounds which accident or design has placed in the vehicle or liquid, or which may be in the pigment naturally, or have been developed by the process of manufacture. The characteristics of these inert substances when used as pigments will be referred to hereafter.

Second.—Iron oxide paints.

Third.—Zinc and lead oxides and carbonates; sublimed lead; manganese dioxide ore.

Fourth.—Carbon paints; graphite, lamp-black.

These will be considered in turn, and the principal characteristics given so far as experience has determined their merits as protective compounds, or recorded and trustworthy data are at hand to draw conclusions from.

NATURAL AND ARTIFICIAL ASPHALT COATINGS.

Many of the characteristics of both of these materials for protective coatings for iron and steel structures have been given in a previous paper, No. 598, presented at the Montreal meeting (June, 1894), and forming part of vol. xv. of *Transactions*, pp. 1016, 1020–1021, 1039–1040; also their adaptability for the protection of marine work, both anti-corrosive and anti-fouling, given

Digitized by Google

in a second paper, No. 626, presented at the New York meeting (December, 1894), and forming part of vol. xvi. of the *Transactions*, p. 385.

With proper care in their preparation, to eliminate the ammonia and organic matter subject to decomposition and the formation of corrosive acids, and when applied hot to clean, dry surfaces, free from mill scale and warmed to any degree under that of boiling water, they are not only cheap in cost, but seldom need renewal, and form one of the best of protective coatings to resist not only corrosion but decay in all bodies, ferric or other, and prevent, in a great measure, the passage of moisture and the familiar sweating of objects at sudden changes of temperature. Enamelled articles and the japan varnishes have as their base asphalt tempered with some admixture of linseed oil and varnish gums. Some are dried by baking in ovens, forming enamelled ware; others, applied with a brush, dry by evaporation of their solvents rather than by oxidation.

Engineering News, February 7, 1895, p. 86, contains a lengthy and instructive abstract of a paper read at a meeting of the New England Railroad Club, January 9, 1895—"Preservative Coatings for Iron Work," prepared by A. H. Sabin, chemist for Edward Smith & Co., varnish makers, New York city. The article is too long to incorporate with this, but is worthy of reading, and a place on the file of any engineer interested in this subject. Briefly, a coating was prepared from California "Maltha," a petroleum by-product.

The first section of fourteen miles of the Rochester City Water Works pipe was coated with this compound. The pipe, 38 inches in diameter, of steel $\frac{5}{16}$ inch thick, was riveted up in sections 28 feet long and dipped into the "maltha" compound, allowed to dry under atmospheric conditions, then taken to the trench and *riveted up into a continuous line.* The local damage was great in handling the pipe sections, riveting them up, and by the rivets, also by the uncovered pipe acting as footwalk both inside and outside for the workmen, until some 25 per cent. of the original coating was so much damaged that it required to be scraped off and removed, a number of thousand feet of the pipe on both the inside and outside surfaces being thus affected.

This damage to the pipe-coating was repaired by painting it with the P. & B. (trade-mark) brand of paint, the principal element in the vehicle or liquid with which the pigments and

Digitized by Google

asphaltum are compounded being bisulphide of carbon (CS_2). The application of this paint was attended by the most disastrous results to the health of the painters. Those applying it upon the outside of the pipe, in the free circulation of air, were not permanently affected by the poisonous fumes of the volatile, but to the painters inside the confined limits of the pipe, where no circulation of the air was possible to dissipate the fumes, the effect was disastrous. One died (evidently from suicide), two were made hopelessly insane, and a number of the others who barely escaped insanity were affected to a greater or less degree, and have never regained their health, and retain a silly expression of countenance and weakened characters.

The selection and enforced application of this paint, after its effects upon the workmen had demonstrated its dangerous character to life and health, was not only an engineering blunder of the first magnitude, but ought to be classed as an engineering crime; and the parties responsible for it—whether contractors, engineers, or city officials—should not only be mulcted in heavy monetary penalty, but be scourged by the voice and pen of public opinion until their future public or engineering ambitions and practice are forever set at rest.

The second section of fourteen miles of the same sized pipe, for the Rochester City Water Works, was coated with an enamel compound, or special baked japan, differing from the ordinary baking japan, and composed of the purest obtainable asphaltum, the best refined linseed oil, mixed with kauri and other varnish gums, well compounded by experienced varnish makers, and the use of benzine, bisulphide of carbon, and other volatiles other than turpentine rigorously excluded.

The 28-feet sections of the pipe were dipped in this prepared japan, drained, and then placed vertically in an oven 35 feet high, holding 12 sections of the pipe, and baked at a temperature of 400 to 600 degrees Fahrenheit for several hours, the oven making two draws per day. The pipes were found to be evenly coated, and it was almost impossible to tell the bottom from the top. The coating was very thin, but absolutely continuous and closely adherent, not easily scaled off even under the blow of a hammer, and withstood transportation and the work of landing it in the pipe trench without injury.

The drip from the oven was recovered and used again by the varnish makers, Edward Smith & Co., Prof. A. H. Sabin, chemist

Digitized by Google

and manager, director, who furnished the contractors with all the japan necessary, receiving back all that was unused.

This baked japan was removed from the ends of the pipe sections, both inside and outside, in a strip about four inches wide; and when the pipe had been joined, riveted, and caulked, these joint strips and rivets were coated with a compound similar to the enamel in composition, but applied with a brush, and which hardened, within a few days, into a *tough black varnish* (there being no pigment in its composition), that appears from the samples presented to be only in a minor degree inferior to the baked japan coating, and is evidently much cheaper in its application. If the action of "pitting," at the junction of the brush compound with the baked enamel at the junction rings of the pipe does not appear after the lapse of a few years, the ideal anti-corrosive or preservative compound would seem to have made its appearance, even if skilled supervision is required for its application, instead of the haphazard methods in practice in the spreading of ordinary and so-called anti-corrosive paints and compounds.

Engineering News, April 4, 1895, page 226, "Preservative Coatings for Steel Pipe on the Rochester Water Works," contains an interesting criticism, by Willard D. Lockwood, Jr., A.S.C.E., on Mr. Sabin's baked japan or enamel coating, and the "Maltha" coating, as actually applied to the pipe, that will be read with interest by all engineers, as the comparative merits and defects of the two coatings are well set forth, though no mention is made of the calamitous results attendant on the application of the P. & B. paint applied to cover the defects of the "Maltha" compound, and which may well be denominated as a phase of engineering rabies, that not only affected the painters applying it, but evidently reached the officials who enforced its application.

Some additional data relative to the nature of asphaltum will be given under the fourth class, as carbon paints.

IRON OXIDE PAINTS.

The characteristics of these paint compounds have been so fully set forth in the preceding papers that it is superfluous to refer to them in much detail here. Paper 598, vol. xv., pp. 1014–1020; also, paper 626, vol. xvi., pp. 386–408, 409, *Trans-*

Digitized by Google

actions American Society Mechanical Engineers (1894, 1895), describes the chemical action of these paints upon the vehicles with which they are mixed and the surfaces coated with them.

The persistency with which the iron oxide paint manufacturers push their claims for the recognition of their product as the only great preservative compound of the day for all surfaces, metallic as well as those of wood or mineral, and the readiness of some engineers to accept their claims without investigation, notwithstanding the many instances which these paints present of their failure as anti-corrosive compounds, necessarily requires me to illustrate some not otherwise noticeable facts relative to their use.

Scores of important iron structures have been coated with these paints under the best conditions of application, the non-protective character of these compounds being painfully apparent to any person who has examined the Victoria Tubular Bridge over the St. Lawrence River at Montreal; the trusses and lattice iron work of the Brooklyn Bridge; the elevated railway structure of New York City, notably that important portion, completed within the last few years, which carries the Washington Heights and Macomb's Dam roadway over the One Hundred and Fifty-ninth Street elevated railway station, where the combined effects of mill scale, iron oxide paint, sea-air, steam, and the products of combustion from the many locomotives daily passing under the viaduct afford as prominent an example of engineering blundering as the present decade has thus far developed.

So rapidly has corrosion in the latter case developed that it is safe to assume that this important structure will succumb to its effects within twenty-five years from the date of its erection, unless some more drastic remedy is applied to check it than the dabbing of a paint brush dipped in a sixty-cents-per-gallon paint.

Other equally prominent examples of the injurious effect on ferric structures of the use of these iron oxide paints could be cited if needed to warn engineers against their further use as protective coatings. The trade-marks covering these paints are numerous, and whether as kings, princes, potentates, or other euphonious metallic browns, asbestos and silica combinations, their ravages on metallic surfaces are clearly discern-

Digitized by Google

ible at all times, except immediately after the application of a fresh coat to cover the injuries of the past ones.

The color of these oxide paints is in general a pleasing one, and has had much to do with their extensive use. These colors, ranging from a bright red without a brownish cast to that of a disagreeable purplish hue, are the result of the different processes of manufacture of the dry pigment; different iron ores used as the metallic base; also, of the fineness of grinding and the admixture of different amounts of japan drier and turpentine during the grinding. The worst offenders, in a corrosive sense, are those of the brightest color, which, being made from the calcination of copperas, contain so large an amount of sulphuric acid, not driven off by the heat of calcination, as to require the addition of inert substances to correct this defect, notably carbonate of lime, which is changed by combining with the sulphuric acid present in the oxide to a sulphate of lime, of itself not an injurious substance in a pigment. These inert substances (not true pigments) govern the color of the oxide paint to some extent, *but the color is no criterion* of the purity or merit of the iron oxide pigment.

Much stress is laid by the manufacturers of iron oxide paints on the large quantities sold to the national governments of the world, for use on the many iron structures committed to their care and preservation, with a too frequent implication that no other protective covering is effective; whereas, there is scarcely a government bureau of construction and repair in the whole world which does not specially prohibit the use of these paints on any important metallic structure under their control.

To such an extent has this game of iron oxide brag extended that the *Verein zur Beförderung des Gewerbfleisses* (or Society for the Promotion of Useful Arts), Berlin, Prussia, has offered a silver medal and prize of one hundred and fifty pounds for the best paper giving a chemical and physical analysis of the oxide of iron paints in general use for anti-corrosive purposes. This paper will be made public at some date during the present year, and it is hoped will serve as a text-book to instruct the rising corps of engineers upon the question of *what not to use* to prevent corrosion in metallic bodies.

The specifications for iron oxide paints mixed ready for spreading, in use by many of the leading lines of railway in the United States for their freight car and wooden structural work—

Digitized by Google

also used, with some modification in color, for the covering of iron trusses, bridges, roofs, and other metallic work; also adopted by many bridge builders and iron structural manufacturers, architects, and others to coat their work before erection and when in place—are generally about as follows:

Pigment, 75 per cent.; liquid, 25 per cent.; both by weight. The pigment to be composed of sesquioxide of iron, 50 per cent.; carbonate of lime, 5 per cent.; fully hydrated gypsum, 45 per cent. If the sesquioxide of iron is less than 40 per cent., or the liquid less than 23 or more than 27 per cent., the sample is rejected; also if it contains less than 2 or more than 5 per cent. of carbonate of lime uncombined; also if more than 2 per cent. of volatile matter be found in the oil when dried at 250 degrees F. If barytes or other inert substances, color, or material less opaque than sulphate of lime is found, the sample is rejected. Even with so large a quantity of inert material as given above, or 50 per cent. of the pigment, these oxide paints have good covering power, and are still so strong in oxidizing qualities as to materially hasten the decomposition of the oil and shorten the life of the paint. The practice of master painters and color chemists is from year to year to lower the amount of sesquioxide of iron in the pigment, and if another 5 per cent. was taken out of the above proportions, the paint, so far as its application to iron structures is concerned, would be materially improved.

A proportion by volume of 35 to 30 per cent. of pigment and 65 to 70 per cent. of liquid gives a good result with nearly all paints.

If to each gallon of oil there be added as much *dry pigment* as four times the specific gravity of the pigment, the different amounts of pigments which a gallon of oil will require to form a good spreading and covering paint will be as follows: Dry white lead, 26.4 lbs.; dry white zinc, 21.2 lbs.; Indian red, 20 lbs.; yellow ochre, 12 lbs.; umber, 11.84 lbs.; bone black, 10.4 lbs.; freight-car color, 9.20 lbs.; the percentages of the above being 67.40 per cent. by volume of liquid and 32.60 per cent. of pigment. Or, if the white lead was mixed as a paste, one gallon of oil would require 41.80 lbs. of white lead paste to spread well.

The reluctance of the principal manufacturers of iron oxide paints to furnish the public with correct analyses of their prod-

Digitized by Google

uct, either as dry pigments, paste, or color, is nearly equalled by their readiness in quoting the low price at which it can be obtained in comparison with red lead and other pigments.

A noteworthy example to the contrary is found, however, in the data furnished by the Prince Manufacturing Company, who give the analysis of their Prince Bros.' mineral brown paint, viz.:

Peroxide of iron, Fe_2O_3	52.11
Carbonate of lime	0.28
Silica	46.03
Moisture	1.59
Loss	0.04
	100.00

They also furnish the following data, not known generally to engineers, which is of interest enough to place upon record:

Prince Bros.' mineral brown may be used as an effective substitute for the Bower-Barff process upon iron and steel which can be heated to a bright red, by simply mixing the pigment with *resin oil* (which costs about 15 cents per gallon), and painting the mixture upon the iron, then heating it to a bright red. The oil burns off, the peroxide of iron melts into the black or magnetic oxide or rustless coating, the silica in the pigment acting as a flux, and becomes a part of the iron itself. No gas, steam, or muffles are necessary in the process; it is required only to heat the article coated with the above composition; the cost is only nominal for the pigment and oil. This effect is easily shown by thus coating a piece of iron and heating it in a common stove or grate-fire. The process is not patented, but is quite as effective and more meritorious than many of the preservative processes that are thus honored.

A paper presented by Mr. Emil Gerber, Member A. S. C. E., at their May meeting, New York city, 1895, "Preservation of Iron Structures exposed to Weather," gives the result of a personal examination of a number of iron bridges and structures coated with iron oxide and other paints, and compares their condition with each other. It is the strongest and best presentation of the merits of iron oxide paints ever published and will give great satisfaction to those who believe in that sort of a pigment.

Mr. Gerber's examinations were confined to iron structures erected at *inland points*, and in a subsequent communication he

Digitized by Google

infers that, for structures exposed to sea-air, the use of red lead, or some other paint compound, might give a better protective result than the iron oxide paint. This appears to be a singular deduction, as it seems to the writer that any paint which will resist the corroding effects of sea-air would also be the better one to use on inland structures, even if the cost of the paint was the governing factor in the case.

A query arises here, At what parallel of latitude or degree of longitude the line of useful paint effect should be drawn in determining what paint to use to protect the structure?

The iron oxide paints used on the structures examined by Mr. Gerber appear to have been made from a red hematite ore, prepared without roasting by simply being ground fine, and mixed with boiled linseed oil at the point where it was used. Its color was a brown purple. The chemical composition of the pigment, from an analysis submitted by the manufacturers, and one from an independent source, is of interest, as showing the sublime faith of the advocates of iron oxide in the protective qualities of comparatively a pure iron, minted into a paint and spread over another ferric body to preserve it from corrosion.

Substances in the Pigment.	Manufacturers' Analysis.	R. W. Hunt & Co.'s Analysis.
Sesquioxide of iron, Fe_2O_3, the chemical equivalents being 70% iron and 30% oxygen.	93.68	92.40
Silica	3.20	3.36
Alumina	3.06	1.69
Lime	0.00	0.84
Organic and volatile	0.00	0.85
Magnesia	0.00	0.48
Sulphur	trace	0.029
Loss	0.06	0.351
	100.00	100.00

A comparison of this pigment with the specifications mentioned above (p. 685) may account for the anxiety manifested by the bridge engineers at the appearance of corrosion on the structures erected by them, the preservation of which, by the use of a paint of *their own selection*, was supposed to be of importance enough to warrant an effort to secure the best result from a protective coating at least commensurate with the engineering ability expended upon the design and erection of the structure.

Mr. Gerber cites, that a number of analyses of iron oxide

Digitized by Google

paints, ordered from the same manufacturers at different times, varied so greatly in the composition of the pigment and the wearing qualities of the paint as to finally warrant their rejection; that the exact composition of the paints when applied was unknown, and when the early decay of the paint was manifest no records were available to prevent a repetition of the failure. And the writer adds, neither was there any confession on the part of the engineer as to how far the element of "Cheap John" had entered into the selection of the paint and its application.

A comparison of Mr. Gerber's deductions with the results obtained by the use of *graphite pigments*, as per samples presented for examination at this meeting, will be of interest to the members of the A. S. M. E., and may prove a partial solution of the vexed question, "What is the best pigment to use to prevent corrosion?" and will do much to remove the matter from one of argument and experiment to that of practical use.

ZINC AND LEAD OXIDES.

Oxide of zinc or zinc white.—This pigment as a preventive of the corrosion of iron is in a great measure removed from consideration, notwithstanding its cheapness and desirable color. Its tendency to peel or flake off from metallic surfaces, its early decomposition when exposed to external atmospheric influences, and its tendency to form with the oil a zinc soap compound which is easily washed away—all these difficulties combined have rendered its use of the most unsatisfactory character.

Mixed in equal parts with white lead and ground with pure boiled or raw linseed oil, its use is in a measure satisfactory for house painting, either for inside or external work. So combined, its use is very general in all of the tinted or colored paints which crowd the market under many trade-mark names, with varying qualities of usefulness and durability.

When mixed with the red oxide of lead in the proportions of one-quarter to one-third zinc to three-quarters or two-thirds red lead, and ground together in raw linseed oil, it forms a very durable and effective coating for iron surfaces, either as a protection from corrosion, or as an anti-fouling compound for surfaces wetted in sea-water. (See *Transactions* A. S. M. E., vol. xvi., pp. 400–403, Report of Paint Tests, U. S. Navy, 1885.) When so mixed, the "setting" action of the red lead is delayed, about

Digitized by Google

the same as when lamp-black is mixed with red lead. An ounce of lamp-black to a pound of red lead delays the setting of the *red lead paste* some thirty days. Japan driers can be added at the time the oil is added to thin the paint for application, in order to make the paint quick-drying.

WHITE LEAD (HYDRATED CARBONATE OF LEAD), SUBLIMED LEAD ($PbSO_4$), LEAD OXIDES, RED LEAD (MINIUM), PYROLUSITE, MnO_2 (OR MANGANESE DIOXIDE ORE).

WHITE LEAD.—*Hydrated Carbonate of Lead.* The native anhydrous carbonate is also called white lead ore or cerusite, $PbCO_3$, specific gravity 6.465 to 6.480, and is found in various parts of the world.

There are two methods of preparing white lead pigment. In the older or Dutch method, thin sheets of lead are placed over gallipots containing a weak acetic acid (water with 2½ per cent. of strong acid), the pots being imbedded in fermenting tan-bark, the temperature of which varies from 140 to 150 degrees F. A quantity of vinegar, containing not more than 50 pounds of strong acetic acid, converts 2 to 2½ tons of sheet lead into the carbonate in a few weeks. The lead is neither oxidized nor carbonated at the expense of the acetic acid. The oxygen is derived from the air, and the carbonic acid from the fermenting tan-bark. The acid serves to dissolve the oxide of lead and convert it into a basic acetate, which is easily decomposed by carbonic acid, the acetic acid being thereby set free to act upon another portion of the oxide of lead.

This is shown to be its mode of action by what takes place in the more modern process, in which oxide of lead (*litharge*, the scum of silver ore, called also *massicot*) is mixed with water and about one per cent. of neutral acetate of lead—sugar of lead $(C_2H_3O_2)2Pb$ or $Pb''O,C_4H_6O_3$—and carbonic acid gas is passed over it. In this manner the oxide is quickly converted into excellent white lead.

The nitrate of lead has also been employed in this process instead of the acetate. White lead is often mixed with barytes, gypsum, and oxide of zinc to render it less liable to be blackened by the action of sulphuretted hydrogen; the addition of whiting, sulphate of lime, and other of the inert pigments being readily detected by the change in its specific gravity when dry,

Digitized by Google

and by various methods of analysis when ground in oil either as a paste or a paint. A comparison of its combining power with oil as compared with other pigments is given elsewhere.

White lead, when pure and carefully ground with pure oil, without drier, and allowed to take its time to dry thoroughly before another or the second coat is applied, forms a very effective coating to prevent decay in wooden structures or corrosion in iron. The pigment being held to the surface coated by its combination with the liquid, the oxidation of the oil from atmospheric exposure leaves the pigment free to come away as a fine powder; and in cases where the paint has been exposed for a long period without being dressed with a coat of oil, the pigment will be found to be quite easily removed by passing the hand over it.

When protected from the direct action of the elements and the sun, as on the under side of cornices, etc., the paint will be found hard and resistant after the lapse of many years. Its color readily shows the progress of any decay or corrosion beneath it, and this virtue alone causes its rejection as a protective coating, even if the cost of it was of no consideration.

Many instances of its effectiveness as applied to iron to prevent corrosion can be cited. One of them, from the prominence of the circumstances, is here given (restated from vol. xv., p. 1015):

The iron material in the old Hammersmith Bridge across the Thames at London, Eng., was bought to use as false work at the new Forth Bridge, Scotland. The iron, after sixty-two years of service, was as good as new. Many of the parts were inaccessible, and had not been repainted since their erection. Pure white lead paint was what had preserved them.

Light-houses, beacons, and signal stations at numerous points on the coast in all parts of the world show, even in their exposed positions, the protective power of good white lead paint. A condition precedent to its application should be the removal of all scale and grease, an absolutely dry and clean surface, and a clear, bright atmospheric condition during the drying.

Sulphite of Lead.—$PbSO_3$, prepared by the double decomposition, or by passing sulphurous oxide into a solution of neutral plumbic acetate, has been proposed as a substitute for white lead. It is a white, insoluble, anhydrous powder, which, when heated, gives off sulphurous oxide and leaves a mixture of

Digitized by Google

sulphate and sulphide. There is no record of its qualities as a protective agent on any structure that would lead to its general use in preference to white lead.

SUBLIMED LEAD, $PbSO_4$ (WHITE PAINT).—A new preparation of lead, a by-product obtained in the smelting of non-argentiferous lead ore, is coming into prominence as a substitute for corroded white lead prepared by the Dutch process as a pigment. It is also known in the trade as Joplin lead, from its place of manufacture, Joplin, Mo.; also as Picher lead, from the name of the manufacturing company. It is made in two colors: white, used for all colors incident to the use of ordinary white carbonate of lead; and blue, which is a preferable color when used as a pigment for iron, or as a material in the manufacture of rubber, etc. Whatever good qualities the white has, are also shared by the blue. The chemical composition of sublimed white lead is a sulphate and an anhydrous oxide of lead, both amorphous. Incidentally, there is a small percentage of zinc oxide in the pigment, the Missouri lead ores containing a small amount of zinc; but it is generally conceded that the zinc oxide is no detriment to the lead pigment.

The sublimed lead is prepared in special furnaces, in which the mineral is roasted, and is one of the products of sublimation and partial oxidation of galena ore with *bituminous coal* as a fuel, and owes its dark color to the lead sulphide and carbonaceous matter in it. The galena ore is first smelted with raw coal and slacked lime in a furnace, using an air-blast to obtain the required heat; the hotter the fire the more lead is volatilized, and the more "fume" is produced. The products of this smelting are pig-lead, pasty slags containing more or less lead, zinc, and other constituents of the galena ore, and the "fume." The latter is drawn off by an exhaust fan through a settling chamber to a bag house, which contains a large number of woollen bags for filtering the fume out of the gases. This "fume" is a lead-colored, impalpable powder known as "blue powder." It is ignited and allowed to burn for several hours, which converts it into white, coherent crusts. These crusts, with some oxidized ores and hearth slags, are next charged into a special furnace with a very hot coke fire. The products of this smelting are pig-lead, slags poor enough in lead to be thrown away, and the "fume," which in this case is perfectly white and in a fine state of subdivision, suitable for a white pigment, and is sold as such,

Digitized by Google

either dry or ground in oil, as is usual with carbonate or white-lead products.

The process is the same in principle as used in collecting the oxide of zinc for use as a paint. The use of "fume" from the smelting of lead for a paint is very old; Bishop Watkins, in his scientific writings in 1778, mentions the use of the gray fume, but its color was then objectionable.

An analysis of some samples of the white powder gave—

Insoluble	0.08	0.08
$PbSO_4$	65.46	65.00
PbO	25.85	25.89
ZnO	5.95	6.02
Fe_2O_3	0.03	0.03
CaO	0.02	0.02
CO_2	1.53	2.00
SO_2	0.04	None
H_2O	0.69	0.85
	99.65	99.89

Some 4,000 to 5,000 tons are yearly manufactured by the Picher Lead Company, Joplin, Mo., the sale of the sublimed lead as a by-product enabling their smelters to be kept in operation while the surrounding smelting works were closed on account of the low price of pig-lead.

The process is patented, and known as the "Lewis and Bartlett Bag-Process of collecting lead fumes," and has been mentioned and more or less described as follows:

Mineral Resources of the United States, 1883–4, p. 427; *Engineering*, 1884, p. 495; *Engineering and Mining Journal*, vol. xl. (1885), p. 4; *B. und H. Zeitung*, vol. xlvii., p. 346 (describes the works of the Bristol Sublimed Lead Company, Bristol, England, where the process is in operation); *Prerass Zeitsch*, vol. xviii., p. 195; *Fresenius Zeitsch*, vol. viii., p. 148; *Transactions of the American Institute of Mining Engineers* (Washington meeting, February, 1890), illustrated.

The product is sold under strong guarantees as to quality and merit by the Picher Lead Company, Joplin, Mo. It is claimed that it is but little if any affected by ammonia or sulphur fumes, products of combustion, etc., and that it does not crack or peel when applied to metallic or mineral surfaces. Its covering power is good, and, judging from the samples presented to this meeting, it appears to be able to withstand the gnawing

Digitized by Google

tooth of time as well, if not better, than any proposed substitute for white or red lead which has yet been presented for the consideration of engineers.

The samples in the bottles are the dry powders of the white and of the blue pigments. The sample of iron piping is painted on one end with *two coats* of red lead, and on the other end with one coat of the blue lead pigment, to contrast the covering powers.

The samples of wood coatings are from a new picket fence, painted in 1892. Two alternate pickets in the fence were painted with the best corroded white lead and with the sublimed lead, upon the same day, by the same painter, using the same oil in both kinds of paint, applied with separate brushes, from separate paint pots, and care taken to have all the conditions as uniform and unbiassed as possible. The appearance of all the samples is decidedly in favor of the sublimed lead.

I am under obligations to C. V. Petraeus, chemist and metallurgist at Joplin, Mo., for the samples presented and a description of the process and works of the company.

RED OXIDE OF LEAD, Pb_3O_4 (MINIUM).—This oxide is found native in various parts of the world, mixed with other ores of lead, and probably resulting from their oxidation. In some localities it accompanies cerusite or white lead ore.

When prepared for analysis, or when the commercial article is freed from the protoxide by digestion with a solution of acetate of lead, it contains 90.63 per cent. of lead, and 9.37 per cent. oxygen, numbers agreeing exactly with the formula Pb_3O_4. It may be regarded either as a compound of the protoxide and peroxide of lead, $PbO.PbO_2$, or perhaps of the protoxide and sesquioxide, $PbO.Pb_2O_3$, analagous to the magnetic oxide of iron. Its specific gravity ranges from 8.6 to 8.94.

The commercial red oxide of lead is formed when the protoxide is kept at a low red heat for a considerable time in contact with the air; also, after the previous formation of hydrated protoxide and basic carbonate of lead, when lead shavings are strewn upon water, the vessel being loosely covered and set aside for some months, the formation of red lead taking place upon the surfaces of the lead exposed to the air.

It is largely manufactured in England in specially constructed furnaces, on the hearth of which the lead is melted and kept at a low red heat, and continually stirred to allow oxidation to

Digitized by Google

occur. The *massicot* so formed during the twenty-four hours of exposure to the heat is taken out, ground to a fine powder and washed, and again exposed in the same furnace for forty-eight hours to the same low red heat, until a sample taken out appears a dark red while hot, and a bright red when cooling. The furnace is then closed and left to cool slowly, a condition most essential to the success of the operation.

In Germany, the conversion of the *massicot* into red lead is effected not upon a hearth, but in a peculiar barrel-shaped vessel open at both ends. It is sometimes necessary to repeat the operation by the German method to improve the color.

The carbonate of lead, $PbCO_3$, may also be used instead of the *massicot* for conversion into red lead; but when the temperature is properly regulated, *another* pigment is obtained, called orange lead. Red lead thus prepared, which, however, retains a little carbonic acid, is a pigment known as Paris red.

There are other methods for preparing red lead in small quantities, not necessary to describe, as the principal methods for furnishing the commercial article are by the above processes.

Commercial red lead contains all of the foreign metallic oxides —such as the oxides of silver, copper, and iron—with which the *massicot* or *litharge* used in preparing it is contaminated. It is also adulterated with red oxide of iron, boles, or brick-dust; these substances remain undissolved when the red lead is digested in warm dilute nitric acid; boiling hydrochloric acid extracts the sesquioxide of iron from the residue. When red lead thus adulterated is ignited, there remains a mixture of yellow lead oxide and the red substances which have been added to it.

The use of red lead as a pigment is possibly of earlier origin than any of the oxides of iron, ochres, and other substances, natural or artificial, of which we have any record, unless it be asphaltum or lamp-black. The many miscellaneous pigments which have come forward, been tried, and found wanting in some one or other of the qualities which constitute a good paint are almost numberless. There is no other color pigment whose use as a protective covering to wood, brick, stone, or metal has been so uniformly satisfactory and successful as red lead, and any failure to fulfil its mission can be traced directly to some agency foreign to the lead itself, used either in its preparation or in the methods of its application.

The characteristics of red lead, its application, and other qual-

Digitized by Google

ities as a preservative coating for ferric and other surfaces have been so fully set forth in a previous paper (Montreal meeting, June, 1894, *Transactions* A. S. M. E., vol. xv., pp. 1013–1022) that it is unnecessary to repeat them here.

Mention is made (same volume, pp. 1027–1028) of the experiments of Sir William Thompson upon the effect of manganese dioxide ore (pyrolusite, MnO_2) as a pigment for the preservation of iron. Experiments still continue upon this substance, the merits of which are quite fully set forth in the claims of the English patent, No. 22,338, November 22, 1892. Several other substances also possess this magnetic-oxide-forming power upon the surface of ferric bodies—viz.: scarlet lead chromate, the chlorates and bichromate of potash—but none of them to the same remarkable degree as pyrolusite, which can be produced in quantities to warrant its use as a pigment. It is strong enough in covering power and oxidizing qualities to warrant the admixture of other pigments which do not possess this *magnetic-oxide-forming power*, to allow for any change in the natural color of the manganese, which is a dark steel gray, sometimes bluish; other samples are an iron black. Its specific gravity is 4.819 to 4.97 when pure. Analysis of a number of samples of pyrolusite yield—

Red oxide of manganese	84.05 to 87.00
Oxygen	14.58 to 11.45
Sesquioxide of iron	1.80 to 0.40
Alumina	0.30 to 0.00
Baryta	0.67 to 1.20
Lime	Traces
Silica	0.80 to 0.51
Water	5.80 to 1.12

The inert pigments in the manganese ore are so small in amount that they are not detrimental to the pigment. The sesquioxide of iron is readily removed if desired, but so far as the experience with the manganese pigment has gone, the iron has not been found to exert any unfavorable result. Like many other instances in nature, its oxidizing effect appears to be dominated by the oxide of manganese, which produces the first change on the surface of the iron in the form of the black or magnetic oxide, but does not take the second step, or change to the sesquioxide or scaling point.

The combination of red lead and manganese dioxide pigments appears to be favorable to each other. The manganese does not

Digitized by Google

possess the setting power which red lead has to perfection; the presence of the manganese retards this setting power, and enables the *combined paste* to be kept for some thirty days without hardening, much as the presence of lamp-black does with red lead, viz.:

One ounce of lamp-black added to one pound of red lead, and mixed together dry before the oil is added, changes the color to a deep chocolate, and prevents the red lead from taking its initial set with linseed oil as quickly as when mixed with oil alone. This compound will remain mixed in a paste form for thirty days without hardening. If rapid drying of either the manganese or lamp-black compounds is desired, japan drier can be mixed with the oil used to thin the paste before application with the brush.

This magnetic-oxide-forming power in the above named pigment is very obscure, and being comparatively a recent discovery, has not received the attention which its importance demands. We are cognizant, however, of the fact that it exists, and the pigments which have this unknown power, in themselves alone or in combination with each other, may be properly classed as *magnetic oxide paints* in distinction from those called *non-corrosive* in the trade definition of that term. These magnetic oxide paints appear to be passive to the chemical changes which attend the drying of paint so far as oxidizing the organic matter in the liquid or oil after it has set or dried thoroughly.

The formation of magnetic oxide upon the surface of iron and steel by the action of manganese is of extensive application in the arts, where finished articles in iron or steel are plunged into a bath of melted nitre containing a small amount of the peroxide of manganese, and, after but a short exposure, the articles become oxidized with a permanent coating of a deep bronze color, which sustains mechanical injury, such as blows or hard rubbing with a cloth, and are impervious to attack from ordinary atmospheric conditions.

CARBON PAINTS—ASPHALTUM, GRAPHITE, AND LAMP-BLACK.

The fourth class of preservative pigments—viz.: asphaltum paint, in contradistinction to asphalt coatings as referred to heretofore (page 679), graphite, and lamp-black—constitute the *carbon group*, whose characteristics are as strongly marked as either of the three preceding ones, and exceed them in respect of

Digitized by Google

not being reduced to a lower plane of resistance to decay by oxidation (or slow combustion), and, it may also be said, of existence, by quick combustion or fire.

Carbon as an elementary substance remains unchanged through all the centuries, and when combined to a greater or less extent with organic matter subject to decay, it asserts its rights as a preservative agent and ensures a long life to any substance with which it is compounded or placed in contact.

The bricks which formed the hanging gardens and walls of Babylon and other Cities of the Plains thousands of years ago were bonded by natural bitumen or asphaltum, the thin layers and coatings of which are found to-day, unchanged, in vast quantities, in the soil, while the brick and stone which they bonded have perished.

There is trustworthy evidence that the Egyptians and earlier races of mankind understood the art of preparing this natural product so that it could be applied cold with a brush as a paint instead of as a coating applied with a trowel or mop. What the liquid or vehicle was which was mixed with the bitumen when it was used as a paint there is no evidence other than the assumption that it was linseed oil, as the use of linen for garments was universal, and of oil for food, the latter being made from olives and other vegetable products by placing them in a bag and subjecting them to pressure by piling stones upon it. The presence of the flaxseed led to the extraction of its oil for food; the siccative nature of the oil, being soon apparent, naturally paved the way for its use as a coating for domestic articles, and paint was born, long anterior to the time when the successors of Tubal-Cain were casting and beating into shape the sacred vessels for the Tabernacle upon the Plains of Zeredatha.

The wrappings of the mummies were prepared by saturating them with bitumen and some solvent, possibly poppy-seed oil and natural naphtha from the wells and springs which abounded near the lakes where the bitumen was obtained ages ago, which were gray with the lapse of centuries when Moses stood before Pharaoh and pleaded for the freedom of his race.

The characteristics of asphaltum as a ferric coating are briefly given:

Asphalt or mineral pitch, specific gravity = 1 to 1.68, melts at 100 degrees C. = 212 degrees F. According to Boussingault (*Am. Ch. Phys.* [2] lxiv. 141), "is a mixture of two defi-

Digitized by Google

nite substances, viz.: *asphaltene*, which is fixed and soluble in alcohol; and *petrolene*, which is oily and volatile. The greater part of the latter may be volatilized by distilling the asphalt with water."

It is the *petrolene* that gives the cementitious or bonding value to compositions into which it enters. Bermudez asphalt is about 2 to 3 per cent. purer than Trinidad. Samples of Bermudez analyze 97.22 per cent. of materials soluble in bisulphide of carbon. A large amount of these materials is also soluble in ether, showing that the bitumen contains large amounts of petrolene.

Petrolene in Bermudez = 81.63.
" " Trinidad = 80.01.

Egyptian asphalt is the purest of all the qualities of asphalt, but is not procurable at present in commercial quantities required for pavement or pigment coatings, but is used in the finer qualities of japanned or enamelled wares.

Asphalt yields by dry distillation a yellow oil, consisting of hydrocarbons mixed with a small quantity of oxidized matter. It begins to boil at 90 degrees C., but gradually rises to 250 degrees C., giving oils of specific gravity during the boiling, viz.: 90 degrees C. to 200 degrees C., sp. gr. = 0.817 (at 15 degrees C.); that which boils between 200 degrees C. and 250 degrees C., sp. gr. = 0.863 (at 15 degrees C.); both portions giving by analysis 87.5 carbon, 11.6 hydrogen, and 0.9 oxygen, which is nearly the composition of the oil of amber.

These asphalt oils, treated with sulphuric acid and then washed with potash and subject to dry distillation, yield a number of oils which are *insoluble* in water, or strong nitric acid, and are but little affected by strong sulphuric acid, but are very soluble in alcohol or ether.

It is the writer's opinion that the future water-proof anti-corrosive paint will be made from these asphalt oils as the medium combining some of the carbon group of pigments, and that the drying qualities will be had by using some of the strong metallic salts, peroxide of manganese, umber, dioxide of manganese ore, red lead, or litharge, all of which are available agents to aid in oxidizing the oil; and it is possible that some of the oxidizing or corrosive energy of the iron oxide group may be utilized to act as a drier, and, when this point has been reached, become a

Digitized by Google

passive agent instead of a corrosive one to the paint and the metal which it covers.

There are a number of paints upon the market extensively advertised as asphaltum paints, or under other fanciful trade-mark names. The principal merit of some of these consists more in the name than the quality of the paint. If it is once considered that only about ten per cent. of asphaltum enters into the composition of the well-known street pavements, and that so little quantity as this amount, however it may govern the other constituents of the paving compound, has to be put in place or applied hot, and cannot be used or compounded in any other manner, it may be apparent that, notwithstanding the catch-penny name, really but little if any asphaltum of either high or low degree ever enters into the composition of any of these paints.

It is the writer's opinion, based upon an examination of many of these paints, that there is not as much as five per cent. of asphaltum in the composition of any brand of such paint upon the market. Even with this small amount, and with the best of boiled or raw linseed oil as the vehicle for the pigment, the paint is difficult to dry without the use of strong metallic salts mixed with the oil to aid its oxidizing or drying quality; and if a quick-drying paint is wanted, these oxidizing materials are added in such amounts as to materially affect the life of the paint.

When the color of the paint is other than black or steely gray, it may be doubted if any asphalt will be found present under the closest analysis; and the red and brown colored samples will be found to rely almost wholly upon some oxide of iron as the base of the pigment, under whatever name it may be masked.

The characteristics of all of these colored or tinted trade paints appear to be almost identical with the iron oxide paints made and sold as such without disguise. They become hard and crack or scale off the same as the iron oxides, and after the second or third repainting even the manufacturers recommend the removal of all the old paint by burning or scraping before the application of the new coat, a proceeding that, with a thoroughly reliable and durable paint, should be wholly unnecessary. (See vol. xvi., paper No. 626, p. 399, *Transactions* A. S. M. E. United States Navy Department paint tests, 1885.)

Digitized by Google

Graphite as a pigment, both the foliated and amorphous brands, has been described in a previous paper (Montreal meeting, June, 1894, No. 598, vol. xv., *Transactions* A. S. M. E., pp. 1033–1072), but some additional information is available upon its merits.

The Detroit Graphite Manufacturing Company, the analysis of whose brand of L. S. G. amorphous graphite pigment is given in vol. xv., page 1072, present some samples of its application to boiler tubes exposed to the combined action of fire and hot water under pressure which will be of interest to the members, and to which attention is called.

The resistance of these brands of paint to the corrosive action of acids or alkalies is very remarkable, as the following severe tests will show. Pieces of iron painted with them have been dipped in muriatic, sulphuric, and oxalic acids, and then allowed to dry with the acid upon them for nineteen days, without showing a trace of any damage to the paint. The longest time which other paints withstood these conditions was twenty-four hours, and then they were rapidly and entirely destroyed. These paints have been immersed in ammonia and sal-soda for nineteen days, in coal oil for several weeks, in strong brine for *six years*, without showing injury. Pieces of iron have been coated with L. S. G. and submitted to twenty-four-hour tests in boiling alcohol, boiling beer, boiling brine, boiling sugar and water, without the paint showing any injury. Red lead paint exposed to boiling alcohol stood fifteen minutes; in boiling beer thirty minutes; in boiling brine twenty-five minutes; in boiling sugar and water fifteen minutes. L. S. G. paints immersed in cold soft-soap stood twenty-four hours without injury, while other paints stood for one hour only. All of the above tests are extremely severe conditions, and can hardly arise in practical use, except under exceptional cases.

Smokestacks painted with "superior" graphite paint have been heated to redness without blistering. Sheet tin coated with these paints can be twisted and bent in all directions without scaling or cracking the paint. Some samples of the boiler tubes coated with these paints, and mentioned in a former paper (*Transactions* A. S. M. E., vol. xv., p. 1,033), showing the power to resist the formation of scale, have now been in use for over two years and are submitted for inspection. The tube removed, from which the samples were taken, was covered with a soft deposit

Digitized by Google

of mud (not scale), and could have been washed clean by a current of water from a hose, while the adjoining tubes, not painted, were covered to a great extent with a hard, vitreous scale, over $\frac{1}{16}$ inch in thickness, that required the use of the scraper or usual pickling process to remove.

The tubes painted had been in use for over a year before being painted, and were more or less pitted and corroded. All this action has ceased, and there appears to be no reason, from the present appearance of the tubes, why they will not be in as good order at the end of five years from date as they are now.

That these paints can be furnished in colors other than the dingy or steel-gray color natural to the graphite pigment is another recommendation.

Lamp-black, when ground in either raw or kettle-boiled linseed oil, forms a most effective protective coating against corrosion of ferric surfaces, as well as decay in wooden or mineral bodies. The lettering of sign-boards is a familiar example of the merits of a simple thin coat of this paint to protect all that it covers more effectually than any other known pigment. The life of any paint can be almost foretold from the fineness to which it is ground when incorporated with the oil. Lamp-black, from its method of manufacture as a deposit from the products of imperfect combustion, is primarily in a condition to be easily prepared for a pigment. White lead makes a good paint when mixed with one-eighth of its weight of oil. Ivory-black requires its own weight in oil, and lamp-black much more. All dark-color pigments, being but slightly basic in their nature, require more oil in their preparation than light colors. It is noticed in picture and portrait paintings that the cracks in the paint are far more numerous in the dark colors (not blacks) than in the white or light colors.

INERT PIGMENTS.

The different substances known in the market as inert pigments, whose use is to a more or less extent admissible, are, viz.: barytes (heavy spar); whiting (prepared chalk); gypsum (sulphate of lime, American terra alba); kaolin (pipe-clay); ground silica; ground talc (steatite or soapstone); ground feldspar (decomposed mica, granite, gneiss, and most kinds of basalt).

Feldspar is inclined to decompose readily when exposed to the weather. Many of the clay beds now used to make fire-brick

Digitized by Google

are simply broken-down and decomposed feldspars. Its use in a pigment or in the composition of a pigment of any material which is to be durable or unchanged on exposure to the weather is to be avoided.

Talc does not grind well and is inclined to cause a paint to peel.

Kaolin grinds greasy. In many cases both talc and kaolin can be added with manifest advantage to pigments that are of a granular nature.

Silica grinds hard, but its use is less objectionable than some of the other before-named materials, and, as a pigment, to be durable must be brought to a fine state of subdivision; its use otherwise is to be avoided.

Barytes, from its great weight, is but little used, though its qualities otherwise are beneficial in a pigment.

Whiting, when used as a pigment, is liable to a chemical reaction between the oil and itself which may possibly result in the formation of a lime soap, which is not at all durable. Putty, however (which is a mixture of oil and whiting), is a very durable body, and withstands exposure to atmospheric effects and water remarkably well.

Sulphate of Lime (*gypsum*), all things considered, is possibly the best of the inert substances used as component parts of pigments. It is a hydrated material which has as a part of its composition two molecules of water. The heat caused by the friction of grinding drives off a portion of this chemically combined water, and if perchance this water is taken up again before the paint is spread, there is a tendency on the part of the paint to "*liver*," a phenomenon familiar to all painters; but the causes which contribute to this change have not been clearly defined, and there is still much mystery in the subject to be unravelled. Sulphate of lime is of great durability; it is chemically inactive as a pigment; it has a low specific gravity, and can be easily and minutely ground and incorporated with whatever pigment it is desired to mix with it and the liquid. *It does not "set"* nor settle rapidly in the paint bucket, and its use has no specially undesirable features.

Engineering News, June 6, 1895, p. 370, has a valuable contribution by Walter G. Berg, C. E. (Engineers' Office, Lehigh Valley Railroad), "Painting Iron Railway Bridges," that reviews the literature of anti-corrosive compounds to date, and

Digitized by Google

gives a list of paints, their cost per gallon, covering power, and general composition and merits as preservative compositions, that will benefit the engineering fraternity to read and place upon file.

Mr. Berg's deductions agree with those of the writer, that *the most important feature* in the application of any paint, good or bad, is to prepare the surface to receive it by removing all grease, dirt, mill-scale, rust, etc., and not to paint when the iron is wet or the weather foggy or cold, unless it can be done under cover, in well-warmed workshops.

The removal of the grease and dirt due to machinery processes cannot be too vigorously insisted upon. Samples of paint are in the writer's museum, that were applied over the surface of an iron beam covered with machine grease, that had dried perfectly, and formed a coating as tough and almost impervious to moisture as india-rubber, yet came away from the surface of the iron in skins nearly a square foot in area at the friction of hand pressure on the painted surface.

Cassiers' Magazine, June, 1895, vol. viii., No. 2, p. 109, has a valuable contribution to the anti-corrosive literature of the day, "The Care of Steel Ships," by Philip Hichborn, Chief Constructor, U. S. N. The deductions of Mr. Hichborn agree substantially with those of Prof. Vivian B. Lewes, quoted in *Transactions* A. S. M. E., Montreal meeting, June, 1895, vol. xvi., paper No. 626, pp. 390–399.

For internal corrosion in the confined spaces of the double bottom, cargo and bilge water on ballast spaces, the use of cement has been found to give the best protective results, being easily removed when scaled off by mechanical injury or by the disruptive action of rust; the wetted surface in these locations precluding the application of any paint compound without docking the ship, and drying her out by forced ventilation.

For the corrosion externally, under the water-line, the use of red lead and oxide of zinc appears to give the most uniform and satisfactory results, thus continuing the experience and data furnished by the U. S. Navy Department Paint Tests, reported at length in *Transactions* A. S. M. E., vol. xvi., paper No. 626, pp. 399–403.

If the continued tests and use of the before-mentioned L. S. G. brand of graphite paint prove as satisfactory in the future as they have in the past, under the action of hot water under pressure,

Digitized by Google

and sea-water baths of six years' duration, its use will materially increase the length of life and decrease the cost of caring for not only our merchant and naval marine, but also that of every other ferric structure or body to which it may be applied.

Protection from corrosion is a term about as varied in its definition as the number of persons, whether master painters or engineers, who use it. In general, it may be said to mean that some compound, either a paint or a coating, has been applied to a metallic object to prevent its decay from natural causes incident to its location or intended use, or both.

The progress which the mechanical arts make in the life of each generation of men in a great measure limits the life of most engineering structures, regardless of the failure of the said constructions from natural causes or accident, even if they were left as they came from the workman's hands without a coat of paint.

There are but few of the important railway bridges and viaducts of iron and steel which have been erected during the past thirty years, either as constructions for new lines of railway or to replace the wooden structures that formerly were the order of the day, which will not be pulled down (if they do not fall down, as in too many instances is the case) ere they are forty years of age, a change rendered necessary by the use of heavier engines and trains at higher speeds, to say nothing of the better constructive methods and materials in them; and he will be rash, indeed, who will declare that the next fifty years will not see as many radical changes in these structures as have taken place in the past.

The thousands of iron and steel vessels which compose the world's merchant and naval marine have been reconstructed in design every ten years since the keel of the first iron vessel was laid, and whether as the ocean greyhound which with peaceful intent races against time on her ocean trips, or the formidable battleship or armored cruiser, after but a few years of active life they all join the endless procession toward the marine junk-shop of obsolete patterns; while corrosion, speeded on its way by the combined action due to sea-air, sulphur, and bilge water, high temperatures, marine growths, and the inaccessible portions of many parts of the ship, holds high carnival, and, as it were, laughs at the puny efforts of man to check its career by dabs with a paint brush.

Digitized by Google

Well indeed may the engineer inquire, "How shall we protect the ship?" and, from the complex nature of the question and the unsatisfactory nature of many past experiments, cease to wonder at the practice of some engineers, civil as well as marine, in coating the structure or vessel with almost anything in the way of paint, regardless of quality, composition, or merit, so that it covers the stains, pleases the eye, costs little, dries quickly, and makes a shadowed semblance of protection. Why spend much money or worry over a thing which is on the way to retirement as a back number almost before it leaves the builder's hands, and whose life will, no doubt, not exceed my own?

If it is a ship or other marine construction, furnish something which will permit it to be painted one day, got out of the dock-yard the next day, and which will keep the marine growth and fouling down, and the expense of docking, scraping, and painting it again next year will be gladly borne.

If it is a railway superstructure, it must be painted and dry ere the workmen's hammers have ceased to ring upon it. If it is a railway freight car, why, there are built, repaired, and repainted, at many railway shops, one hundred and fifty cars per day, each one requiring some thirty-five feet of space upon the paint-shop track; and if these cars are to receive two coats of paint, and be required to wait from three to four days for each of them to dry, it means some eight to ten miles of paint-shop, shed, or side-track room, and railway companies will make no such provisions, even if at the end of ten years it would prove not only better but cheaper than the customary rush methods or practice of one day for each coat of paint, including spreading and drying, regardless of any atmospheric conditions which have so much influence over the latter.

Prominent master painters have remarked, when some specially prepared and well-tested brand of paint has been called to their attention for its protective or lasting qualities: "We do not believe in any paint that lasts fifteen years or more; *it is not good for the trade*, and if the use of such paint bids fair to become general, we want to get out of the paint business."

There are many special paints in the market, some of them of great merit for the particular purpose for which they are compounded; but not being generally anti-corrosive, they cannot be detailed without requiring too much space in this paper, and their record is only of interest as showing the efforts made to

Digitized by Google

prevent corrosion. Samples of some of these special coatings are presented for examination at this meeting.

The liquid medium which enters into the composition of all paints, anti-corrosive or otherwise, is of importance enough to warrant the preparation of a paper upon that subject alone. Its consideration is, therefore, postponed to the fourth and closing paper of the series of articles on rustless coatings.

Digitized by Google

DCXXXVIII.*

ANALYSIS OF THE TREMONT TURBINE.

BY DE VOLSON WOOD, HOBOKEN, N. J.
(Member of the Society.)

THE Tremont turbine furnishes a coveted example for testing the theoretical formulas for the proportions and deliverance of turbines. It was made by J. B. Francis, engineer, after the general pattern of the celebrated U. A. Boyden, Esq., turbines, which yielded, from careful experiments, an admitted efficiency of 88 per cent. The dimensions of a Tremont turbine, and the careful and somewhat exhaustive efficiency tests are fully set forth by Francis, in his work entitled *Lowell Hydraulic Experiments*. For well-known reasons these did not give as high efficiency as the Boyden wheels, constructed for Appleton & Co.; but the series of tests has been standard on this subject to the present day.

The workmanship on these wheels was of high grade. The crowns, which were of cast iron, were accurately turned in a lathe, and the partitions (or walls) of the buckets were of Russia sheet-iron plates, $\frac{5}{64}$ of an inch thick. These plates fitted into grooves carefully cut in the crowns, on which were tongues projecting through mortises in the crowns, and the former headed down, thus securing the crowns to each other without bolts or rods, and forming smooth, unobstructed passages for the flow of water. In the Boyden wheel a "diffuser" was added, which consisted of two crown-like pieces outside the wheel, but not rotating with it, the space between which was diverging, producing a diminution of velocity of the escaping water, causing more of its energy to be imparted to the wheel. This device, it is said, added some 2 or 3 per cent. to the efficiency of the wheel. The Tremont turbine was not provided with this device.

We have selected for analysis the experiment by Francis

* Presented at the Detroit meeting (June, 1895) of the American Society of Mechanical Engineers, and forming part of Volume XVI. of the *Transactions*.

Digitized by Google

which yielded the highest efficiency; for our turbine formulas are applicable only when the wheel is so proportioned and run as to give a maximum efficiency.

At the meeting of this Society, held in New York city, December, 1892, the writer presented a paper on "Hydraulic Reaction

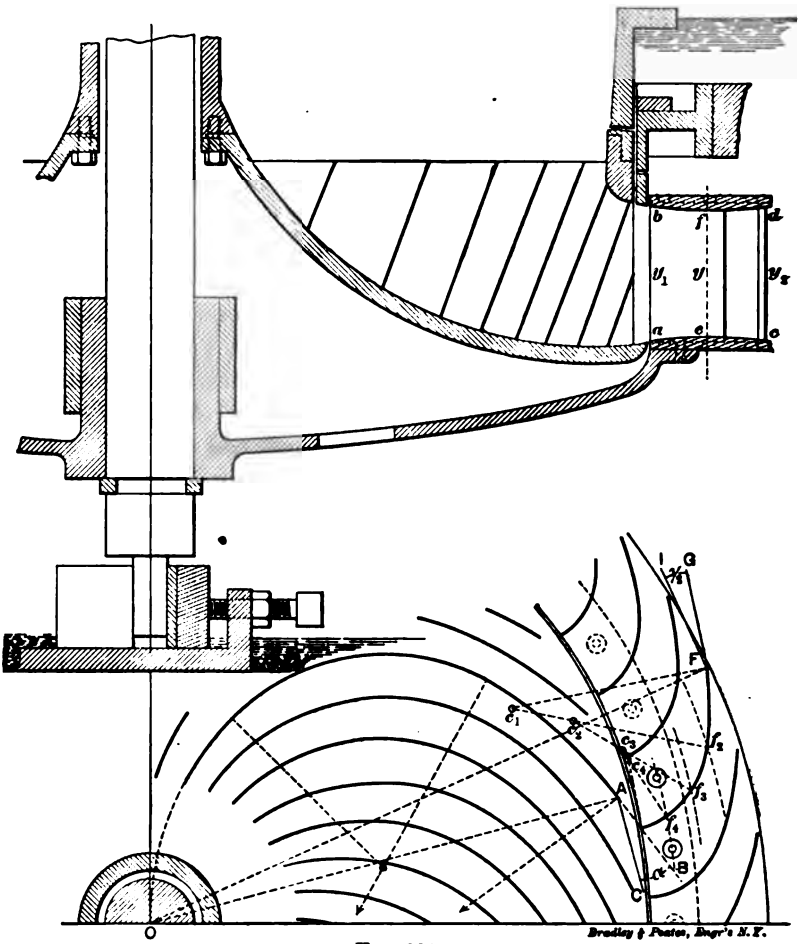

FIG. 201.

Motors," which is published in the *Transactions* of this Society, vol. xii., pp. 266–309; and the notation and formulas here used are, for convenience, brought forward.

[$r_1 = OA$, the initial radius, $r_2 = OF$, the outer radius, Fig. 201;

Digitized by Google

$y_1 = ab$, the initial depth between the crowns, $y_2 = cd$, the outer depth;

$\alpha = CAB$, the angle between the terminal element of the guide and the initial circumference of the wheel;

γ_1 = the angle between the initial element of the bucket and the initial rim;

$\gamma_2 = GFI$, terminal angle of bucket;

h_1 = fall from upper level to wheel;

h_2 = depth of wheel below surface in wheel pit;

$H = h_1 - h_2$ = effectual fall;

ω = angular velocity of wheel;

Q = cubic feet of water discharged per second;

U = work done by the water on the wheel in foot-pounds;

$H.P.$ = the horse power imparted by the water to the wheel;

E = the efficiency of the water at the wheel;

$V = AB$, the velocity quitting the guide = velocity of passing the gate;

v_1 = initial velocity in the buckets;

$v_2 = FG$, the terminal velocity in the buckets;

$V_2 = GI$, the quitting velocity in reference to the earth;

θ = the direction of the water quitting the wheel measured from the rear arc;

δ = 62.2, the weight in pounds of a cubic foot of water;

μ_1 = 0.10, the coefficient of friction in the guides;

μ_2 = the coefficient of friction of the water in the buckets.

$$\left.\begin{aligned} -M^2 &= \sqrt{1+\mu_2}\left[\frac{\cos\alpha\sin\gamma_1}{\sin(\alpha+\gamma_1)}\left(\frac{r_1}{r_2}\right)^2 - 1\right] \\ N^2 &= 1 - \left(\frac{2\cos\alpha\sin\gamma_1}{\sin(\alpha+\gamma_1)} + \mu_1\frac{\sin^2\gamma_1}{\sin^2(\alpha+\gamma_1)}\right)\left(\frac{r_1}{r_2}\right)^2 \end{aligned}\right\} \quad (15a)$$

$$(For\ max.) \qquad \omega^2 = \frac{gH}{r_2^2}\cdot\frac{M^2 - \sqrt{M^4 - N^2\cos^2\gamma_2}}{N^2\sqrt{M^4 - N^2\cos^2\gamma_2}} \qquad (16)$$

$$E_{max.} = \frac{1}{N^2\sqrt{1+\mu_2}}\left[M^2 - \sqrt{M^4 - N^2\cos^2\gamma_2}\right] \qquad (16a)$$

$$V = \frac{\sin\gamma_1}{\sin(\alpha+\gamma_1)}\omega r_1 \quad . \quad . \quad . \quad . \quad . \quad . \quad (17)$$

Digitized by Google

$$v_1 = \frac{\sin \alpha}{\sin (\alpha + \gamma_1)} \omega r_1 \quad . \quad . \quad . \quad . \quad . \quad (18)$$

$$v_2 = \frac{\sqrt{gH}}{\sqrt{1 + \mu_2}} \sqrt{1 + \frac{M^2}{\sqrt{M^4 - N^2 \cos^2 \gamma_2}}} \quad (19)]$$

$$V_2 = v_2^2 + \omega^2 r_2^2 - 2 v_2 r_2 \omega \cos \gamma_2 \quad . \quad . \quad (90)]$$

The coefficients μ_1 and μ_2 are uncertain quantities. Weisbach considers $\mu_1 = 0.10$, and μ_2 from .05 to 0.10. We will assume $\mu_1 = 0.10$, and for the assumed Boyden wheel $\mu_2 = 0.05$. Our analysis will show that $\mu_2 = 0.15$ nearly, for the Francis wheel.

For the wheel we now analyze we have (see *Lowell Hyd. Exp.*),

$r_1 = 3.38$ feet; $v_2 = 4.20$ feet (p. 14).
$\alpha = 21°$, $\gamma_2 = 13°$, $\gamma_1 = 90°$ } as measured from Plate III. of *Exp.**
$Q = 138.2$ cubic feet (p. 33).
$H = 12.9$ feet (p. 33).
$h_1 = 15.11$ feet (p. 33).
$h_2 = 2.2$ feet (p. 33).
$U = 111{,}218.1$ total power of the water in foot-pounds per second.
$E = 0\ 79375$ (p. 33).
$H.P. = 161$, about, as measured by the brake.
$n = 0\ 85106$, number of revolutions per second.
$y_1 = 0.9368$ feet, depth between the inner edges of the crowns.
$y_2 = 0.9314$ feet, depth between the outer edges of the crowns.
$N = 44$, number of buckets.
$g = 32.16$.

With this data we solve as follows:

* Rodmer gives for these angles $\alpha = 28°$, $\gamma_2 = 22°$, $\gamma_1 = 90°$, but these values of α and γ_2 are not so found from Francis's plates, and are not consistent with other data.

Digitized by Google

TABLE I.

	$a = 21°$ $\gamma_2 = 18°$ $\mu_2 = 0.20$	$a = 21°$ $\gamma_2 = 18°$ $\mu_2 = 0.10$	$a = 21°$ $\gamma_2 = 18°$ $\mu_2 = 0.05$	Measured Values.
ω	5.369	5.476	5.514	.....
Rev. per second	0.855	0.873	0.879	0.851
K_{max} per cent.	79.308	84.84	87.76	79.375
v_1 feet	6.968	7.102	7.157	.....
v_2 feet	23.115	23.989	24.525	.....
$\frac{v_2}{v_1} = \frac{k_1}{k_2} =$	3.316	3.37	3.426	....
y_1 feet	0.957	0.939	0.932	0.9368
y_2 feet	1.103	1.063	1.039	0.9314

It will be observed that for $\mu_2 = 0.05$ the efficiency is over 87 per cent., and if a diffuser would add 2 per cent., we would have an efficiency exceeding that admitted for the Boyden wheel. But it seems improbable that the prejudicial resistance can be so low; and it is well to observe that for $\gamma_1 = 21$ degrees, $\mu_1 = 0.10 = \mu_2$, and $\gamma_2 = 10$ degrees, a theoretical efficiency nearer 90 per cent. will be found.

It will be seen that for $\mu_2 = 0.20$, some of the numbers given in the first column of the preceding table give results agreeing well with actual values. Thus, the revolutions are:

Computed	51.3 per minute.
Measured	51.1 per minute.
Also the efficiency is:	
Computed	79.308 per cent.
From measurements	79.375 per cent.
The initial depth between the crowns is:	
Computed	0.957 feet.
Measured	0.9368 feet.
Difference	0.202 feet.
The outer depth between the crowns is:	
Computed	1.103 feet.
Measured	.9314 feet.
Difference	.1716 feet,
or	2.059 inches.

Not only do the computed depths differ from the measured ones, but our computed depth is less for the inner rim than for

Digitized by Google

the outer, while the measured values are the reverse. This cannot be dismissed with the remark that the wheel was improperly proportioned; for the 138.2 cubic feet per second passed the weir; therefore this requires further investigation.

The depths between the crowns were determined as follows: dropping the subscripts in the notation and placing ρ for r_1 or r_2, we have

$$y\,(2\pi\rho - Nt \div \sin\gamma)\,v \sin\gamma = Q \quad . \quad . \quad (20)$$

in which $2\pi\rho$ = whole circumference at ρ from centre.

Nt = thickness of N bucket plates.

$Nt \div \sin\gamma$ = ring thickness.

$y\,(2\pi\rho - Nt \div \sin\gamma)$ = free ring section for passage of water.

$v \sin\gamma$ = radial component of the velocity in the bucket, and the product gives the quantity of flow in feet per second, or Q. Hence, for initial and terminable values, we have

$$\frac{y_2}{y_1} = \frac{v_1\,(2\pi r_1 \sin\gamma_1 - Nt)}{v_2\,(2\pi r_2 \sin\gamma_2 - Nt)} = \frac{v_1\left(2\pi \times 3.38 - \dfrac{44 \times 9}{12 \times 64}\right)}{v_2\left(2\pi r_2 \sin\gamma_2 - \dfrac{44 \times 9}{12 \times 64}\right)} \quad (21)$$

If the thickness of the bucket plates be neglected, we have simply (γ_1 being 90 degrees),

$$\frac{y_2}{y_1} = \frac{r_1}{r_2} \cdot \frac{v_1}{v_2 \sin\gamma_2},$$

which for 13 degrees gives

$$\frac{3.38}{4.20} \cdot \frac{6.968}{23.115 \times 0.245} = 1 \text{ very nearly,}$$

or the depths would be equal; and that the outer depth shall be less than the inner, γ_2 must exceed 13 degrees. With $\gamma_2 = 14$ degrees, $\alpha = 20$ degrees. and $\mu_2 = 0.20$, we found that the depths should be about equal; then we tried 15 degrees with the following results, by the side of which we have entered the results of some other computations, as follows:

Digitized by Google

TABLE II.

	$Q = 138.2$ $a = 21°$ $\gamma_2 = 15°$ $\mu_2 = 0.20$	$Q = 135.5$ $a = 21°$ $\gamma_2 = 15°$ $\mu_2 = 0.15$	$Q = 138.2$ $a = 23°$ $\gamma_2 = 14°$ $\mu_2 = 0.20$	$Q = 138.2$ $a = 23°$ $\gamma_2 = 15°$ $\mu_2 = 0.20$	Measured.
ω	5.359	5.407	5.364	5.346	.....
Rev. per second	0.853	0.867	0.854	0.851	.851
$E_{max.}$ per cent	78.33	80.9	78.90	78.10	79.375
v_1 feet	6.954	7.017	7.696	7.67	.....
v_2 feet	23.048	23.573	23.15	23.19	.....
y_1 feet	0.9439	0.9317	0.862	0.870	.9368
y_2 feet	0.9346	0.9104	1.00	0.945	.9314

In the first column, as measured, the revolutions are practically the same, the efficiency 1 per cent. less, and the *relative* depths of the buckets practically as measured, and the difference between the mean of the given and calculated depths is less than $\frac{1}{8}$ of an inch. It is not expected that theoretical results will be identical with measured ones—the conditions of the former are assumed to be perfect, while the latter involve errors of observation and varying conditions. But a further correction in the computed depths must be made. Since the gate does not fit water-tight, a part of the 138.2 cubic feet which passed over the weir may have escaped at the gate, and hence the entire quantity may not have done work on the wheel. If there be $\frac{1}{8}$ of an inch clearance at the gate (this assumption is gratuitous, but will serve for illustration) there will be an annular opening of $2 \times 3\frac{1}{7} \times 3.38 \times \frac{1}{8} \times \frac{1}{12} = 0.222$ square feet. It will be found hereafter that the internal pressure at the gate is 2,648 pounds per square foot, and the atmosphere and 2.2 feet head in the tail race give an outside pressure of 2,254 pounds, leaving 394 pounds inside effective pressure at that point, which would produce

$$a\ velocity = \sqrt{2g \times \frac{394}{62.2}} = 20 \text{ feet, nearly;}$$

hence the volume of water which would escape under these conditions would be $0.62 \times 0.222 \times 20 = 2.75$ cubic feet nearly, allowing 0.62 for the coefficient of discharge. This would leave

Digitized by Google

135.5 cubic feet of water to do work on the wheel. This would give

$y_1 = 0.9254$ feet.
Measured, 0.9368 feet.
Difference, .0114 feet = $\frac{1}{7}$ of an inch, nearly.

And

$y_2 = 0.9163$ feet.
Measured, 0.9314 feet.
Difference, .0151 feet = $\frac{2}{11}$ of an inch, nearly.

so that the computed values are almost identical with the measured ones.

These results are satisfactory except that for the efficiency. The computed value ought to exceed the value determined by the brake. So I have computed again, making

$$Q = 135.5,\ \alpha = 21°,\ \gamma_2 = 15°,\ \mu_1 = 0.10,\ \mu_2 = 0.15,$$

the results for which are in the second column of Table II. The dynamic efficiency is 80.9 per cent., which call 81 as the nearest entire number. If 2 per cent. be the frictional resistance of the shaft, we have 79 per cent. for the computed brake efficiency. This is almost identical with the observed value, and the greatest difference between the real and computed depth, y_2, is only $\frac{1}{7}$ of an inch, and this difference can be made less by assuming γ_2 a little less than 15°. We conclude, therefore, that for this wheel $\mu_1 = 0.10$, $\mu_2 = 0.15$, and the mean angle of discharge, γ_2, $= 14\frac{3}{4}°$, or values very near these. The value 15°, or $14\frac{3}{4}°$, for γ_2, may not be the terminal angle of the bucket, but it will be the mean angle of discharge of a finite stream.

In this wheel the inside of both the crowns is convex inward, as shown in the figure, the curvature being such as to reduce the depth between the crowns $\frac{3}{4}$ of an inch at $5\frac{1}{2}$ inches from the inner rim. This reduction is about $\frac{1}{16}$ of the initial depth. No reason is assigned for this form. If the object of this curvature was to conform to the form of the "vena contracta" it appears to be too small. In any case, its effect will be to increase the velocity and hence reduce the pressure in the wheel at that point; but if the internal pressure exceeds the external pressure (the external being that of an atmosphere 2,116 pounds per

Digitized by Google

foot, and the weight of 2.2 head of water in the wheel pit about 138 pounds, or a total of 2,254 pounds) it seems to be unnecessary. The internal pressure was computed from the formula:

$$p = p_a + \delta h_1 + \left[\tfrac{1}{2}\omega^2(\rho^2 - r_1^2) - (1+\mu_1)\sin^2\gamma_1 + \left[\frac{k_1^2}{k^2}(1+\mu_2) - 1\right]\sin^2\alpha\right] \frac{\frac{\delta}{g}\omega^2 r_1^2}{\sin^2(\alpha+\gamma_1)} \quad \ldots\ldots\ldots (22)$$

with the following results for mid-section:

TABLE III.

If	then	Pressure lbs. per Square Foot.	Pressure lbs. per Square Inch.
$y = y_1$	$\frac{k_1}{k} = 1.205$	2,637	18.31
$y = 0.9\,y_1$	$\frac{k_1}{k} = 1.389$	2,630	18.20
$y = 0.8\,y_1$	$\frac{k_1}{k} = 1.510$	2,610	18.12
$y = 0.7\,y_1$	$\frac{k_1}{k} = 1.720$	2,581	17.99
$y = 0.6\,y_1$	$\frac{k_1}{k} = 2.01$	2,540	17.90
$y = 0.5\,y_1$	$\frac{k_1}{k} = 2.41$	2,380	16.52

But it is more important, in this case, to find the pressure at other points in the wheel. We have found the pressure, p_1, at the entrance into the bucket, $\rho = r_1$, and at $\frac{1}{4}$ the width of the crown from the inner rim, at $\frac{1}{2}$, $\frac{3}{4}$, and $\frac{7}{8}$, giving pounds per square foot as follows:

p_1	$p_{\frac{1}{4}}$	$p_{\frac{1}{2}}$	$p_{\frac{3}{4}}$	$p_{\frac{7}{8}}$	p_2
2,648	2,670	2,667	2,610	2,420	2,254

$$\frac{k_1}{k} = 0.986,\quad \frac{k_1}{k} = 1.20,\quad \frac{k_1}{k} = 1.67,\quad \frac{k_1}{k} = 2.2,\quad \frac{k_1}{k} = 3.3.$$

The pressure p_1 is at the gate, where the velocity is

$$V = 6.95 \div \sin 21^\circ = 20.83 \text{ feet.}$$

At $\frac{1}{4}$ the width of the crown the velocity will be

$$v = 6.95 \times 0.986 = 6.53 \text{ feet,}$$

Digitized by Google

and the pressure is greater. Since the terminal velocity is about 3.3 times the initial, the velocity ought to increase continually from the entrance into the bucket, to avoid eddies, and therefore the normal sections should continually decrease, which, as is seen, may not be the case with flat crowns and partitions of uniform thickness. Thus, near the foot of the preceding page, it will be seen that $\frac{k_1}{k} = 0.986$, showing that the normal section at $\frac{1}{4}$ the width of crown exceeds the initial section. To make the sections diminish continually, the depths of the buckets may at first diminish and later increase by curving the crowns,

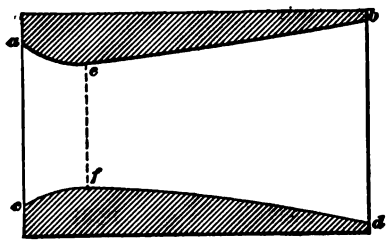

FIG. 202.

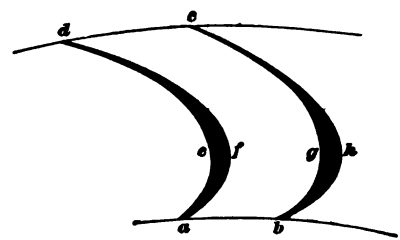

FIG. 203.

as in Fig. 202, the least depth being near the inner rim, as the desired diminution of the normal sections beyond that point will be secured by the curvature of the buckets. If the wheel be cast the diminution of section may be secured by increasing the thickness of the walls, as in Fig. 203, the crowns being plane. If the terminal angle be less than 13 degrees the outer depth (in this wheel) would be greater and the crowns should flare outwards, as in Fig. 204. The radial flow for the inflow wheel is not only less than for the outflow for similar conditions, but the quitting rim is also much less in proportion, and hence, when proportioned according to this system, the flare of the buckets will be much greater, as shown in Fig. 205.

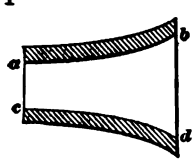

FIG. 204.

The direction of the water as it leaves the outer rim is given by the equation

$$\cot \theta = \cot \gamma_2 - \frac{\omega r_2}{v_2 \sin \gamma_2},$$

where θ is the angle measured from the rear arc. This gives, in this case,

$$\theta = 91^\circ 33',$$

Digitized by Google

or the water will be thrown *forward* of the radius prolonged 1 degree 33 minutes; hence the direction should be nearly radial. Francis found, by a movable vane, about 34 degrees; but it is

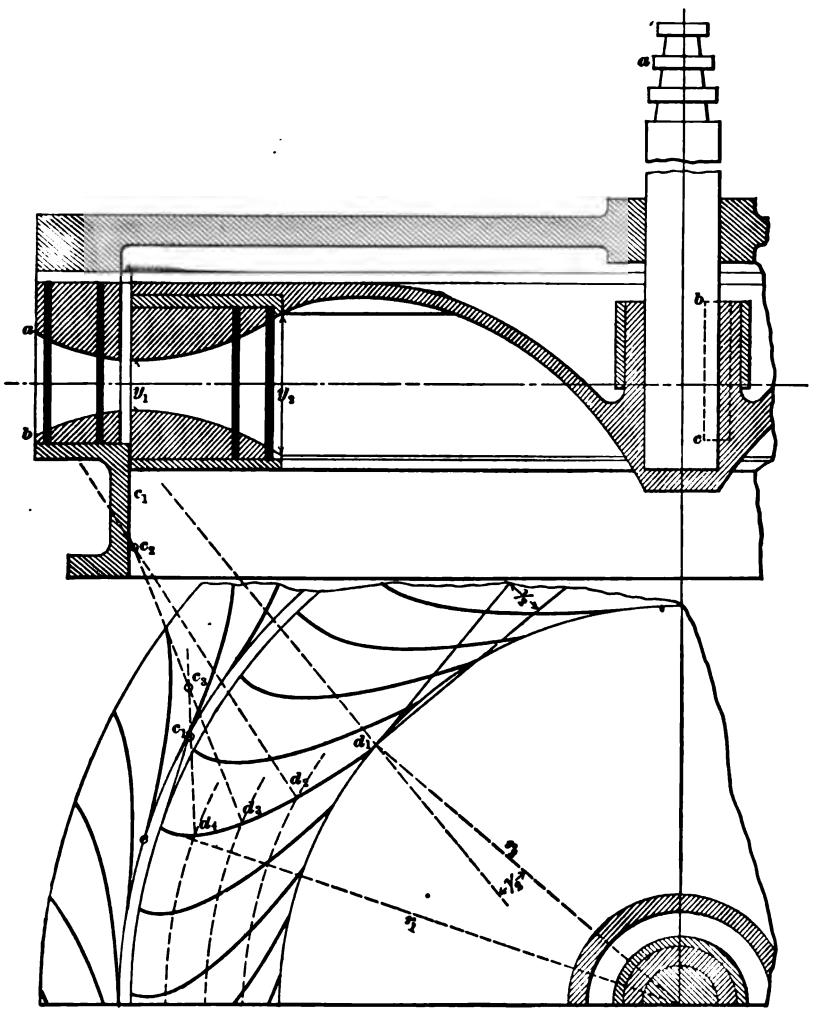

FIG. 205.

difficult to account for so large an angle, and one is inclined to think that there was a defect in the measurement. It is asserted by some writers that the quitting direction should be radial for best effect, but theory and experiment unite in showing that the assumption is not true, except in special cases.

Digitized by Google

The radial component of the velocity at quitting will be

$$v_2 \sin \gamma_2 = 5.990,$$

or, say, 6 feet per second. The velocity of the quitting water will be w in the equation

$$w \sin \theta = v_2 \sin \gamma_2;$$

$$\therefore w = 5.99,$$

or, say, 6 feet, which is nearly the same as the radial component, as it ought to be, since the direction is nearly radial.

The initial velocity

$$v_1 = 6.9,$$

or, say, 7 feet, is radial in this case, so that the radial component of the velocity diminishes from about 7 feet to about 6 feet. For intermediate points it will depend upon the ring sections.

To find the diameter of the shaft.—The shaft will be subjected to a twisting stress. Let P be a twisting force, and a its arm in feet; n, the number of revolutions of the wheel per minute; *H.P.* the number of horse-powers delivered; then

$$\frac{P.\, 2\pi an}{33{,}000} = H.P.$$

$$\therefore 12\, Pa = \frac{63{,}000\ H.P.}{n} = J\pi \frac{d^3}{16}$$

where d is in inches, J the modulus of rupture to torsion $= \frac{1}{15}$ of 50,000, say.

$$\therefore d = \sqrt[3]{100\ \frac{H.P.}{n}} \text{ nearly.}$$

If $H.P. = 161$, $n = 52$, then $d = 6\frac{3}{4}$ inches, nearly.

In the Tremont wheel, the diameter of the shaft was 7 inches from the wheel to the upper bearing, and larger in the hub.

To find the path of the water in reference to the earth.—Divide the space between the outer and inner rims into any number of parts, by concentric circles. Suppose there are 8 equal parts,

$r_2 = 4.2$
$r_1 = 3.38$
$8)\overline{0.82}$
$\overline{0.1025}$ feet between consecutive rings.

Digitized by Google

Let ρ_1, ρ_2, etc., be the radii of the successive annuli, then

$$\rho_2 - \rho_1 = \rho_1 - r_1 = 0.1025 \text{ feet.}$$

The initial velocity being radial and $v_1 = 7$, nearly, the time required to go from the inner circle to the next will be

$$T_1 = \frac{\rho_1 - r_1}{v_1} = \frac{.1025}{7} = 0.0146 \text{ seconds;}$$

but in this time the point a_1 of the bucket will have gone forward a distance

$$a_1 d_1 = \rho_1 \omega T_1 = 0.27 \text{ feet.}$$

The radial velocity at the second arc will be

$$v_{r1} = \frac{2\pi r_1 - Nt \div \sin \gamma_1}{2\pi \rho_1 - Nt \div \sin \gamma} \cdot \frac{y_1}{y} v_1 = \frac{r_1 y_1 v_1}{\rho_1 y} \text{ nearly;}$$

then

$$T_2 = \frac{\rho_2 - \rho_1}{v_{r1}}, \text{ and } a_2 d_2 = \rho_2 \omega (T_1 + T_2),$$

and so on through the wheel.

(I am indebted to Mr. F. D. Furman, assistant in Stevens Institute, for the computations in this paper.)

DISCUSSION.

Mr. A. F. Nagle.—I am not able to follow Professor Wood through all the calculations involved in this analysis, but the close agreement between the computed and actual results prompts me to ask whether the designers of the wheel arrived at their proportions by the aid of such mathematical formulas, or whether their work was quite empirical?

In other words, was the theory made to fit the facts, or were the facts evolved from the theory?

*Prof. De Volson Wood.**—In response to Mr. Nagle's question, I would say that Mr. Francis, in his *Lowell Hydraulic Experiments*, states that he copied from Boyden's wheels, that Boyden gave him very little theory. The writer learned, years ago, from private sources, that Mr. Boyden worked much on the theory, but

* Author's closure, under the Rules.

Digitized by Google

did not publish anything, so far as known. Boyden and Francis observed certain principles which are fundamental in the theory for securing good efficiency, such as making the terminal angle of the buckets (γ_2) as small as practicable; also, a small terminal angle of the guides (α); also, that for simplicity the initial angle of the buckets better be 90 degrees. The particular curvature of the crowns here found indicates that theory was not applied to it, and I have yet to learn what reason was assigned for curving them at all.

Certain things cannot be evolved from theory; as, for instance, the particular values of the terminal angles of the guides and buckets, and the number of buckets. These are assumed in accordance with general principles. The same process is observed in designing other motors.

In this case there is furnished, as a motor, a wheel well and accurately made, which has been subjected to a careful test, and all the quantities involved have been accurately measured; and the question is: Will theory evolve the facts not assumed? and what must be done to make the theory fit the facts? Every theoretical formula applied to the solution of engineering problems contains one or more constants which may be called "the constants of circumstances." These constants will be different for the same class of machines under different conditions. In the Tremont wheel these constants, representing prejudicial resistances, ought to be comparatively small, while for a roughly made cast wheel they would be much larger. The greater part of my paper consisted in finding these "constants" for this wheel, and the modifications due to streams of finite size, and it might with propriety have been entitled "the determination of the constants in the theory of the Boyden wheel, and the modifications of theory when applied to finite streams." It is not known that the stream filled the buckets throughout, but the conditions have been sought which would cause them to be so filled, and at the same time give the observed speed and efficiency. The shaft friction is not known, but Mr. Lehmann, from an analysis of experiments on 36 turbines varying from 1 to 500 horse-power, concluded that the mean value is about 2 per cent. Messimer gives from 2 to $3\frac{1}{2}$ per cent. If it be 2 per cent., the hydraulic efficiency in this case would be 81.375 per cent. Comparing this with the second column of Table II. shows that the prejudicial resistance, μ_1, is less than 0.15 if $\mu_1 = 0.10$. The analysis also shows that the

Digitized by Google

mean angle of discharge, γ_2, exceeds the vane angle, but no law is determined for its value. In this case the following values give the required quantities more accurately than those in Table II.:

$\mu_1 = 0.10$	$\mu_2 = 0.13$
$\gamma_2 = 15°$	$\alpha = 21°$
$Q = 136$ cu. ft.	$r_2 = 4.0$ ft.

But the computed results are already so close to the actual as to make it unnecessary to repeat the computation.

Theory, when applied to wheels of high grade, is very strongly confirmed, if not absolutely established, by this investigation.

Since the publication of this paper I have learned that the Tremont turbine, after having run continuously from about 1849 to 1892, or for about forty-three years, was removed in the latter year to make place for one of larger power. Also that four other turbines of the same size, in the same vicinity, are being removed (1895), to be replaced by larger ones.

Mr. Samuel Webber, a friend of Mr. Boyden, informs the public, through the columns of the *American Machinist* of July 25, 1895, that Mr. Boyden spent months, if not years, in working out the theory of the turbine, before the first one was constructed; and that he was virtually the parent of many of the high-grade turbines of the present day. I append also a table of the results of experiment, in order to bring them before the members in close connection with the theory.

Digitized by Google

RESULTS OF EXPERIMENTS

1 Number of the experiment.	4 Height of the regulating gate, in inches.	8 Number of revolutions of the wheel per second. $\frac{n}{60}$	10 Useful effect, or the friction of the brake in pounds avoirdupois raised one foot per second. U	13 Total fall acting upon the wheel, in feet. H	14 Depth of water on the weir, in feet. h_1	Quantity of water which
4	11.49	1.59651	88348.3	12.554	2.0983	156
6	"	1.46149	51680.6	12.658	1.9989	152
8	"	1.30938	66845.5	12.720	1.9536	147
10	"	1.18460	77154.6	12.800	1.9315	144
14	"	1.06744	83969.8	12.856	1.9098	142
16	"	0.99945	86314.4	12.890	1.9048	141
18	"	0.94507	87392.7	12.880	1.8908	140
20	"	0.91116	87819.8	12.886	1.8866	140
22	"	0.89713	88076.2	12.898	1.8834	139
25	"	0.88496	88189.9	12.899	1.8775	139
30	"	0.85106	88278.9	12.903	1.8697	138
31	11.48	1.78971	0.	12.539	2.0891	162
32	"	0.88624	88320.8	12.915	1.8704	138
34	"	0.78401	87947.8	12.941	1.8687	138
35	"	0.74211	87066.5	12.939	1.8652	137
37	"	0.64568	83965.5	12.940	1.8412	135
40	"	0.60000	82109.8	12.973	1.8380	134
41	"	0.58283	78492.2	12.977	1.8282	133
45	"	1.78333	0.	12.471	2.0864	132
46	"	0.83207	88603.9	12.954	1.8737	138
48	"	0.80821	88240.1	12.948	1.8728	138
50	"	0.76893	87865.8	12.952	1.8694	138
51	8.55	1.48331	39452.4	12.758	1.9173	148
53	"	1.14177	74827.2	12.909	1.8656	137
55	"	1.02459	80215.4	12.950	1.8586	137
57	"	0.93071	81911.6	12.965	1.8408	135
59	"	0.86538	82195.5	12.999	1.8240	133
61	"	0.80429	81786.2	13.026	1.8117	131
63	"	0.70779	79738.1	13.028	1.8013	130
65	5.65	1.54799	0.	13.170	1.7160	121
66	"	1.35135	20054.7	13.077	1.6829	118
68	"	1.08460	53142.4	13.176	1.6409	114
70	"	0.92348	58727.1	13.253	1.6139	111
72	"	0.77482	58776.2	13.311	1.5798	108
74	"	0.68627	56253.1	13.326	1.5541	105
76	"	0.45662	46056.1	13.412	1.5034	100
77	9.96	0.85470	86207.6	12.883	1.8620	137
79	"	0.78918	86164.4	12.912	1.8544	136
80	2.875	1.24902	0.	13.347	1.2914	80
82	"	0.96022	21256.6	13.395	1.2492	76
84	"	0.67189	27985.1	13.478	1.1960	71
86	"	0.46243	24462.9	13.556	1.1407	67
90	1.00	0.61958	4998.8	13.985	0.7798	38
91	"	0.68886	3427.7	14.001	0.7846	38
92	"	0.38760	7815.6	14.020	0.7658	37

Digitized by Google

THE TREMONT TURBINE.

16	17	18	19	20	23	
Total power of the water, in pounds avoirdupois raised one foot per second.	Ratio of the useful effect to the power expended.	Velocity due to the fall acting on the wheel, in feet per second.	Velocity of the interior circumference of the wheel, in feet per second.	Ratio of the velocity of the interior circumference of the wheel to the velocity due to the fall acting on the wheel.	Direction of the water leaving the wheel, as indicated by the vane.	
u	E	V^1	$r_1\omega$		*deg.*	*m.*
122663.3	0.27187	28.4169	33.8553	1.19138		
120174.8	0.43005	28.5287	30.9921	1.08635		
116864.8	0.57199	28.6041	27.7653	0.97067	18	3
115667.0	0.66704	28.6939	25.1203	0.87546	22	56
114284.2	0.73475	28.7566	22.6359	0.78716	29	49
114150.8	0.75614	28.7946	21.1940	0.73604	35	37
112848.8	0.77442	28.7835	20.0409	0.69626	41	26
112532.3	0.78040	28.7902	19.3219	0.67113	46	18
112364.5	0.78384	28.8036	19.0243	0.66048	48	26
111859.4	0.78840	28.8047	18.7662	0.65150	50	37
111218.1	0.79375	28.8092	18.0474	0.62645	58	10
126960.2	0.	28.3999	37.9521	1.33635		
111384.0	0.79294	28.8225	17.7330	0.61525	61	54
111463.0	0.78903	28.8515	16.6254	0.57624	86	12
111139.7	0.78340	28.8498	15.7371	0.54549	99	25
109077.1	0.76978	28.8504	13.6922	0.47459	131	18
109077.0	0.75277	28.8872	12.7235	0.44045	139	45
108265.8	0.72499	28.8916	11.2882	0.39071	147	25
126084.8	0.	28.3228	37.8168	1.33521		
112009.3	0.79104	28.8660	17.6447	0.61126	60	52
111832.0	0.78904	28.8593	17.0827	0.59020	66	27
111613.5	0.78723	28.8638	16.3058	0.56492	89	44
111060.7	0.34589	28.6468	31.4548	1.09802	12	0
110917.6	0.67462	28.8159	24.2121	0.84023	22	19
110664.7	0.72485	28.8616	21.7272	0.75281	28	56
109252.2	0.74975	28.8783	19.7865	0.68344	37	47
108082.5	0.76049	28.9161	18.3511	0.63463	47	30
107246.3	0.76260	28.9461	17.0556	0.58022	59	39
106366.6	0.75012	28.9484	15.0091	0.51848	94	4
100194.6	0.	29.1057	32.8262	0.87363		
96699.5	0.30046	29.0028	28.6564	0.85216	6	30
93904.9	0.56592	29.1123	22.9997	0.81823	12	32
92188.4	0.63703	29.1973	19.5831	0.79628	21	17
89707.1	0.65520	29.2641	16.4306	0.76979	39	2
87720.9	0.64127	29.2776	14.5530	0.49707	69	27
84110.0	0.54757	29.3719	9.6830	0.32966	144	56
110380.8	0.78100	28.7868	18.1246	0.62961	55	52
109978.0	0.78350	28.8192	16.7351	0.58069	74	28
66979.0	0.	29.3006	26.4865	0.90396	0	30
64018.1	0.33204	29.3533	20.3622	0.69369	4	32
60424.6	0.46314	29.4441	14.2480	0.48390	20	9
57342.0	0.42661	29.5292	9.8061	0.33208	81	40
33340.8	0.14993	29.9028	13.1386	0.43806		
33683.5	0.01176	30.0099	14.6079	0 46677		
32506.0	0.24042	30.0303	8.2198	0.27370		

Digitized by Google

RESULTS OF EXPERIMENTS

1 Number of the experiment.	4 Height of the regulating gate, in inches.	8 Number of revolutions of the wheel per second. $\frac{n}{60}$	10 Useful effect, or the friction of the brake in pounds avoirdupois raised one foot per second. U	13 Total fall acting upon the wheel, in feet. H	14 Depth of water on the weir, in feet. h_1	Quantity of water which
4	11.49	1.59651	88348.3	12.554	2.0383	156.
6	"	1.46149	51680.6	12.653	1.9989	152.
8	"	1.30933	66845.5	12.720	1.9536	147.
10	"	1.18460	77154.6	12.800	1.9315	144.
14	"	1.06744	83969.8	12.856	1.9098	142.
16	"	0.99945	86314.4	12.890	1.9048	141.
18	"	0.94507	87392.7	12.880	1.8908	140.
20	"	0.91116	87819.8	12.886	1.8866	140.
22	"	0.89713	88076.2	12.898	1.8834	139.
25	"	0.88496	88189.9	12.899	1.8775	139.
30	"	0.85106	88278.9	12.903	1.8697	138.
31	11.48	1.78971	0.	12.539	2.0891	162.
32	"	0.88624	88320.8	12.915	1.8704	138.
34	"	0.78401	87947.8	12.941	1.8687	138.
35	"	0.74211	87066.5	12.939	1.8652	137.
37	"	0.64568	83965.5	12.940	1.8412	135.
40	"	0.60000	82109.8	12.973	1.8380	134.
41	"	0.58282	78492.2	12.977	1.8282	133.
45	"	1.78333	0.	12.471	2.0864	132.
46	"	0.83207	88603.9	12.954	1.8737	138.
48	"	0.80821	88240.1	12.948	1.8723	138.
50	"	0.76893	87865.8	12.952	1.8694	138.
51	8.55	1.48331	39452.4	12.758	1.9173	148.
53	"	1.14177	74827.2	12.909	1.8656	137.
55	"	1.02459	80215.4	12.950	1.8586	137.
57	"	0.93071	81911.6	12.965	1.8408	135.
59	"	0.86538	82195.5	12.999	1.8240	133.
61	"	0.80429	81786.2	13.026	1.8117	131.
63	"	0.70779	79738.1	13.028	1.8013	130
65	5.65	1.54799	0.	13.170	1.7160	121.
66	"	1.35135	29054.7	13.077	1.6829	118.
68	"	1.08460	53142.4	13.176	1.6409	114.
70	"	0.92348	58727.1	13.253	1.6139	111.
72	"	0.77482	58776.2	13.311	1.5793	108.
74	"	0.68627	56258.1	13.326	1.5541	105.
76	"	0.45662	46056.1	13.412	1.5034	100.
77	9.96	0.85470	86207.6	12.883	1.8620	137.
79	"	0.78918	86164.4	12.912	1.8544	136.
80	2.875	1.24902	0.	13.347	1.2914	80.
82	"	0.96022	21256.6	13.395	1.2492	76.
84	"	0.67189	27985.1	13.478	1.1960	71.
86	"	0.46243	24462.9	13.556	1.1407	67.
90	1.00	0.61958	4998.8	13.985	0.7798	88.
91	"	0.68886	3427.7	14.001	0.7846	88.
92	"	0.38760	7815.6	14.020	0.7653	87.

Digitized by Google

THE TREMONT TURBINE.

16 Total power of the water, in pounds avoirdupois raised one foot per second. u	17 Ratio of the useful effect to the power expended. E	18 Velocity due to the fall acting on the wheel, in feet per second. V^1	19 Velocity of the interior circumference of the wheel, in feet per second. $r_1\omega$	20 Ratio of the velocity of the interior circumference of the wheel to the velocity due to the fall acting on the wheel.	23 Direction of the water leaving the wheel, as indicated by the vane.	
					deg.	*m.*
122663.3	0.27187	28.4169	33.8553	1.19138		
120174.8	0.43005	28.5287	30.9921	1.08635		
116864.8	0.57199	28.6041	27.7653	0.97067	18	3
115667.0	0.66704	28.6989	25.1208	0.87546	22	56
114284.2	0.73475	28.7566	22.6359	0.78716	29	49
114150.8	0.75614	28.7946	21.1940	0.73604	35	37
112848.8	0.77442	28.7835	20.0409	0.69626	41	26
112532.3	0.78040	28.7902	19.3219	0.67113	46	18
112364.5	0.78384	28.8036	19.0243	0.66048	48	26
111859.4	0.78840	28.8047	18.7662	0.65150	50	37
111218.1	0.79375	28.8092	18.0474	0.62645	58	10
126960.2	0.	28.3999	37.9521	1.33635		
111384.0	0.79294	28.8225	17.7330	0.61525	61	54
111463.0	0.78903	28.8515	16.6254	0.57624	86	12
111139.7	0.78340	28.8498	15.7371	0.54549	99	25
109077.1	0.76978	28.8504	13.6922	0.47459	131	18
109077.0	0.75277	28.8872	12.7235	0.44045	139	45
108265.8	0.72499	28.8916	11.2882	0.39071	147	25
126084.8	0.	28.3228	37.8168	1.33521		
112009.3	0.79104	28.8660	17.6447	0.61126	60	52
111832.0	0.78904	28.8593	17.0327	0.59020	66	27
111613.5	0.78723	28.8638	16.3058	0.56492	89	44
111060.7	0.34589	28.6468	31.4548	1.09802	12	0
110917.6	0.67462	28.8159	24.2121	0.84023	22	19
110664.7	0.72485	28.8616	21.7272	0.75281	28	56
109252.2	0.74975	28.8783	19.7865	0.68344	37	47
108082.5	0.76049	28.9161	18.3511	0.63463	47	30
107246.3	0.76260	28.9461	17.0556	0.58022	59	39
106366.6	0.75012	28.9484	15.0091	0.51848	94	4
100194.6	0.	29.1057	32.8262	0.87363		
96699.5	0.30046	29.0028	28.6564	0.85216	6	30
93904.9	0.56592	29.1123	22.9997	0.81828	12	32
92188.4	0.63703	29.1973	19.5831	0.79628	21	17
89707.1	0.65520	29.2641	16.4306	0.76979	39	2
87720.9	0.64127	29.2776	14.5530	0.49707	69	27
84110.0	0.54757	29.3719	9.6830	0.32966	144	56
110380.8	0.78100	28.7868	18.1246	0.62961	55	52
109973.0	0.78350	28.8192	16.7351	0.58069	74	28
66979.0	0.	29.3006	26.4865	0.90396	0	30
64018.1	0.33204	29.3533	20.3622	0.69369	4	32
60424.6	0.46314	29.4441	14.2480	0.48390	20	9
57342.0	0.42661	29.5292	9.8061	0.33208	81	40
33340.8	0.14993	29.9028	13.1386	0.43806		
33683.5	0.01176	30.0099	14.6079	0 46677		
32508.0	0.24042	30.0303	8.2198	0.27370		

Digitized by Google

DCXXXIX.*

EXPANSION BEARINGS FOR BRIDGE SUPERSTRUCTURES.

SECOND PAPER.

BY GEORGE S. MORISON, NEW YORK CITY.

(Member of the Society.)

In the paper on Expansion Bearings for Bridge Superstructures, being DLXVI., presented at the New York meeting in December, 1893,† I described the development of expansion bearings for bridges, and especially the development in my own practice, and closed with a description of the expansion bearing which I had adopted as a standard practice in all ordinary cases, simply varying the dimensions and number of rollers.

Since then I have found it expedient to make certain possible modifications of this bearing. The bearing then described is very high; it requires, below the centre line of the chord, one-half the depth of a stiff chord, besides the depth of the Top Plate, of the Rocker Plate, of the Bearing Plate, of the rollers, and of the Rail Plate. This height can be materially reduced by substituting for the Rocker Plate and the Top Plate a single steel casting, which may be called a Pin Casting. The bottom bearing of the Pin Casting is finished to a cylindrical surface corresponding to the under side of the Rocker Plate, and the upper bearing is taken directly on the end pin of the truss. This arrangement is shown on the accompanying sketch (Fig. 206). The two rocking surfaces at right angles to each other are retained; one of these is the cylindrical surface on the under side of the Pin Casting, and the other is on the pin itself. The arrangement, therefore, adapts itself to all irregularities of bearing as well as the standard with the Rocker Plate does. It is very much more

* Presented at the Detroit meeting (June, 1895) of the American Society of Mechanical Engineers, and forming part of Volume XVI. of the *Transactions*.

† *Transactions of the American Society of Mechanical Engineers*, vol. xv., p. 158.

Digitized by Google

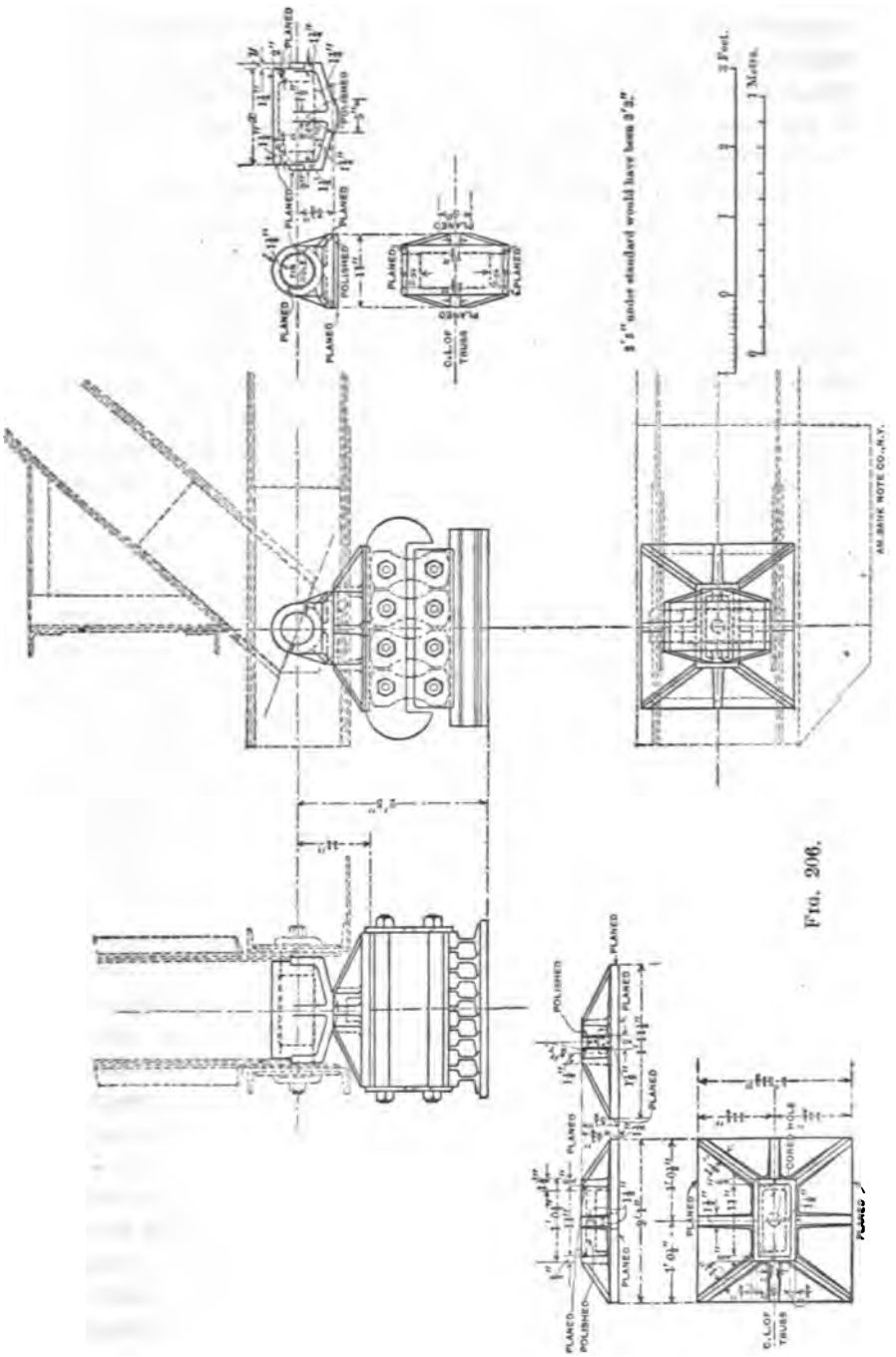

FIG. 206.

Digitized by Google

compact, as, in the small four-roller bearing shown in the sketch, it saves ten inches in height, and the saving would be greater under heavier spans. Where ample height can be had it has no advantages, and even has the disadvantage of making the bearing surfaces comparatively inaccessible.

This modified bearing can be used where the end panel of the bottom chord is of eyebars, the Pin Casting taking the place of the usual bolster. If the standard bearing, as formerly described, is used under a bolster, the pin on which the bolster turns and the rocker plate make two rocking motions in the same plane, a condition which is necessarily unstable. All the older bridges have eyebars in the end panels of the bottom chords. This cannot now be considered good practice for through bridges, though it is, perhaps, all right for deck bridges. The arrangement now described adapts this system of bearing to structures of this class.

The objection has been raised to this form of bearing, that, while it works perfectly well under expansion and contraction, there is danger that the rollers will get out of place under perpetual jar, and will then have to be reset. This objection is not really a serious one, and it applies with at least equal force to the ordinary round rollers, which not only get out of place, but become badly skewed. With the large segmental rollers, however, this difficulty can be entirely obviated, a thing which it is difficult to do with round rollers. Some years ago Mr. C. O. Gleim, of Hamburg, adopted the expedient of toothing the middle roller, the pitch line of the tooth corresponding to the bearing surface of the roller, this arrangement being mathematically correct, but having the disadvantage of requiring toothed side-plates on the upper and lower bearings, which would extend below and above the general surfaces and interfere with cleaning the rollers—an objection much less serious in Germany than along some of our dusty western rivers. Mr. C. C. Schneider, in his recent design for the Blackwell's Island Bridge, adopts slotted bars attached to each end of the central roller, and playing on pins in the upper and lower bearings—a device which seems good.

I have worked out a simple arrangement, adapted to the bearings which have been described in my papers, in which the centre roller is toothed by fitting special steel plates into grooves planed on the axial line at each end, these plates projecting beyond the roller, and forming teeth which mesh into spaces cut in the rail

Digitized by Google

plates below and the bearing plates above. The illustration herewith shows the detail (Fig. 207). It is really a simple modification of Mr. Gleim's plan. It will be observed that, as the whole tooth is beyond the rolling surface, it is beyond the theoretical pitch line; but with the limited amount of motion required this is not a serious defect, and a little play around this tooth will do no real harm.

DISCUSSION.

Mr. Gustavus C. Henning.—I should criticise the author's last arrangement, for the reason that a bar which is supposed to bear the entire strain of the bridge, which must be equal to the

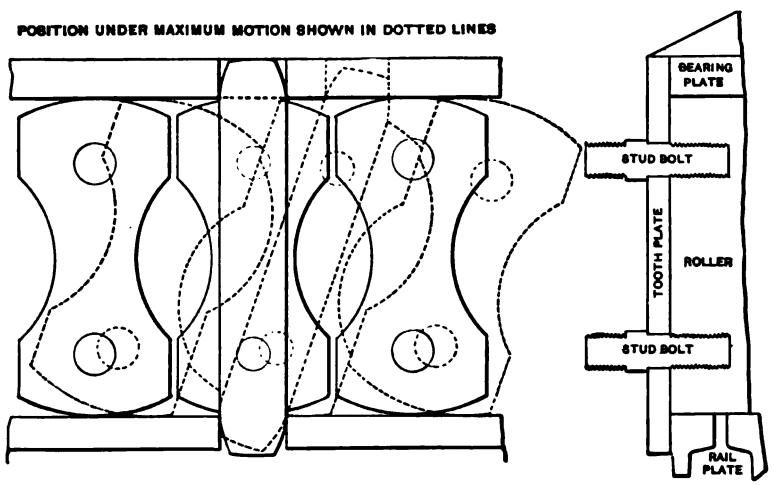

FIG. 207.

frictional resistance of these rollers on the bearing, is counteracted by two little stud bolts, as shown there. Suppose these segmental pins are 10 inches high, then these bolts as drawn are hardly 1 inch in diameter. Now as this bar, which meshes into the plates above and below, is supposed to resist the entire frictional resistance between the plates and the rollers, under the jarring of the bridge, why, that plate should be held rigidly against the rollers with sufficient force to withstand that frictional resistance. If one of the rollers is toothed, why, then, of course, it is provided for; but a simple little plate like that, held by two 1-inch bolts, will certainly be mashed, or the bolts will be sheared off, before the desired effect is obtained of preventing

Digitized by Google

the motion of the rollers either on the bed or on the bearing plate above the rollers.

*Mr. George S. Morison.**—Mr. Henning apparently misses the detail by which the tooth-plates are fitted into the rollers; these plates are accurately fitted into grooves which extend the whole depth of the roller; the frictional resistance is counteracted by the side bearings in the groove, and not by the two little stud bolts.

* Author's closure, under the Rules.

Digitized by Google

DCXL.*

A NEW SHAFT GOVERNOR.

BY E. J. ARMSTRONG, OSWEGO, N. Y.
(Member of the Society.)

PROBABLY the most essential qualification of a good governor is stability. A small drop in speed, under load, usually does no harm, but instability is a fault not to be tolerated; to combine stability, sensitiveness, and close regulation, has always been a

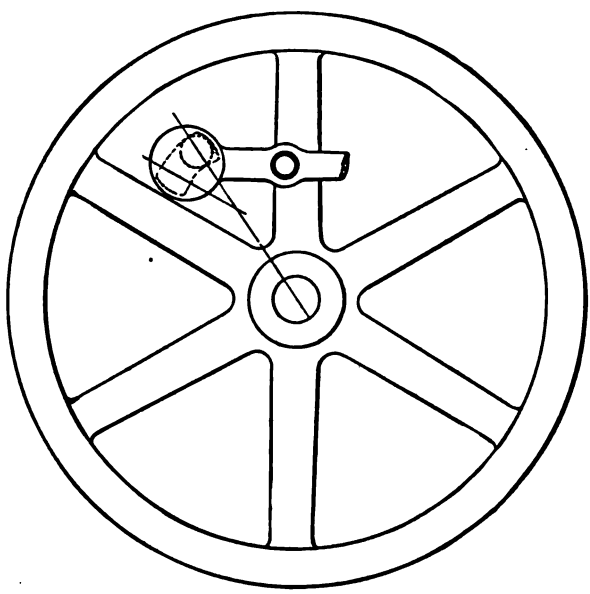

FIG. 208.

difficult problem. In the single-weight type of governor, originally invented by our Past-President, Prof. John E. Sweet, and built by him and others for a number of years, the principle aimed at has been to employ a heavy fly-weight, revolving in the

* Presented at the Detroit meeting (June, 1895) of the American Society of Mechanical Engineers, and forming part of Volume XVI. of the *Transactions*.

Digitized by Google

largest possible circle, and to reduce the inertia and friction of all connected parts to a minimum. So designed, the action of the governor is extremely quick, passing through its entire range in one-quarter of a second, when the full load is instantly thrown on or off. If not adjusted too close to isochronism, the stability is nearly perfect. Two per cent. drop between no load and five-eighths cut-off, equivalent to about one per cent. between no load and one-fourth cut-off, will, at 300 revolutions, give such a degree of stability that, with the load held steady by Prony

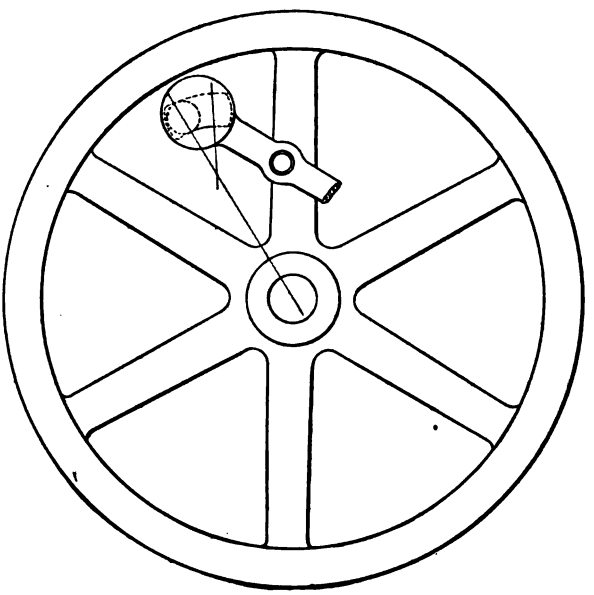

FIG. 209.

brake, indicator cards traced continuously for a minute, show lines only about one thirty-second of an inch wide at any point. Much closer adjustment is liable to develop a tendency to race, and is for that reason impracticable. This unavoidable drop, while very seldom being of any consequence in actual service, has sometimes been urged as an objection, perhaps by the other salesman, and it has seemed desirable to, at least, be able to give closer regulation. Being unwilling to secure a smaller drop in speed by any device which would affect stability, or in any way retard the quick response of the governor to a change in load, the writer devised and built a governor, in which a shifting weight

Digitized by Google

was employed, as shown in Figs. 208 to 210, so arranged that for every position of the governor there would be a corresponding point of equilibrium for the shifting weight. If there is a certain drop in speed between the extreme outer and inner positions of the governor (Figs. 208 and 209), the shifting weight and the curved chamber in which it rolls are so proportioned that its weight, transferred from one position to the other, will just balance this drop, by changing the centre of gravity of the governor weight as a whole, and so maintain a uniform speed throughout

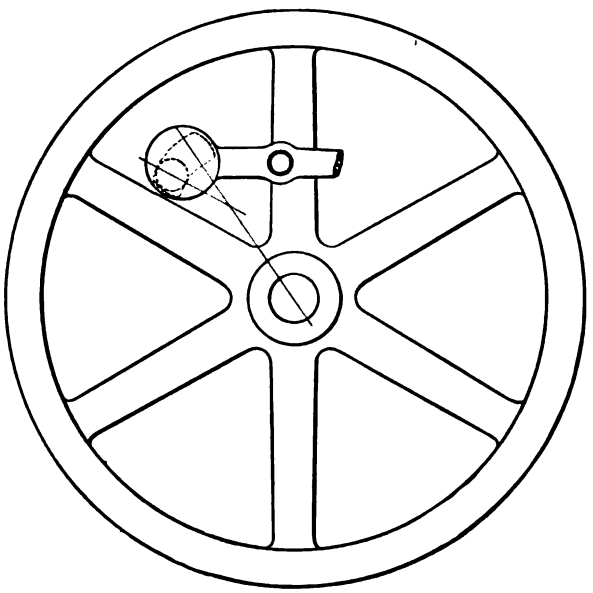

FIG. 210.

the governor range. To illustrate: Suppose an engine, running, say, 300 revolutions without load, and the governor weight in the position shown in Fig. 209, the shifting weight being in its outer position. Upon a heavy load, requiring three-quarter cut-off for its negotiation, being suddenly thrown on, the fly-weight will immediately take the position shown in Fig. 210, and will drop to, say, 295 revolutions; then the shifting weight, being out of equilibrium, rolls over into the position of Fig. 208, in which position its leverage upon the spring is reduced, and it must in consequence run 300 revolutions to again balance the spring. The shifting weight is simply a short, solid cylinder, and the curved

Digitized by Google

chamber in which it rolls is filled with oil. Its fit in this cylinder is sufficiently loose to permit the passage of oil past it, as it rolls from one position to another, thus acting as a dash-pot, to prevent its movements being rapid enough to interfere with the stability of the governor. The effect is to make the governor practically isochronous. Instantaneous changes of load are not usually of large amount, and therefore the error which the shift-

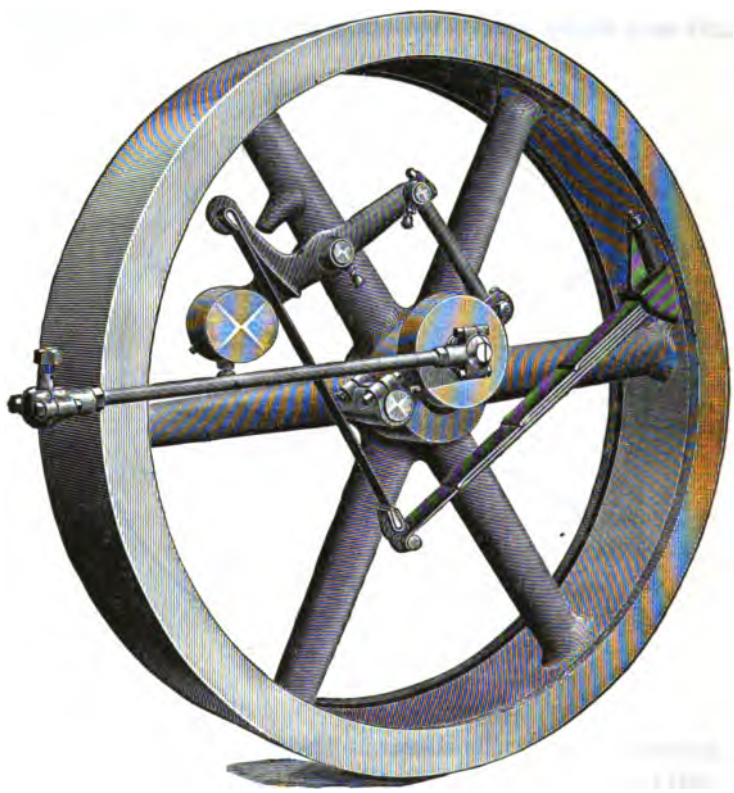

FIG. 211.

ing weight has to correct each time is small. If the loads change more gradually, the speed does not vary at all perceptibly, for the shifting weight corrects for each small change nearly as soon as made. It is entirely practicable to over-correct in this manner, and so produce a governor which will run considerably faster loaded than light. Just how far this can be carried the writer does not know, but its capabilities in this direction are certainly

Digitized by Google

beyond any probable requirements of practice. Arranged in this way, and with the load slowly applied, the tachometer needle steadily moves upward, precisely as with the ordinary governor it moves downward under the same conditions.

A variation of the scheme, upon which the writer is at present experimenting, consists simply in the use of oil or other liquid, as the shifting weight; this has the advantage of permitting a small weight to be shifted through a large range, which is quite desirable, and it is also somewhat simpler, though the device illustrated adds but one moving piece to the governor.

DISCUSSION.

Mr. Robert Allison.—In a pamphlet issued a few years ago by a prominent engine builder (a member of the Society) it was stated that the governor on his engine could be so adjusted that the engine would run faster loaded than light. When I saw the statement I did not place much credence in it, thinking it might possibly be designed merely to assist in the sale of the engine; but when I read Mr. Armstrong's paper on a new shaft governor, and saw the same claim, that his governor could be arranged to run the engine faster loaded than light, I confess I was somewhat staggered in my views. Mr. Armstrong says: "It is entirely practicable to over-correct in this manner, and so produce a governor which will run considerably faster loaded than light." I have given the subject of shaft governors considerable study during the past three years, and have patented a governor (Fig. 212) which I think has some good features, but I have always worked on the lines that there must be a percentage of loss in speed between no load and load, and *that* takes place in all governors which depend on centrifugal force for their action. I think it will be admitted that load has no effect on the governor except through a change in speed, and that the governor will adjust itself to the speed. Should the engine be running 300 revolutions the weights will take a position due to the centrifugal force, regardless of the load, and the weights will always take the same position at the same speed. The time required for the weights to adjust themselves from one speed to another can be modified by the interposition of dash-pots, springs, angular tracks for loose weights to travel in, and other means; but, all the same, the weights will finally adjust themselves to the speed, and it can hardly be expected that because the load is light in the morning and heavy in

Digitized by Google

the afternoon that the weights will adjust themselves so as to give the increased quantity of steam required for the increased load, and the speed remain the same. I am open to conviction in this matter, and would be very glad indeed to have Mr. Armstrong, or any other member, put this matter in such shape that I can understand why the governor weights should take one position to-day, with a speed of 300 revolutions, and another position

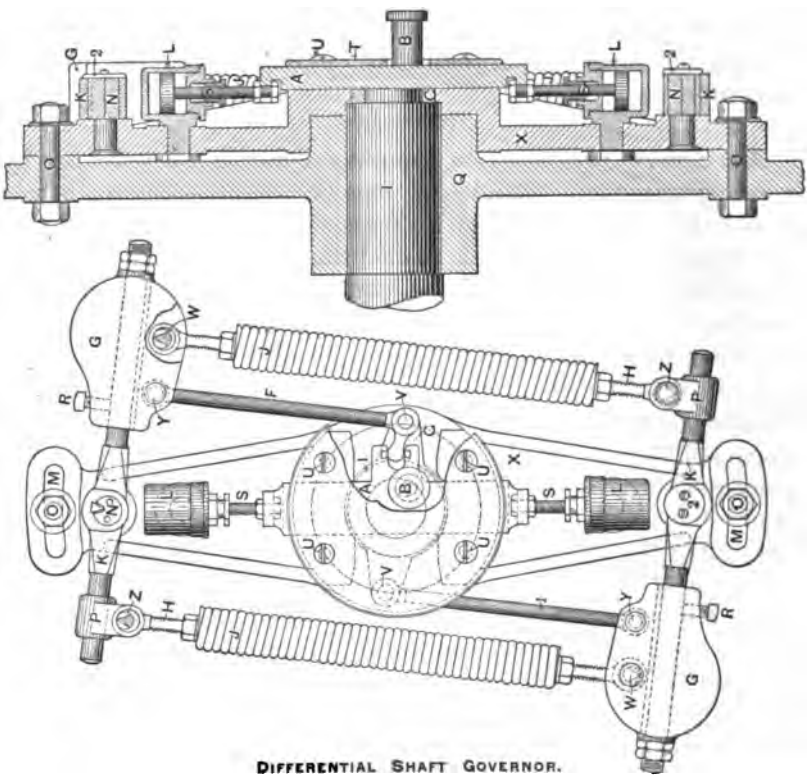

DIFFERENTIAL SHAFT GOVERNOR.

FIG. 212.

to-morrow, with the same speed. This brings us back to the proposition that there must be a percentage of loss in speed, in changing from light to load. This percentage can be reduced by various means, but if carried too far, the stability may be affected. I hope I have made my position clear in this matter, and if I am wrong I may be set right.

In connection with my governor, which loses in speed when the load goes on, which I claim must be the case with every governor

Digitized by Google

made that depends on centrifugal force for its action, if anybody here is interested in a governor that will not increase in speed as the load increases, this is the governor that will suit him. The flying weights and springs are mounted on differential levers, with knife-edged bearings, thus reducing the friction to the minimum; the weights act directly on the sliding bar and pin, which gives motion to the slide valve; the elongation of the springs in action is adjusted by shifting the spring connection on the levers; moving toward end of lever lessens the elongation, and moving toward fulcrum increases the elongation. The tension of the springs is regulated by the right and left hand screws in the ends of springs, and can be adjusted to any speed or work to be done. The movement of the sliding bar is controlled by dash-pots, which prevent a too sudden movement of the bar, and prevent the annoying see-saw movement found in many engines of this class. Another important feature is the provision for changing the lead on the slide valve. By slacking two nuts the whole governor can be moved backward or forward, thus giving more or less lead to the valve, making it possible to adjust the valve in a few seconds to the most advantageous point.

The regulation and uniformity of motion by this governor are all that can be desired, the actual variation in speed, from no load to full load, being less than 1½ per cent.

I am not here to claim that the engine will run faster loaded than light with this governor. I will just state further, that, since writing this criticism on Mr. Armstrong's governor, I have been informed that there are several engines in Detroit that run faster with the load on than with the load off. I think this is rather a reckless statement, but still it may be so.

Prof. John E. Sweet.—I am afraid, if we open this governor question, we shall not get through to-day. I want to say, in regard to Mr. Armstrong's device, that the worst thing about it is that it works. He is entitled to a good deal of credit for the simplicity with which he has accomplished that thing, if it is at all desirable. I question the desirability of it, because, as he states the case, it runs at 300 revolutions, and when he puts on a load his engine falls to 295, and again speeds up. The question is, whether we would rather it would fall off to 295 and go up to 300 than to fall off to 298 and stay there? There is another consideration of the question that has occurred to me—that we all of us have been working on the wrong line. If an engine is running 300 revolutions, and we

Digitized by Google

put on a load and bring it down to 298, we have all wanted the governor to get there as quickly as it possibly could. Now that is not what we want to do at all. It should be the *longest* possible time in getting down to 298; in fact, we would rather it would never get there at all.

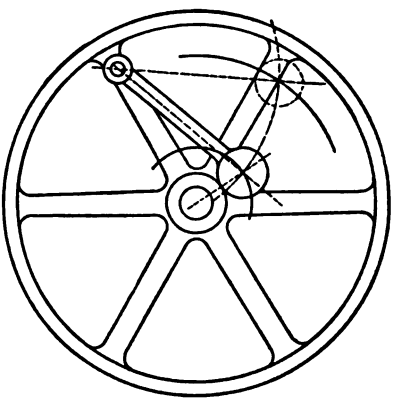

SHOWING LONG RADIAL RANGE.

FIG. 213.

Mr. John A. Brashear.—I think that is the case with Mr. Sweet's straight-line engine and governor, which I think is the best engine in the world. I believe I did detect a difference of 1 revolution in

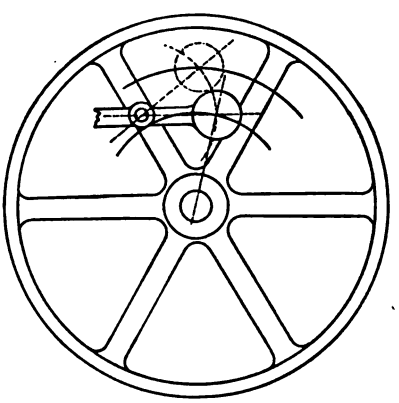

SHOWING MEDIUM RADIAL RANGE.

FIG. 214.

210, between throwing on a heavy dynamo which put on 5 horse-power and a lot of other machinery. In fact, I don't think I want anything better than that governor.

Digitized by Google

Mr. Ezra Fawcett.—In a shaft governor combining stability, sensitiveness, and close regulation, the governor weights should pass through as short radial range as consistent with their inner and outer working position. In practice with long range (Fig. 213) and short radial range of governor weights (Fig. 215), the short or medium range fulfils the requirements more satisfactorily, with close regulation of less than 1 per cent., and the tendency to racing reduced to minimum.

The stability and quick action of the single-weight shaft governor (Fig. 214), by Prof. J. E. Sweet, in the paper, is due to its simplicity, medium short radial range, and balance of eccentric

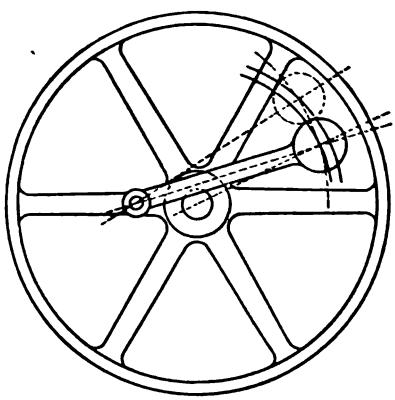

SHOWING SHORT RADIAL RANGE.

FIG. 215.

and its connections. As to the author's further experiments with his shifting weight, *within* the *governor weight proper*, I hope he will present the results to this Society at an early date.

*Mr. E. J. Armstrong.**—This paper was written to bring to notice a device for obtaining isochronous governing, and not to advocate its use; indeed, the remark is made that "the unavoidable drop of the ordinary governor is seldom of any consequence in actual practice." Many designers have thought otherwise, and have brought out more or less complicated devices to secure the same speed at all loads; hence it was thought that the accomplishment of this purpose by the use of a single additional piece might be of interest. Professor Sweet says it would be better not to drop to 295 and then come back to 300, but to go down to 298 and stay there, which is all right, only it happens:

* Author's closure, under the Rules.

Digitized by Google

First. That nobody builds a governor which only lets the engine slow up 2 revolutions upon throwing a three-quarter cut-off load on instantly; indeed, it is hard to prevent it dropping 10 revolutions for the instant; and aside from this momentary fluctuation, if any one, without special devices, governs closer than 5 revolutions for the total governor range, the writer is not aware of it.

Second. This device does not interfere in the least with the usual action of the governor, so far as causing it to drop off more is concerned; and

Third. If the load is applied slowly, as is usual in most work, the speed does not change at all perceptibly, for each small change is corrected nearly as soon as made.

The writer must take issue with Professor Sweet when he says we don't want to govern quickly. The principal reason his governor is better than a good many others is because it is quicker, and if it were twice as quick, it would stand sudden changes of load still better. The proof is the momentary fluctuation. Small changes of load are no test. Throwing 125 horse-power instantaneously off and on a 100-horse-power engine tells the story, with the aid of a good tachometer.

Mr. Allison questions whether a governor can be made to run faster loaded than light; this has been accomplished by so many different persons, and in so many different ways, that it hardly needs an argument. He mentions the position of the weight as depending on the speed, and, reasoning in that way, is unable to see how it can take different positions at the same speed; the position of the weight really depends on the load, for the weight goes where it will admit steam enough to carry the load, and the speed is that necessary to enable the weight, while in this position, to balance the spring. Now, if one could get at the governor weight while running, and take out or put in some weight, no one will question that the speed would become faster or slower, as the case might be, and that, in effect, is what this device does.

Digitized by Google

DCXLI.*

THE STRENGTH OF IRON AS AFFECTED BY TENSILE STRESS WHILE HOT.

BY DE VOLSON WOOD, HOBOKEN, N. J.

(Member of the Society.)

In order to determine the effect of subjecting iron to a stress while hot, I had twelve specimens of good iron prepared for the testing machine by making the middle portion for about five inches cylindrical, and 0.770 inches in diameter. Two of these were broken cold, to determine the strength in its normal condition, the mean value of which was 50,500 pounds per square inch. Six of the others were heated in a forge to a dull red heat, and at once subjected to a pull of 4,200 pounds, being one-fifth the strength indicated by the first two specimens, and the stress remained uniform for fifteen minutes, after which they were removed from the machine and allowed to cool, some in water and others in air. It is not apparent that the manner of cooling made any difference in the ultimate strength. The six pieces gave the following results:

Maximum strength	51,330	pounds	per	square inch.
Minimum "	47,720	"	"	"
Mean of the six specimens	49,765	"	"	"

Four specimens were heated in a similar manner, though some of them were made somewhat hotter, and subjected to a uniform stress of 5,700 pounds, being about one-quarter the strength indicated by the two first specimens, and the stress continued for about fifteen minutes. They were afterwards broken cold, with the following results:

Maximum	51,150	pounds	per	square inch.
Minimum	48,290	"	"	"
Mean of the four	50,026	"	"	"

The mean results indicate that there is a slight diminution of strength by stretching iron when hot, but if the stress does not

* Presented at the Detroit meeting (June, 1895) of the American Society of Mechanical Engineers, and forming part of Volume XVI. of the *Transactions*.

Digitized by Google

TEST, BY TENSION, OF SPECIMENS, AFTER HEATING AND COOLING UNDER STRAIN.

Condition of Specimen.			Specimens Strained while Heated.					Specimens Broken after being Allowed to Cool.							Remarks.
Laboratory number.	Original Dimensions		Degree of heat applied.	Loads to which specimens were subjected while so heated.	Length of time that this load was maintained.	Elongation produced by Loads given in Column 5.		Method of cooling specimens after removal from machine.	Elastic Limit.		Breaking Load.		Elongation.		
	Diameter.	Distance between prick-punch marks.				Actual.	Per cent.		Actual.	Pounds per square inch.	Actual.	Pounds per square inch.	Actual.	Per cent.	
1	2	3	4	5	6	7	8	9	10	11	12	13	14	15	
	Inch.	*Inches.*		*Lbs.*	*Min.*	*Inch.*			*Lbs.*	*Lbs.*	*Lbs.*	*Lbs.*	*Inch.*		
3735	0.770	5	*	....	...	....	....	.....	15,500	33,260	23,390	50,190	0.94	18.8	* Not heated.
3736	0.769	5	*	...	....	....	....	.....	.....	.....	23,580	50,820	1.24	24.8	* Not heated.
3737	0.770	5	Dull red	5,700	15	0.08	1 6	Water.	16,750	35,940	23,510	50,450	1.09	23.4	
3738	0.771	5	" "	5,700	15	0.23	4.6	"	15,500	33,190	22,550	48,290	0.76	15.2	
3739	0.770	5	" "	4,200	15	0.02	0.4	"	14,000	30,040	23,380	50,170	1.32	26.3	
3740	0.770	5	" "	4,200	15	0.28	5.6	"	15,250	32,720	22,240	47,720	0.74	14.0	
3741	0.770	5		4,200	15	.0	.0	Air.	14,500	31,120	23,630	50,710	1.38	27.6	
3742	0.770	5		4,200	15	.0	.0	"	.....	.....	23,620	50,690	1.06	21.2	
3743	0.770	5	Dark red, just discernible in bright daylight.	5,700	15	0.02	0.4	Water.	15,500	33,260	23,410	50,240	0.98	19.5	
3744	0.771	5		5,700	15	0.02	0.4	"	15,500	33,190	23,890	51,150	1.10	21.9	
*3745	0.771	5	Dull red	4,200	30	0.32	6.4	Air.	15,000	32,120	22,400	47,970	0.88	16.5	* Diam. after stretching hot, 0.735 inch.
*3746	0.771	5	" "	4,200	30	0 03	0.6	"	15,000	32,120	23,970	51,330	1.11	22.06	* Diam. after stretching hot, 0.765 inch.

Digitized by Google

ceed one-quarter of the ultimate strength, the loss of strength scarcely more than 1½ per cent. The accompanying table dicates that unless there be a perceptible elongation while t, the specimen is not weakened by the treatment. Thus, one ecimen elongated 0.23 of an inch for a length of five inches, der a stress of 5,700 pounds; another 0.28 of an inch for the ne length, under a stress of 4,200 pounds, and still another 2 of an inch, for the same length and stress as the former es; and *these were the only specimens which broke at less than* 000 pounds per square inch. It is probable that these were tter than the others when the stress was applied, as the eye s the only guide for determining the degree of heat.

DISCUSSION.

Mr. Gustavus C. Henning.—It seems to me that the conclusions this paper might have been anticipated in advance of the periments. It was certainly to be expected that when the tion of a bar of iron, while hot, is reduced, that it cannot carry great a load as when larger, before reduction, and such re-ction of strength is proportionate to the reduction in size. In her words, a large bar is stronger than a small one.

In test 3738, the test piece is reduced 4.6 per cent. while hot; en, after cooling, the strength is reduced 4.4 per cent.

In test 3740, the test piece is reduced 5 6 per cent. while red t; then, when tested cold, it shows 5.5 per cent. less strength an before.

In test 3745, the test piece is reduced 6.4 per cent. while red hot, d we find the cold test shows 5.1 per cent. less strength.

Taking the actual strength of the iron as 50,500 pounds, as ven, page 739, then these test pieces, 3738, 3740, and 3745, after ating, stretching, and cooling, should have shown tenacities re-ced by 4.6 per cent., 5.6 per cent., and 6.4 per cent., or 48,177 unds, 47,672 pounds, and 46,268 pounds; but they actually owed 48,290 pounds, 47,720 pounds, and 47,970 pounds tenacity, hich are such slight differences as to be negligible.

Now, when we consider that the temperature was guessed at, and at the error of observation in the testing machine and of meas-ements might have been each at least ½ per cent., and that the dividual machines might vary more than 1 per cent., it will be once apparent that we don't know any more about iron now, ter these tests were made, than we did some thirty years ago.

Digitized by Google

DCXLII.*

THE OLD AND THE NEW.

BY ROBERT ALLISON, PORT CARBON, PENN.
(Member of the Society.)

AT a reunion held at the house in New York of the American Society of Mechanical Engineers, in April, 1893, one of the speakers† made some remarks in reply to the presentation to the Society of a portrait of the late Mr. Harrison of locomotive fame. In his remarks he stated that the mechanics who constructed the first locomotives, with the tools and appliances then available, deserved more credit than the mechanics who build the splendid machines of the present day. Having this in mind, I thought it might interest some of the younger members of the Society to learn of the difficulties and trials of the old-time machinists, of which the writer was one.

It is now about fifty-one years since I first entered a machine shop as an apprentice, in 1844, my first experience being in the shops of Haywood & Snyder, at Pottsville, Penn. The shops were considered as well equipped as any in the interior of the State; there were two or three slide lathes (not screw cutting) in the shop, but most of the turned work was done with the slide rest, and all the small turning was done with hand tools. There was one planing machine in the shop, the table being pulled back and forth with a common one-half-inch chain. I recollect that this chain would break frequently, sometimes two or three times a day, so a number of open links were kept on hand to make quick repairs. The cross feed was automatic; all other feed directions were by hand. Those of you who have had any experience in a modern shop will appreciate the difference between those crude machines and the machines now in use.

The work done in the shops was principally steam engines,

* Presented at the Detroit meeting (June, 1895) of the American Society of Mechanical Engineers, and forming part of Volume XVI. of the *Transactions*.

† Mr. J. F. Holloway, of New York, ex-president, received in the name of the Society the oil portrait of Mr. Joseph Harrison, the gift to the Society from his widow, through the influence of his nephew, Mr. Henry Harrison Suplee.

Digitized by Google

and, notwithstanding the poor facilities, many good engines were turned out, some of which are in use to-day.

After working in the Pottsville shops about one year, I was sent to Danville, to the branch shops in that place, my masters having taken the contract to make the machinery for the Montour Rolling Mills, the first mills in the United States to make "T" rails. The mills were constructed under the supervision of Mr. Henry Brevoort—some of you may remember him, as he was located in New York after leaving the Montour Mills. I shall always have pleasant recollections of Mr. Brevoort, as he took special interest in me and my work, and would frequently insist on certain pieces of work being placed in my hands for execution; for, while I was only an apprentice, he thought that I did better than some journeymen.

The shop was equipped with two large lathes, thirty-six-inch swing, mounted on heavy wooden shears, and the turning was done with heavy slide rests; there were also three smaller lathes on wooden shears, with slide rests; and two hand lathes, operated exclusively with hand tools; also one drill press and one screw-cutting machine—this constituted the whole plant.

The whole of the rolling mills proper were built in this shop, the engines being built in the Pottsville shops. In the early days of rolling mills, you remember, the engines were made long stroke, usually six feet, and the rolls were driven with gearing so as to get up the proper speed, the piston speed of the engines being about three hundred feet, the gear wheels being large in diameter; there were no facilities for boring the hubs, and they had to be keyed on the shaft with six or eight keys. This necessitated much chipping of key seats.

Shafts were all made of cast iron of large diameter, with bosses in proper places for wheels; the bosses were turned off, and then eight flat places were chipped and filed true for keys, the wheel hubs were cored out about one and one-half inches larger than the shafts, and eight key seats cut of proper width and taper, according to the size of the shaft; then the wheel was staked on the shaft with four short wedges on each side, leaving four of the key seats clear. It required considerable skill to get the wheels true on the shafts, and but few were able to make a good job. After the wheels were staked on true, four of the keys were fitted and driven home, the stake wedges removed, and the other four keys fitted. Large cranks were fitted to shafts in the same

Digitized by Google

way. The whole operation required a great deal of skill, and unless a man was an expert chipper and filer he would make very slow progress. The turning of large shafts was slow and tedious; the writer remembers having a cast-iron shaft ten inches diameter and about ten feet long being given to him to turn on a hand lathe, with hand tools, the slide rests all being in use, the tools used being hook tools, "V" and round nose, button and spike heads. Just imagine the feelings of a machinist of the present day if confronted with a job of that kind! I also remember another job that almost made me sick: this was forty set-screws, one and three-quarters inches diameter, about four inches long; the iron was seamy and hard, they had to be turned from point to head and thread chased the whole length. You can hardly imagine the condition of mind I was in by the time I finished the last screw; and I think that if there had been about five more in the lot, the country would have been obliged to get along without my services as a machinist, as I would have quit the business in disgust.

The chasing of screws by hand was one of the things we all had to learn. Starting the thread properly required considerable skill; drunken threads were rather common, and subjected the producers to considerable ridicule in the shop. All plane surfaces had to be chipped and filed, no matter what size, and good chippers were always in demand. Engine guides were made round because shops had no planers to plane them if made flat; and when the first flat guides were made, they had to be chipped and filed; connecting-rod stubs were fitted the same way. Notwithstanding all these drawbacks, very good work was turned out, some of which will compare favorably with the work of the present day. We still have some old fogy machinists who claim that the work of the present day does not compare with old-time work, when accuracy and finish depended on the skill of the workman rather than on the accuracy and automatic operation of modern machinists' tools. The writer has had considerable experience in old-time methods and with modern tools, and has no hesitancy in saying that the work of the present day is far superior to what was turned out by the old methods; but, as Mr. Holloway said in his remarks, the wonder is how such good work was turned out with the limited appliances at hand, and the mechanics of fifty years ago deserve more credit for their productions than those of the present day.

Digitized by Google

It may interest some of you to have a short account of how a steam engine was produced fifty years ago in the shops where the writer learned his trade. First a large drawing-board was prepared, large enough to make a plan and side elevation, full size. Engines all being made very long stroke, the drawing-boards were quite large; an engine of fourteen inches diameter, forty-eight inches stroke, taking a board about six by twenty feet. The engine was plotted down, lines chalked and leaded; patterns were then made to correspond to the drawings, castings were made and fitted, but connecting-rod, piston-rod, valve-rods, etc., were left till the cylinder, guides, and pillow-block were fitted on bed-plate. Measurements were then taken for the different rods, and the rods made the proper length to fit. No two engines were exactly alike; variations in shrinkage and fitting were adjusted in the length of the rods. Generally, after the first engine was made, the drawings were planed out, so that the drawing-board could be used for another size. This destroyed the record of sizes, but as all rods were measured for each particular engine, this did not interrupt the work of construction. I need not refer to the present methods in this line, as you are all familiar with them. To-day almost every part of an engine, or other machine, could be made in different shops, widely separated, and then assembled into a complete machine without a hitch. This would have been impossible under the old plan. Taking all the disadvantages into consideration, the wonder is that the mechanics of fifty years ago could turn out as good machines as they did.

President Davis, of the Society, remembering the equipment of the Haywood & Snyder shops when he took charge of them, might contribute some interesting material; but at that time they were much improved over what they were when the writer served his apprenticeship in them. I trust he may be able to add something of interest to what I have said on this subject. We would be glad also to hear from those who labored in other lines and in different places.

DISCUSSION.

Mr. Samuel Webber.—When I first went to Lowell, in 1841, I made the acquaintance of old John Dummer, who had built all the wooden water-wheels then in use there, and who came from

Digitized by Google

the family from which "Dummer Academy," at Byfield, Mass., was named. Afterward, in 1847, I worked a year under Captain Phinehas Stevens, who built the "Bay State Mills" at Lawrence, Mass., and put in the last large "breast-wheels" used in New England, so far as I know. The old Masonic emblems of the "level, square, and compass" were the principal apparatus used, and the "broad-axe" was one of the most familiar and useful tools. The old "surveyor's compass" was used in laying out the ground, and the "level" was practically as good then as now. "Lathes" for turning wooden columns, shafts, etc., had long timber beds, and were often set up in a convenient sawmill, and the tool, held in both hands, had a long wooden handle which would reach back under the arm. Large curved work was usually "*scribed* out" on the attic floor of the carpenter's shop, and the "cooper's adze" and "draw-knife" were also important tools in working out these curves. Water-wheel shafts were usually made of wood with cast-iron "gudgeons," and cast-iron in short lengths was generally used for shafts. These were usually square, but I remember when the late E. A. Straw, of Manchester, N. H., who had been sent to England to examine mechanical matters, came home and fitted up one of the "Stark Mills," in Manchester, with hollow cast-iron shafts which were round. These were afterward taken out and solid wrought-iron shafts put in their place, which gave the mill an enormous load of unnecessary dead weight.

Mr. Straw had been brought up by Mr. Boyden, of turbine celebrity, and had commenced engineering on the Nashua and Lowell Railroad.

The large pulleys of those days were all made of wood, on cast-iron hubs and spiders, a form to which we are now returning.

Leather belts were made on the spot as wanted. There was no such thing as a ready-made belt in the market. All the mills and shops bought their leather from the tanners, by the side, and each establishment had its "belt-shop," where the hides were cut up and stretched, and afterward the edges "trued," and cemented, stitched, or "pegged" together, wooden shoe-pegs being often used for this purpose. Machine tools were few to those of the present day. The iron planer had just been introduced, and the engine lathe was still a novelty The first tool I ever worked on had V ways, which had been chipped by hand, and "draw-filed" to a straight-edge!

Digitized by Google

Donkey engines were unknown, and all heavy lifting was done by animal muscle applied to levers, or ropes and pulleys.

Dams were usually built of timber, filled in with rough stone, planked on the upper side, and loaded with gravel, and were a prominent feature in the work of the millwright, as were also the flumes or feeders for conveying the water to the wheels, which were square, and made of planks "keyed up" in timber frames.

Large pipe, either of cast or wrought iron, was unknown. When turbines came into use, the feeders were often made round, of wooden staves, hooped with iron, like a barrel.

Mr. William E. Worthen.—It is my impression that not only the "large pulleys were built on cast-iron spiders," but that all pulleys were built up in this way in the early days, making a drum of uniform diameter for nearly the whole length of shaft, and that the shafts were of cast-iron; and even if of wrought iron, nothing was turned except the journals. There was an advantage in these long drums, that the machines which they drove could be readily shifted laterally and larger drums could be readily constructed on them by board laggings when necessary for a change speed on the machines. The ends of these drums were closed to prevent dust from getting into the central space, and these ends were painted a dark green, which was a favorite color for the frames of machines, which were at that time invariably of wood, usually ash. All machinery of the Lowell Manufacturing Company was made after the designs of Paul Moody, at Waltham originally, afterward at Lowell, and no change was allowed to be made by any one except with his approval. At the shop there were foremen of the different rooms appropriated to the different machines, to whom the work was let by contract.

The machine-shop furnished, set up, and started the machinery of the mills. The superintendents of the mills were not mechanics or manufacturers. The machine-shop furnished machines and was responsible for their working. No alteration was allowed, and the superintendent had charge of the work-people. They compared the results of the same class of work in the different rooms of their own and other mills, took charge of the boarding-house keepers and the morals of the operators. Under these regulations the mills were a success; but in 1831 Mr. Moody died. There were now many other cotton mills in operation and throughout the country, and soon the

Digitized by Google

directors of the companies were alive to the new ideas, that there were other machines than their own, and which were improvements in the quantity or quality of the products.

I recollect when the first Whitworth planer was introduced at the machine-shop, and went to see it at work, and could appreciate the amount of chipping that it would save. Early in the forties, the Lowell Manufacturing Company took a contract of the Reading Railroad for the construction of freight cars, of which the pedestals were made of a single plate of wrought iron and the jaws punched out by a hydraulic press.

George W. Whistler came to supply Mr. Moody's place, and locomotives were undertaken at the shop, and I had the advantage of seeing the great trouble and trials in working out new designs much larger than the English ones.

Colonel Webber refers to *old* John Dummer—he was about fifty at the time. As a millwright, he was the best I ever knew. His designs were good; he took charge of his work personally, never talked but little to his men; in fact, never to any one unless it was necessary, and his work was joiner work. He would never loan on interest, as he called it usury.

He built the first wheels at Lowell in 1822, and none of them were, I think, ever renewed. The entire fall was at first thirty feet, which was used as a whole at the Merrimac Mills, but at the other mills in divided falls of seventeen and thirteen feet, as the power could be thus distributed, and sales of real estate extended. The wheels were of one type, wooden breast-wheels with cast-iron shaft, in two pieces, coupled together at the centre, by a socketed hub; on the journal ends there were large flanges with sockets. Three sets of arms were fitted to these sockets, and braced from the ends to the central arm. The gates were horizontal, sliding over apertures leading vertically down to centre of the buckets, usually in three tiers, the lower one being detached except in cases of low water.

Mr. Dummer continued to build these wheels till the introduction of Boyden's turbines, and, although the first ones had wooden flumes, he never took kindly to them or had much confidence in the results, and gave up his business as a millwright and removed into the country.

As the construction of turbines with the precision required by Boyden was then beyond the capacity of most of the mechanics of that time, Mr. Boyden attended to it personally.

Digitized by Google

In testing the wheel every observation was made independently by two parties, nor was there any connection between other parties of the test, those at the weir with those at the wheel, and Mr. Boyden made separate observations of his own, with the notes of continuous observations. Thus complete, the percentage of effects at different speeds and openings of gate could be readily separated and calculated.

Mr. Boyden came of a remarkable family, strong generally, physically and mentally, of which Seth Boyden was another. In addition to his mental activity, he had wonderful persistence; without anything but a common school education, he made his calculations and design with confidence, and the results were what was looked for, but not in money to him.

In his design and construction of the turbines for the Atlantic Mills, of Lawrence, Mass., there was so much delay in construction that the company could not afford them for as long a test as he wished, and to determine the percentage of effect, which was a factor in his remuneration, a commission was appointed of Judge Parker, Prof. Benjamin Peirce, and Mr. James B. Francis, who returned a verdict of considerable over ninety per cent. The factors of the calculation were head of water, speed of wheel, drawings of guides and wheel, and velocity of issue with its direction, that is as far as I recollect. Mr. Boyden made his calculation by arithmetic approximations, but, as Mr. Francis told me, Professor Peirce said that the results were correct, but showed that the work of months by Mr. Boyden, with his usual checks by different calculators, could have been resolved in minutes by use of calculus.

At the Nashua Mills he persisted for months to find out the reason for the smaller percentage than what he expected, keeping his assistants at work during mill hours in the week and also on Sundays, and to their remonstrance that it had got to be monotonous, changed the dinner time of Sunday from half past twelve to one P.M.

He found the why—it was the reduction of the depth of the guides about two inches.

It has been a pleasure for me to look back and see what I could recollect, but if it were like a civil service examination I could answer interrogatories better.

Mr. Olin Scott.—The millwright of fifty years ago was the mechanical evolution of the preceding ages from the times of Archi-

Digitized by Google

medes, and was supposed to know everything pertaining to machinery and mills, from a watch movement to a fifty-foot overshot water-wheel.

Before describing anything pertaining to the methods and apparatus in use by millwrights in the past, it may be well to call attention to some of the methods and apparatus which we did *not* have at the time I first began working at millwrighting fifty years ago.

At that time there were only three or four short railways in the country, and those amounted to very little as a means for doing business. Steamboats were the "*ne plus ultra*" of human achievement at that time. Just imagine this country to-day without its railways. At that time there were very few steam engines on land, and those used wood for fuel. I travelled a long distance to see the only one running, in a city of thirty thousand inhabitants in the State of New York. The telegraph was unknown. The planing machine for planing and matching boards, known as the Woodworth planer, was not in general use; and the Daniels planer, for planing timber straight and true, was only found in a few establishments, and the same may be said of the iron planer now used in every machine shop. The band saw was unknown, and the circular-saw for sawing lumber was in but a few mills in the country. Many of the tools in the millwright's tool-chest were of the antiquated English style. No ready-made shafting or pulleys were kept on hand. Ready-made belts, crudely made, were just coming into use, and many belts were home-made. Rubber belting and other rubber goods were unknown.

No ready-made bolts or lag-screws were to be had. The blacksmith made all bolts, and cut the threads by hand, making them cost fifteen to eighteen cents per pound, and of inferior iron and workmanship; so that a good millwright, who then worked for $1.25 to $1.50 per day, would work a whole day to make some wooden device to save six or eight pounds of bolts

Nearly all machinery was driven by water-power, and all good mills used the overshot or breast wheels, except sawmills having the old-style vertically reciprocating saws, some of which used "reaction" wheels, and very few wheels of 100 horse-power were to be found.

The largest and most powerful wheel in the country at that time was an overshot wheel sixty-two feet diameter, at the Bur-

Digitized by Google

den Iron Works, at Troy, N. Y. At about the time mentioned, the first turbine wheels for heavy work were put in the cotton mills at Lowell, Mass. They were of the Fourneyron type, and gave good results; but the cost of such wheels placed them beyond the reach of most mills in the country for many years, so the old millwright was left to plod along in his old way for some years, building overshot and breast wheels, with wood shafts, having cast iron "gudgeons" for bearings, which wheels most of the mill-owners believed could not be equalled for efficiency, to say nothing of being superseded by the "new-fangled" iron wheels, as they were called.

In those days, if a water-power was to be developed, the millwright was the man who engineered the building of the dam, races, flumes, and wheel-pits; determined the size of water-wheels required, designed the buildings, located the machinery, and arranged the shafting and gearing, also determined the sizes of the gears, shafts, pulleys, and belts to transmit the power to the several machines.

Large pulleys of six feet diameter or more were little used, and were mostly made of wood by the millwright, and large belts such as now universally used were not made, cast-iron gears and frequently cast-iron shafting being used for heavy transmissions of power. Mortise gears for wood teeth were occasionally found, but could be made by only a few shops in the country, and the rough iron pinions which worked with the mortise gears were fitted with cogs of no particular form, some of which were short-lived noisy affairs, while others would run well a long time. Many mortise gears were made by millwrights entirely of wood. I was once the owner of a grist-mill, which was fitted to grind feed (from corn in the ear), corn meal, buckwheat flour, and wheat flour, the mill having, in addition to the mill-stones, the usual outfit of elevators, "smutter," hulling machine, conveyor, Boults reels, corn cracker, and hoisting rig to take grain from a wagon at the door; and the only belts in the mill were the canvas belts in the elevators and conveyor, to which the cups were attached, and one leather belt to drive the smutter, for cleaning the wheat, and the mill ran many years in that shape before I owned it.

The great amount of experience or practice necessary to qualify a man to be a successful millwright required a large portion of a lifetime, and when we look about us to-day and see how the

Digitized by Google

field of mechanical knowledge has enlarged from a little garden patch to a boundless prairie, and each branch has become a separate department of work more or less scientific in character, and requiring and employing men of the highest ability, we can realize that the progress has been simply enormous.

There is considerable knowledge worth saving from the old millwright practice, which is indispensable to the man doing such work to-day, and I am reminded that few young men are now learning the business, while the demand for practical and reliable millwrights is increasing every day, and I have been puzzled to explain or to understand why our Society of Mechanical Engineers have so completely ignored the subject. While a large part of the motive power which is moving the machinery of the world, and which is now being largely used to generate electricity, is water power, it seems strange that so great part of the time and efforts of every one should be devoted to steam power development and so little to water power, which I think is of equal importance.

Mr. Ezra Fawcett.—The paper just read brings up memory's retrospect as a passing dream, though I cannot go much back of the fifties. Well do I remember, as one of the sensations of the day, the first direct-acting, high-speed sawmill engine built by that venerable millwright and pioneer of The Buckeye Engine Company, Mr. Thomas Sharp, of Salem, Ohio, now over eighty-six. When I was an apprentice, we simply had parts and plans on a poplar board, roughly pencilled and chalked in, as stated in the paper; nothing like details and dimensions, with elaborate blue prints, as to-day. I often asked the manager of the works for some instructions in draughting, and was as often evasively put off. In conversation with our past-president, J. F. Holloway, about this same question, he made the remark: "Perhaps he did not know much more about draughting than you did." In a later conversation, relative to his address, "The Chalk Age of Mechanical Engineering," delivered at Sibley College, Cornell University, I asked Mr. Holloway the question, How it was that he had so minutely described my early experiences of mechanical engineering? He replied something like this: "All old-timers went through about the same channel." In looking back to the past, "the old," and viewing the crude tools and appliances used in that early day, it is wonderful the efficiency which they developed then; the development of the electric generator and motor is marvellous

Digitized by Google

from a small battery toy to the present ones, requiring hundreds of horse-power for lighting and power transmission, and swiftly driving the electric car. Little did Davenport and Professor Page realize the embryo they planted in their battery motor car, or Professor Pacinotti, in his self-exciting dynamo, the possibilities of the vast generators of to-day.

Mr. Olin Scott, in his well-timed remarks relative to our Society, bearing on the subject of the "millwright," or, as he would be termed to-day, "the erecting or installing engineer," makes a good point. The sphere of his usefulness is as great, if not greater, to-day, as the units of power transmission have so largely increased, requiring more special knowledge of mechanical engineering than at any time in the past; and I can call to mind many failures for the want of the trained "millwright" engineer. The young man of to-day who has the proper development, force of character, and ability, has a large field of useful opportunities before him.

Mr. A. F. Nagle.—I cannot claim the honor of belonging to a generation of men who did the pioneer work in our machine-shops in the early forties, but I can speak of '61.

I rarely witness the operation of the fine tools now used in our machine-shops without being reminded of the tools which we had at the beginning of the war. Large planers were scarcely in use, and, instead, there would be improvised a set of guides, or slides, bolted to the large castings, and a cross-head, holding a cutter-head, would be run back and forth by the bed-plate of a planer.

I remember well a large double-crank marine-engine shaft, belonging to the U. S. S. *Oneida*, being made in the old Fulton Iron Works, New York city. After being turned as nearly true as the tools permitted, it was subjected to tests with straight-edges and calipers, and the crank-pins would be chipped and filed to greater accuracy than the lathe made possible. A sort of sizer would be run over the cranks while the shaft revolved in its bearings.

When thus completed, it was really a very handsome crank-pin. But compare that slow and laborious process with the one now pursued, and then ask which is really the greater wonder, the old or the new.

Mr. George I. Rockwood.—The reference made by Mr. Scott to the lack of attention paid by trained engineers hitherto to the de-

Digitized by Google

velopment of the water-wheel, suggests to my mind the singular, though common, way of originating and improving turbines as now built by several prominent makers. I believe the process is something like this: an experienced millwright is given the opportunity of making patterns for the buckets, etc., of a wheel, which is then built and shipped to a testing flume, where its efficiency, whatever it proves to be, is determined. Little alterations then suggest themselves to the pattern-maker's mind, and he proceeds to repeat the process, perhaps several times, until finally the 80 per cent. mark is passed, when he pronounces the wheel as good as can be made, and it continues to be built from those patterns. All through it he is indifferent to fine-spun theory, being guided apparently by instinct alone.

It has not been shown, either by the "practical" man or the theorist, that 81 or 82 per cent. is the highest efficiency of which the turbine wheel is capable, and nothing but careful observation of the reasons for the discrepancy between the theory of reaction wheels and present practice can better that efficiency.

It may be of interest to the members to learn that, through the liberality of Mr. Stephen Salisbury, of Worcester, Mass., the Worcester Polytechnic Institute has lately been granted a water privilege of 80 horse-power, at which is now located a very well-appointed turbine-wheel testing plant, splendidly adapted to the study of the efficiency of water-wheels. For measuring the water delivered to the wheel, there are provided a Union water meter, a very conveniently arranged and carefully made weir, and the large Venturi water meter which was in use at the Columbian Exhibition at Chicago. Thus the effect of an alteration in the design of a turbine may be studied analytically, and the theoretical effect compared with that actually observed by precise measurement.

Prof. F. R. Hutton.—As a supplement to Mr. Allison's paper, I call attention to the accompanying cut (Fig. 216). It is taken from a circular issued in 1866, by the firm of Allison & Bannan, and is intended to illustrate a form of tool made necessary by increasing size and weight of work in proportion to the available tools. It will be seen that the intention was to set up a sort of portable boring bar on a massive gear, or such piece of work, which, when the light frame of the tool proper was bolted to it, then became the bed-plate of the tool.

I can remember very distinctly that the principle embodied in

Digitized by Google

this boring machine of Mr. Allison's pervaded much of the practice in the Cuyahoga Works, of which Mr. Holloway was president and superintendent for so many successful years. I hope he will be persuaded to tell us more about his methods there.

Mr. J. F. Holloway.—I have been very much pleased to listen to the paper of Mr. Allison, and I am quite sure that there are very few engineers here who are competent to discuss it, by reason

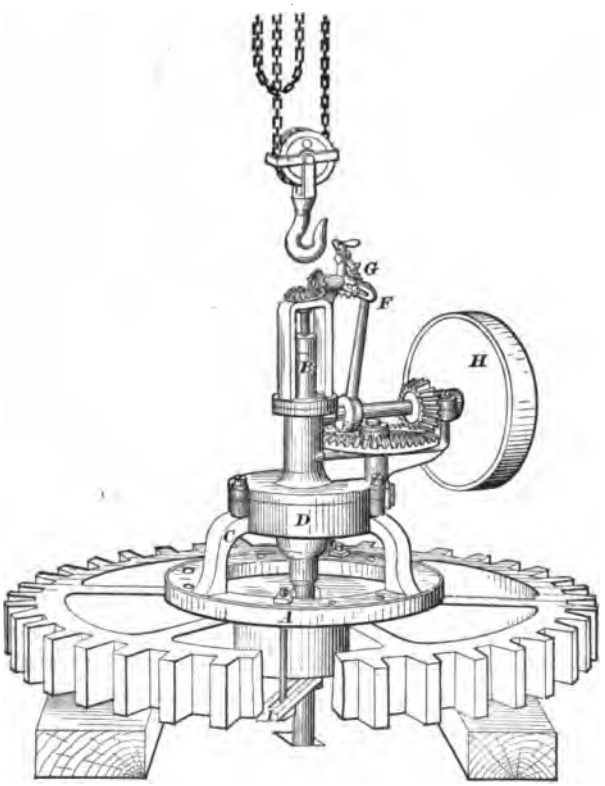

FIG. 216.

of any practice which they have had in such shops as he has described. My friend Washington Jones, and some others, I dare say, have chipped and filed the slides of steam engines, and perhaps have done other work of that class. The work which was done by the old-time machinist is now the work of a past age, but it is well for the young men of the present to have such papers presented to them, in order that they may know what work was

Digitized by Google

once accomplished by hand-craft, and not by well-built and nicely designed tools. The workmanship of the past was mainly hand-craft, the workmanship of the present is the production of machine tools. As the traveller pauses amid the grand ruins of old Egypt, he sees on all sides great masses of stone which have been elevated to a high position. If he is a thoughtful man he wonders how they were placed there, and it is indeed a matter of interest and study to the engineers of the present, to know how such work was accomplished. It should be equally a matter of interest and study to the younger engineers of the present, to know how the massive steam engines for factories, rolling mills, mine pumps, and enginery of various kinds were constructed and built in the days when there were no engine lathes, no planers, no upright drill-presses, and none of the many modern appliances which have made the construction of such work now so easy. The generation of engineers who accomplished the work Mr. Allison so well described is now rapidly passing away; they had no engineering society to which they could present papers, and in whose transactions could be published and illustrated their trials, their troubles, and their difficulties, which others, seeing, might avoid. They had no means, beyond the little circle which each one had about him, of communicating to others the different problems of their day and of their generation. When they shall have passed away, there will be left no record of what they went through, and there will have been no American Society of Mechanical Engineers, whose Transactions contain histories of their troubles and of their success, as do the volumes of this Society of the engineers of the present. Great credit is due, and should be given, to the men who thus quietly and unostentatiously worked hard and long to produce the results which they accomplished, with no technical training, with no modern shop appliances, but simply by hand-craft, and a lot of good horse sense.

Mr. Fawcett refers to the early construction of what we knew in the West as the "Muley Sawmill." I simply wish to make a slight correction. The original construction of the "Muley Sawmill," with its high-speed engine, was, so far as I know, done by Mr. Ethan Rogers, of Cleveland, Ohio, a man who was eminently an original, successful engineer and skilful mechanic, although not a technical trained one. Mr. Joel Sharp, our highly honored member, worked in the old Cuyahoga Works when Mr. Ethan Rogers was there, and I dare say he saw, on the drawing boards

Digitized by Google

of the old Cuyahoga Works, the rude drawings of the quick-stroke engine which Mr. Rogers had made, before they were planed out, to make room for something else, as was the practice then.

Mr. William Kent.—I would like to ask Mr. Holloway if he has any knowledge of the high-speed engine, between the time of Mr. Oliver Evans and that of Mr. Ethan Rogers. There seems to be a gap. He might tell us whether there were any high-speed engines built during that time.

Mr. Holloway.—I only know that when the method was proposed of attaching a saw blade direct to the end of a shaft which had a short-stroke steam engine connected on it, it was looked upon as a wonderful transition in sawmill engineering. Previously there had been only the long-stroke engine, that I know of, for this purpose. Mr. Rogers used a steam cylinder about 8 inches bore and 12 inches stroke, and, what was then new also, he used large, long steam and exhaust ports, and he ran it some 300 revolutions a minute. I dare say, if time was available, I could tell stories of some of the old-time sawmill men and the old-time millwright, and of what they said when they first saw one of these engines going at that unheard-of speed. I have no knowledge of the construction of similar high-speed engines up to the time they were built by Mr. Rogers at the Cuyahoga Works, at Cleveland.

Mr. Washington Jones.—I can add but little to what Mr. Allison has stated in his paper, as my experience is similar to his, and would be only corroborative. Mr. Allison commenced his apprenticeship at about the time I was finishing mine. I had the advantage of serving my time in a city shop (Southwark Foundry), although it was not much better equipped with tools than the ones he describes, in Pottsville; but there was a greater variety of work, as paddle-wheel steamboats, propeller engines and hulls, steam hammers, horizontal engines, blowing engines, pumping engines, hydrostatic presses, Fourneyron turbines, etc.—a good school for the apprentices. I remember when the bed-plates were cast for the steamer *Mississippi*, one of the first made for the United States Government. The engines were of the side-lever type, designed by our late fellow-member, Charles W. Copeland. These bed-plates were about 29 feet long by 9 feet wide, and weighed perhaps 15 or 16 tons. When the mould was completed, I, being the youngest cub in a drove of thirty, was sent to deliver invitations to prominent people in Philadelphia, to come and witness the pouring of the

Digitized by Google

metal of the first bed-plate. It was a gala day, as everything went successfully. From the experience had upon the first bed-plate, the second soon followed, when both were placed side by side in the erecting shop, and two sets of workmen, one composed of New York men, the other of Philadelphians, were each given a plate to finish, and then the race began. All the parts which needed facing, as seats for steam cylinders (of 75 inches bore), condensers, air-pumps, beam shaft pedestals and columns, were chipped (now almost a lost art) and filed, and as I was present when the engines were tested under steam, I can say *filed true;* as there were no steam or air leaks, and as gum joint-rings were then unknown, the excellence of the workmanship was proved. That will give the members some idea of the difficulties experienced in those early days.

The next contract of magnitude undertaken by the Southwark foundry was the engines for the *Princeton*, the first American steamer designed to use a propeller, and built, against much opposition, by the influence of Commodore R. F. Stockton. These engines required very accurate workmanship, and more and better tools became a necessity, and were built, so making the establishment, at that time, probably the best equipped in the State of Pennsylvania. One of the new tools was a large boring mill, on which cylinders were bored out whilst standing vertically, instead of lying on their sides, as in a lathe. This was, I believe, the first one used in the State, but certainly in Philadelphia. The engines of the *Princeton* were built from the designs of Captain John Ericsson, and the original drawings were all made by his own hands, and were the neatest and most accurately drawn to scale (only principal dimensions being figured), of any I ever saw. It was my pleasing duty to dissect and enlarge the details for the use of the workmen in the shops. In the case of stub ends for connecting-rods, all of them which would go into a vice were finished there. After turning the neck to size, squaring the end, and marking circles for width and thickness of the stub, the rest of the work was done with hammer, cold-chisel, drill, and file. In those days stubs were generally fitted up by apprentices, and it was considered by them a test of skill to fit in the brass boxes without marring the corners of the straps, so that when put together and draw-filed, the joint between stub and strap could not be seen. I would be glad to continue my remarks upon Mr. Allison's paper, but as they would scarcely rise

Digitized by Google

above the level of personal experience, are not likely to interest the members, and I have said enough to show

> "The troubles that environ
> All those who meddle with cold iron."

The President.—These sketches of Mr. Allison bring to mind some reminiscences. I can remember seeing some very large cylinders, for mine pumping engines, bored out with the very same tools sometimes used for boring a cylinder 60 or 70 inches in diameter.

Mr. Allison, we would be very glad to hear from you, in closing.

*Mr. Robert Allison.**—In those old days, Mr. Davis well knows that we had pumps driven by pump-rods and gearing. The pump was put in the bottom of a mine, and a wooden rod reached down to the bottom of the mine to operate the pump, and that was connected to the wheel which was driven by the engine, and those wheels had to be keyed on the shaft, as I said in my paper, by six or eight keys. It was very laborious work to do it, and very frequently the wheels would get out of true, and, as mechanical engineers, we all understand what that would mean—every time it would go around there would be a "whir" when it came down to the full side, and, in order to avoid everything of that kind, I got up the machine of Fig. 216, and used it quite extensively, and sold quite a number to other parties, for the same purpose. In connection with pump wheels, in hoisting from the mines we had to have large drums, from 6 to 12 feet in diameter. They were generally built up with spiders and wooden laggings, put on the drum to wind the ropes on. In those days we used chains instead of ropes, as we had no wire ropes used for this purpose at that time. The drum shafts were made of cast iron, either hexagon or octagon in shape, and about 16 feet long, and the spiders were keyed on, and lags were bolted to the spiders; with this machine we could bore the spiders, and could fit them to a turned shaft, with one or two keys, as necessity required. I found it a very useful machine, and it helped me out of a good many scrapes by having it.

In my experience, in this kind of work there are a good many other things that come into play, that were not anticipated. I speak in my paper of the Danville Rolling Mills. They were the first mills that rolled T-rails in the United States. I worked on that mill

* Author's closure, under the Rules.

Digitized by Google

from the day the first hammer was struck for it until the mill was finished, and I worked many a night, and many a Sunday, afterwards, in fixing up break-downs which took place after the mill was started. As Mr. Holloway says, there were no mechanical schools; we had no opportunity of learning to give the proper proportions to shafts, wheels, and things of that kind, and the mill was put up rather haphazard. The consequence was, that just as soon as the mill was started the trouble commenced. I remember, in one week, working fifteen days—working nights and Sundays, etc.—and it was that way all the time I was there. I left there about a year after the mill was started, and they had not gotten over their troubles then—break-downs and other troubles which they met with. But the business has gone on, and we all know that they can make T-rails now, and make them right; but, at the start, it was a pretty hard matter to do anything with them.

In closing the discussion, I desire to thank the members of the Society for their interest in the paper. The discussion has revived in my mind many incidents of my early career as a machinist, some of them very pleasant and others quite the reverse. Mr. Jones speaks of the mode of fitting stub ends for connecting-rods. I remember fitting up a large rod made with split stubs, connected with straps about five inches wide by one and a quarter inches thick, filled in with wood. I had just finished the job when my master, Mr. Haywood, brought two gentlemen in; he called their attention to the workmanship, and asked them if they could see the joints. They declared the stubs were solid pieces, and he had some difficulty in convincing them that there were three joints in each stub. Now comes the sequel: Next day Mr. Haywood walked into the shop and handed me a crisp ten-dollar bill. Of course, I was elated, and stimulated to increased diligence and care in my work. The life of an apprentice in those days was not all sunshine; we were required to do many things which seemed to us an imposition, such as running a bolt-cutting machine, punching boiler plate by hand, driving a horse in the shop yard, etc. But it taught us obedience to our masters, and was a great benefit to us in our after career as workmen, foremen, and, some of us, proprietors. In those days an apprentice was expected to learn the use of all the tools in the shop, as well as to do all kinds of hand work, and, if apt in learning, would, at the end of his apprenticeship, be able to fit up all parts of an engine, set it up on the foundations, set the valves, and start up in good shape.

Digitized by Google

In the olden time, shops made all the bolts, nuts, set-screws, oil-cups, in fact, everything required in the construction of machinery, and also all the small tools required, such as taps and dies, reamers, etc., while now all those things are specialties, and can be bought from the makers and dealers at prices which preclude the possibility of machine-shops making them, and we get a much better article than we could make. But I must close, as I find the subject opens up such a field for thought and discussion that we are lost in wonder at progress made in the designing and construction of machinery during the last half-century.

Digitized by Google

DCXLIII.*

A METHOD OF PROPORTIONING CYLINDERS FOR COMPOUND ENGINES.

BY E. C. KNAPP, BOUND BROOK, N. J.
(Junior Member of the Society.)

In presenting the following paper the writer will endeavor to offer a few simple and perhaps aged formulæ, expressing the relation of pressures and cylinder ratios for compound engines, to show their adaptability to a wide range of work, and to compare the same with some recent practice.

In determining the proper cylinder ratio for a compound engine it is desirable: *First.* That the load should be equally divided between the two cylinders, as a matter of convenience in proportioning parts correctly, and at the same time symmetrically. *Second.* This equal division of load should extend throughout the entire range of load. *Third.* The range of expansion and corresponding range of temperature in each cylinder should be an economical one. *Fourth.* The receiver space should be of sufficient capacity not to interfere materially with the form of the cards from the two cylinders, although that point will not be discussed at present.

A compound engine for stationary work is usually called upon to carry a varying load, and often one whose variations are rapid and extreme. Hence, for this class of work, the division of load becomes of greatest importance. A system to meet these requirements more or less completely will be described and afterward discussed.

The cut-off is to be automatically varied and kept at the same point in both cylinders. The clearance space of both cylinders is to be so filled by compression that if the compression line were extended to the steam line the amount of clearance thus shown remaining to be filled at admission shall be the same percentage of the displacement in both cylinders. This is best

*Presented at the Detroit meeting (June, 1895) of the American Society of Mechanical Engineers, and forming part of Volume XVI. of the *Transactions*.

Digitized by Google

accomplished by having the clearance the same percentage in both cylinders, and compression carried to the same percentage of initial pressure in both.

The receiver space is assumed large enough not to materially affect the cards, and the steam in its expansion is assumed to follow the law $P V = \text{Constant}$.

An attempt was first made to study the problem by means of

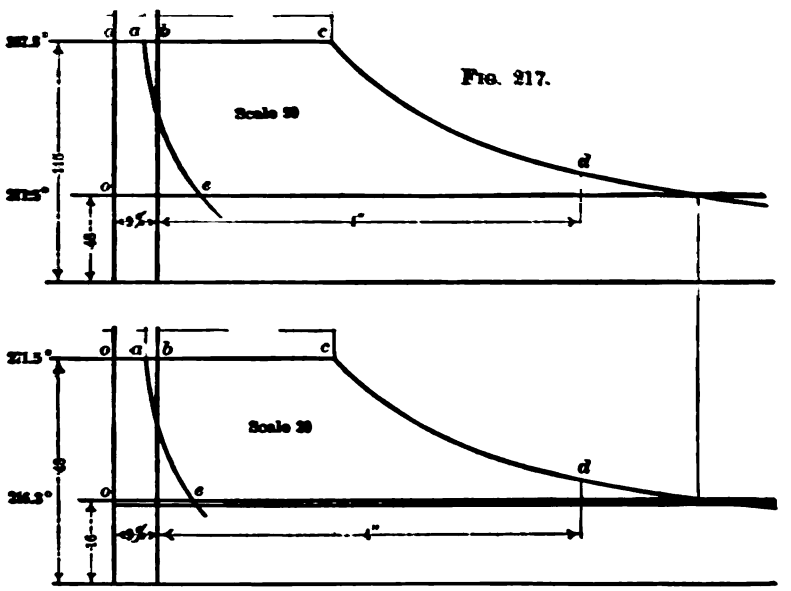

Fig. 218.

diagrams, but it was soon found that when the load was equalized the relations of pressure and cylinder ratio could be expressed as follows:

Let P_I = Initial pressure in high-pressure cylinder.
Let P_R = Receiver pressure.
Let P_b = Back pressure in low-pressure cylinder.
Let R = Cylinder ratio.

} All absolute.

Then $$R = \sqrt{\frac{P_I}{P_b}}, \quad P_R = \frac{P_I}{R}, \quad P_b = \frac{P_R}{R} = \frac{P_I}{R^2}.$$

Now let the pair of cards shown herewith in Figs. 217 and 218 be drawn with P_I, P_R, and P_b, as indicated in the formulæ. Let the clearance of the two cylinders be the same percentage, and

Digitized by Google

compression begin at the same point of the stroke, thus compressing to the same percentage of initial pressure in each, and leaving the same percentage to be filled at admission. Then, if the cut-off is the same in both cylinders, the work done on each piston is the same, regardless of where the cut-off is, for in this case the pressure represented by any ordinate of one card is to the pressure represented by the corresponding ordinate of the other inversely as the cylinder ratio, and the effective force on each piston is the same.*

Thus we see that the drop, while less in the low-pressure cylinder, is equivalent to that of the high, and becomes zero at the same point of cut-off. By choosing the proper size of cylinders this drop can be made zero for any given load, but, of course, this can be done for one load only, and earlier than this load we have looping. And now the question arises, Is the drop detrimental to economy? To say that drop between the two cylinders is detrimental to economy seems to be contradictory to the theory of the throttling calorimeter, in which the steam is allowed to expand without resistance, thus retaining all its heat, which, in the form of superheat, is afterwards measured. When this expansion takes place into the receiver of an engine, the superheat thus caused is in its most available form for transformation into work in the following cylinder.

The drop in the low-pressure cylinder seems to represent a waste similar to that in a non-condensing engine where expansion is not carried to atmospheric pressure, and the same arguments which justify one justify the other, viz.: first cost of engine internal friction—and Mr. Ball would very properly add cylin-

* Proof.—Between b and e the effective pressure shown by any ordinate x of the high-pressure card $= P_I - P_I \times \frac{oa}{ox}$; and the same for the corresponding ordinate of the low-pressure card $= P_R - P_R \times \frac{oa}{ox} = \frac{1}{R}\left(P_I - P_R \times \frac{oa}{ox}\right)$.

Between e and c the high-pressure ordinate $= P_I - P_R$; and the corresponding low $= P_R - P_b = \frac{1}{R}(P_I - P_R)$.

Between c and d any high-pressure ordinate x represents an effective pressure $= P_I \times \frac{oc}{ox} - P_R$; and the corresponding ordinate of the low represents

$$P_R \times \frac{oc}{ox} - P_b = \quad . \quad . \quad . \quad \frac{1}{R}\left(P_I \times \frac{oc}{ox} - P_R\right).$$

Digitized by Google

der condensation, upon which ground alone he is prepared to defend the drop in both cylinders

Returning again to the diagrams, we see that the product of the pressure and volume at cut-off in the high-pressure cylinder $= P_I \times oc$, and in the low $P_R \times oc \times R = P_I \times oc$, so that the steam demanded by the low-pressure cylinder and that delivered by the high are equal, as required.

From the formulæ we have, for non-condensing engines: P_b assumed 16 pounds.

Initial pressure.

Gauge.	80	100	125	150	200
P_I	95	115	140	165	215

Cylinder ratio.

R	2.45	2.68	3.02	3.17	3.70
P_R	39	43	47	52	58
P_b	16	16	16	16	16

Range of temperature.

H. P.	58.3°	66.3°	75.8°	82.5°	91.4°
L. P.	49.3°	55.2°	60.7°	67.0°	74.0°

And for condensing engines we have: P_b assumed $= 3\frac{1}{2}$ pounds.

Initial pressure.

Gauge.	80	100	125	150	175	200
P_I	95	115	140	165	190	215
R	5.21	5.72	6.32	6.86	7.36	7.74
P_R	18.25	20	22	24	25.8	28
P_b	3.5	3.5	3.5	3.5	3.5	3.5

Range of temperature.

H. P.	101°	110°	120°	128°	135°	141°
L. P.	76°	80.6°	85.7°	90.4°	95°	99°

Mr. James Tribe, in a paper published in the *American Machinist* of September 10, 1891, by a somewhat similar line of reasoning arrives at cylinder ratios for non-condensing compounds which correspond very closely with those given above; but when he comes to condensing engines he makes an allowance for loss in expansion which allows his cylinder ratio in no case to rise above 4.25.

Digitized by Google

It seems quite possible that the cylinder ratio of Mr. Rockwood's remarkable engine, with a ratio of 7 to 1, a test of which was reported at the last meeting, was computed from substantially the same formula, so closely does it correspond.

In this case $P_I = 159 + 15 = 174$ pounds. P_I was probably intended for 175 pounds

Then, taking $P_b = 3\frac{1}{2}$ pounds, $R = \sqrt{\frac{175}{3.5}} = 7.06$.

Mr. Rockwood is also very successful in showing that the drop between the two cylinders is not a very serious matter.

The writer has been somewhat in doubt whether, with the extreme ranges of expansion used by Mr. Rockwood, the steam could be relied upon to follow the law $PV =$ Constant, and has consequently hesitated somewhat to recommend a cylinder ratio higher than five. The report of the performance of Mr. Rockwood's engine was anxiously awaited on this account, and although the information on this point is not so exact as might be desired, it seems to establish the fact that the law is followed closely enough to justify the proportions.

From the formula it is evident that a slight change in P_b, when P_b is small, as for condensing engines, requires a marked change in R to exactly equalize the load for a given initial pressure P_I. But on the other hand a change of one pound in the back pressure, P_b, will make the load uneven only by the amount due to one pound M. E. P. on the low-pressure piston. For this reason a given cylinder ratio can be made to cover a greater range of values of P_I with the condensing than with the non-condensing engine.

And now, regarding the range of temperature in the two cylinders. The writer believes with Mr. Rockwood that the range should not be equal for the greatest economy, but should be inversely as the surfaces exposed, or inversely as the diameters, or inversely as the square root of the cylinder ratio. It will be observed from the table that while the range is in every case lower in the low-pressure cylinder, as it should be, it is higher somewhat than this rule would indicate.

On the whole we have the following results: Correct steam distribution, with a relation of cut-off easily obtained. Evenly divided load throughout the entire range. Proportions of clearance and compression easily obtained. Good division of range

Digitized by Google

of temperature, and drops in the two cylinders which can be made to correspond with any requirement for economy. And here we will leave the subject to the consideration of the critics of the Society who may find it of interest.

DISCUSSION.

Mr. James B. Stanwood.—I would like to call attention to the title of this paper, which I think might be made more narrow than it is. It says: "A method of proportioning the cylinders of compound engines." I would add: "To secure an equal division of work and equal pressures in both cylinders." This method relates only to one phase of the subject, and cannot be adapted without modification to usual conditions of practice.

Mr. George I. Rockwood.—I agree with the last speaker in thinking that the title of this paper is a little too broad for the treatment of the subject. I acknowledge that many writers on cylinder ratios of compound engines have rested on the dictum which forms the basis of the author's computations in the paper—that the best ratio is that which gives an equal division of the total work to each cylinder. But whatever experience I have had with high pressures—140 to 160 pounds—leads me to conclude that it is more economical to do $\frac{5}{8}$ or $\frac{2}{3}$ of the total work in the high-pressure cylinder, since the amount of cylinder condensation in each cylinder is then more likely to be equal. Of course, the amount of work done in each cylinder has no direct connection with the amount of "cylinder condensation" in each cylinder, and a formula based upon an equality of work is but a rule of thumb, which may be either right or wrong. I think the suggestion is wise to control the point of cut-off in the second cylinder by the governor, in places where the load is variable, both on the score of economy and closer regulation.

The question of what the best cylinder ratios for a wide range of initial pressures may be is a pressing one, and I am glad to be able to state that it is to be carefully investigated at the Worcester Polytechnic Institute, where they are now putting into the mechanical laboratory a triple-expansion engine, unique amongst experimental engines in at least one important particular, that each engine may be run separately and at variable speeds as well as at variable steam pressures. Thus, any two of these engines

Digitized by Google

can be operated together as a compound, and by speeding up the low-pressure side relatively to the speed of the high-pressure side, any cylinder ratio desired may be tested.

I hope to see the question of the relative importance of the intermediate cylinder of a triple-expansion engine settled, for steam pressures less than 200 pounds.

Mr. William Kent.—I wish to call the attention of the members who are interested in this question of steam-engine economy to the sentence on the first page of this paper: "A compound engine for stationary work is usually called upon to carry a varying load." Now, the aim of nearly all the reports of tests that we have of steam-engines, and of nearly all the investigations we have had yet of the steam consumption in an engine, determine only the consumption when it is running at that point of cut-off which is supposed to give maximum economy, and the question asked concerning an engine usually is, How low can we get its steam consumption under a single set of conditions? I think this whole question should be broadened out so as to have a series of tests in which we will find what conditions or what design will give us the maximum economy for a great range of load; that is, if we have two engines to test against each other, each of 500 horse-power, each of the engines may, say, give a water consumption of only 12 pounds, at 500 horse-power, but one tested all the way from 300 to 600 horse-power may give a higher economy throughout the whole range than the other, and the one which gives the higher average economy for the whole range is the better. This question should also be taken up in regard to the steam boiler. I have never heard of a competitive test made of steam boilers to determine which boiler was the best throughout a given range.

Mr. Stanwood.—I would like to indorse Mr. Kent's remarks in this particular. It seems to me that the problem for the steam engineer, especially for our western country, is to design a non-condensing engine which will produce high economy under both high and low loads. Our industries usually develop extremely high and extremely low loads, and it is very seldom that we find a place where there is a constant load. The average of a high and light load is not an equivalent of a constant load. The conditions accompanying the development and distribution of electrical engineering tends to make constant loads more rare and extreme variations in load more common. The engine which will give the best results at a maximum load, and a good result at

Digitized by Google

light load, will be the best engine commercially for the future. The same holds true for boilers.

Mr. Jesse M. Smith.—I have been pleased to see that Mr. Knapp has put into form the subject to which I called the attention of the Society at the New York meeting in 1892—that is to say, proportioning the engine so that the work done in the two cylinders should be the same, and should remain the same throughout the entire range of the power of the engine. This is accomplished very readily by having the valve gear of both cylinders controlled by the governor, to which I called attention at the New York meeting in 1892, and which was the condition of the engine on which I reported a test at the Montreal meeting. This latter engine was driving an electric railway in which there were only three cars, and in which the load varied, as you will remember, from about 100 horse-power down to 5 or 10 horse-power in less than five seconds. The results there given were commercial results—everyday work—and the test was carried on for eighteen consecutive hours, with readings taken every five minutes in the cylinders, every ten seconds on the electrical instruments. This paper presented to-day on "Tests of a Combined Electric Light and Electric Railway Station" is also made under the same conditions of variable load and a load which varies very rapidly, and, you might say, almost instantaneously. These results cover somewhat the point that Mr. Kent raised. The economies are those of engines under actual conditions of an electric station, in this paper and the one that I presented at the Montreal meeting; whereas the very high efficiencies which have been found in pumping engines, and in some cotton-mill engines, are based upon a load which is practically constant.

Mr. Rockwood.—If I may be allowed to speak once more, the discussion is drifting now to the matter of variable load. I want to connect that with the subject proper of this paper, and refer to the marked advantage of using steam at a high pressure in a compound engine having the extreme ratio of cylinder volumes of which I have been an advocate, for places *where the load is variable*, as I understand it is currently believed that under such circumstances a relatively large high-pressure cylinder will give the best results. I have tested a triple-expansion engine run without its intermediate cylinder and with a constant receiver pressure, and I have found that a variation of 50 per cent. in the load did not affect the economy of its operation appreciably.

Digitized by Google

The ordinary compound, as Professor Carpenter has shown, is more economical with a variable load than is the simple engine, and the type of compound which I refer to is more economical even than the ordinary kind.

Professor Hutton.—If I understand the statement at the top of page 763, where the author says, "This is best accomplished by having the clearance the same percentage in both cylinders," I do not think that is true. I would like to have the author explain it, and justify it if he thinks it is true.

Mr. Rockwood.—I think that the author has to make that premise in order that the formulæ can be mathematically precise.

The President.—I think that is very misleading. It seems to me that that is a question that ought to be discussed a little before it is put into the Proceedings. In this shape it is liable to be very misleading. I would like to have some of our members who have experimented in these matters give an opinion on that subject. We all know that the clearance in the high-pressure cylinder must be very much larger than the low-pressure to make the compressions anywhere equal; or else you have to cut out the inside lap of the valve which is equivalent, to an injurious extent.

Mr. Rockwood.—The clearance of the low-pressure cylinder is always about 60 per cent. greater than that of the high-pressure cylinder, if the engine is properly designed.

*Mr. Knapp.**—I am glad to see that the importance of proper steam distribution and division of load, throughout the entire range of load, has been brought so prominently to the front in this discussion. With any load, not too light, valves can be adjusted to give fairly satisfactory results with almost any cylinder ratio, but as soon as the load changes, a new adjustment is required. Applying the automatic cut-off to both cylinders, in itself, only partly overcomes the difficulty. The points of cut-off in the two cylinders, the pressures which are the limits, the proportion of load taken by each cylinder, and the cylinder ratio must bear certain relations to one another for the best results, which may form the subject of a more extended paper. The system here described forms a special case and, to the author's mind, the simplest, most effective, and, therefore, the most desirable one. It was selected, after quite a thorough consideration of mechanical details, as the simplest arrangement and at the same time the one which most fully meets the requirements of "the usual conditions of practice."

* Author's closure, under the Rules.

Digitized by Google

The point of division of load which gives absolutely the highest thermodynamic efficiency is not yet definitely determined. An equal division of load possesses many advantages in proportioning parts and balancing the engine, and, being also very near the most economical point, was, therefore, chosen. It is also doubtful if any other proportion than an equal division could be maintained throughout the entire range of load.

Given two cylinders operating reciprocating parts of the same weight, at the same speed and stroke, the requirements to stop the parts are identical. Then, if the actuating pressures upon the piston have been inversely as the areas, thus producing identical effects upon the piston-rods for the entire cycle, with the exception of the period of compression, it would be natural to conclude that the rule of inverse pressures, carried through compression also, would give the best results. For, proportioning the pressure to correspond with the weight and speed of reciprocating parts for one cylinder, and taking an equal percentage of clearance and the same exhaust closure for both, we have the requirements fulfilled with mathematical exactness for the following desirable features for both cylinders:

First.—Compression correct to check the reciprocating parts.

Second.—Exact division of load.

Third.—Constant receiver pressure, and, therefore, constant range of temperature in each cylinder, because the steam required for the clearance space of the high-pressure cylinder is just the amount required for the same purpose in the low, while the other requirements for constant receiver pressure are fulfilled by the cut-offs. These are three results which it would be difficult to combine in any other way. It is also to be noted that this is the steam distribution most easily obtained with any form of valve gear.

It is safe to say that any reasonable variation in clearance would not, in practice, produce a serious change, especially if the compression were made to follow the law for such cases indicated in the foregoing paper; although the laws governing the load in this case would be more difficult to express with the same precision. As far as economy alone is concerned, the most economical clearance for both cylinders is probably zero, which would be unsatisfactory if it were not impossible.

Mr. Smith recalls the report of a test which I remember reading with great interest. Here is an engine giving the same

Digitized by Google

results which should be expected from the system described. The mechanical details are evidently, within reasonable limits, those advocated in the preceding paper. Now, if the pressures selected as limits are those for which the cylinder ratio is adapted, the results are those which, in the opinion of the author, ought to be expected. And here I would say that, if the pressures are not those for which the cylinder ratio is best adapted, the results should still be more satisfactory than with the fixed cut-off on the low-pressure cylinder.

The pressure limits were 117.5 and 0 gauge.

The abs. initial pressure (P_I) is, therefore, $117.5 + 15 = 132.5$

The abs. back pressure (P_b) equals ..... 15.

The cylinder ratio (R) should equal $\sqrt{\frac{132.5}{15}}$ 2.97

And the receiver pressure (abs.) should equal $\frac{132.5}{2.97} = 44.6$

or, the receiver pressure gauge should equal $44.6 - 15 = 29.6$

The size of engine was 8 and 13.75×12, giving a cylinder ratio of $\frac{(13.75)^2}{(8)^2} =$ 2.95

and receiver pressures from the cards varying from 28 to 31 pounds gauge, giving a mean of $(28 + 31) \div 2 = 29.5$ while the load remained equally divided throughout the entire range.

Whether this engine was designed for an initial pressure of 117.5 pounds gauge I do not know, but it is evident that, in some way, the pressure for which it was best adapted had been ascertained, and the figures show how easily the system can be applied in practice, with mathematical exactness.

Digitized by Google

DCXLIV.*

THE DOWN-DRAUGHT FURNACE FOR STEAM BOILERS.

BY WILLIAM H. BRYAN, ST. LOUIS, MO.
(Member of the Society.)

PROBABLY no mechanical device has done as much toward the practical solution of the smoke problem in St. Louis as the down-draught furnace. Until this apparatus was developed there was a certain character of steam plants—or, rather, of steam service—to which it seemed that none of the existing forms of smoke-abating furnaces could be satisfactorily applied. In these plants—fortunately few in number—the demand for steam was such as to make it necessary at times to crowd the boilers far beyond their rated capacity. Or else the work was subject to frequent and extreme fluctuations, often greatly exceeding the rated capacity of the boilers. It may be said, of course, that this is abuse, rather than proper use, of a boiler plant, but, nevertheless, these conditions exist, and it is sometimes impossible either to modify the conditions or increase the boiler capacity.

The fact that there seemed no practicable or reasonable remedy for these cases retarded the growth of the smoke abatement movement in St. Louis for many years. It was thought unwise to pass and attempt to enforce smoke-abatement ordinances when it seemed impossible for some of the plants to stop the smoke, under reasonable conditions. The demonstration of the fact that the down-draught furnace made a good smoke record possible, even with overworked boilers doing variable work, and with a marked economy in fuel, may be said to have marked an epoch in smoke abatement. Our experience in St. Louis leads us to believe that smoke from boiler furnaces can now be abated by practical means, without hardship, no matter what the type of boiler, the character of the work required of the plant, or the kind of fuel used.

* Presented at the Detroit meeting (June, 1895) of the American Society of Mechanical Engineers, and forming part of Volume XVI. of the *Transactions*.

Digitized by Google

I speak thus highly of the down-draught form of furnace with no intention of denying the merits—for they are many—of other smoke-abating devices. Many of these do excellent work under most of the conditions occurring in practice. In my opinion, however, no single furnace now on the market can be adapted to all the conditions met with in everyday boiler service. Each type has a place, a field of usefulness, within which limits its success is sure. Unfortunately, however, the average furnace man seems unable to realize this truth, but offers his device as a remedy for all sorts of cases and conditions. It is not surprising, therefore, that he sometimes meets with failure.

Where the work required of a boiler plant does not greatly exceed its rated capacity, and is reasonably uniform, there are many good smoke-abating furnaces which may be used, some of which will make an appreciable saving in fuel. If our boiler plants were properly designed and managed, and if we did not have sometimes to overwork them, and to subject them to widely varying loads, the smoke-abatement problem would be greatly simplified. The fact, however, that even such discouraging conditions as these can now be intelligently remedied, has led to the preparation of this paper.

Fortunately for the steam-using public, several different forms of down-draught furnaces are offered for sale, by various builders, and under different patents. I have had no opportunity of looking up the number and value of these patents, but it would seem that they refer to important details of construction and arrangement, rather than to general or essential principles. It is not necessary to consider here whether or not the manufacturers are justified in charging royalties. Their experience in the design and adaptation of the furnace to varying conditions—and the further fact that, as a rule, they will guarantee results—would certainly appear to entitle them to a fair margin of profit, at least.

Although the principles are old, I have been unable to find any record of this type of furnace coming into regular use previous to 1888. It seems that the cost of the apparatus, the necessity for water grates, and their frequent burning out, due to defective construction and bad feed-water, prevented its general adoption.

The form of down-draught furnace which has come into most general use, and which may justly be said to have contributed

Digitized by Google

more than any other to the present state of the art, is that invented by Mr. M. C. Hawley, of St. Louis, and which bears his name. Mr. Hawley's experiments began as far back as 1873, and met with varying degrees of success. He was able to show an economy of fuel, and, with proper handling, an almost total abatement of the smoke, even with the low-grade soft coals common in the Mississippi valley. In 1882 Mr. Hawley interested Capt. C. W. Rogers, then General Manager of the St. Louis and San Francisco Railway, who, after consultation with his master mechanic, decided to build an experimental furnace in the fire-box of a switch engine. The result was so satisfactory that the furnace was soon applied to another locomotive boiler in stationary service. It was then applied to a locomotive in regular service. It was necessary to cut down the grate area considerably, but in spite of this the engine did good service, being practically smokeless and throwing no sparks, even with a straight stack and no netting, until destroyed by a roundhouse fire. The furnace was also applied to a number of the boilers of the St. Louis and San Francisco Railway Company, in stationary practice, in their shops and other buildings, where they are still running satisfactorily.

In 1888 a contract was made to place the Hawley furnace under an ordinary stationary boiler in the new factory of the Hamilton and Brown Shoe Company, St. Louis, under a very stringent guarantee. The boiler was 60 inches diameter, 20 feet long, with 18 6-inch flues. A similar boiler was set with the ordinary furnace, in the same room. The results in smoke abatement, fuel economy, and capacity were so satisfactory as to lead to the application of the Hawley furnace to the other boiler very shortly afterwards. This case marked the beginning of the introduction of this type of furnace into general stationary practice.

A brief description of the characteristic features of the Hawley setting will be of interest. In the earliest forms it consisted of a single row of water grates, these being necessary on account of the high temperatures developed. These water grates were made of 2-inch pipe, placed level, and connected with the circulation system of the boiler by water boxes, or headers, and connecting pipes. The supply pipe leading to the front headers was usually taken from near the bottom of the front end of the shell, and the discharge was delivered near the water line. The

Digitized by Google

rear end of the fireplace above the grates was closed off tightly, by means of a hanging water leg riveted to the shell of the boiler, in which suitable openings had been cut. In order to insure circulation in the tubes and prevent their burning off, it was found necessary to have the rear end of each tube project far enough into the water leg to permit attaching an elbow, into which was screwed a riser, reaching up into the main body of the water in the boiler. Further experiments showed that it was usually desirable to put in two rows of water grates, and to stagger them. Even then, however, a considerable amount of unburned fuel fell through the grates, and was hauled out with the ashes, unconsumed. This caused a loss of efficiency when the boilers were crowded, and led to the adoption of the lower grate, which is of the ordinary pattern. This form of the furnace is shown in Fig. 219.

It was at the Hamilton and Brown Shoe Works, above referred to, that the necessity for the lower grate became evident, and where it was first applied by Mr. Hawley. It is now an accepted feature of all forms of the Hawley furnace, and to it, in my opinion, are largely due the excellent results secured in capacity, efficiency, and smokelessness.

In the earlier forms of the furnace the water grates were level. It was soon found that, by placing them on an incline rising to the rear, the circulation was much improved, and the probability of burning off tubes greatly reduced. This plan was then regularly adopted, and the pitch gradually increased until the standard is now 2½ to 3 inches per foot of grate length.

It was soon found, also, that the riser pipes in the rear water box were a source of trouble. Sometimes they became disconnected from the elbows, and when new grates were put in it was difficult to attach the elbows and risers to the grates, on account of interference with the other risers and with stay-bolts. When the risers were not connected, the grates burned off in a short time. This proved a serious difficulty, requiring in a number of plants the almost constant presence of boiler makers. Part of the boiler plant was therefore out of service a large portion of the time, and repair bills were large. Experiments were then made with other forms of construction, and a water box, or header, was finally adopted for the rear end, similar to that used for the front end of the grates, the space intervening between it and the shell of the boiler being built up solidly by a

Digitized by Google

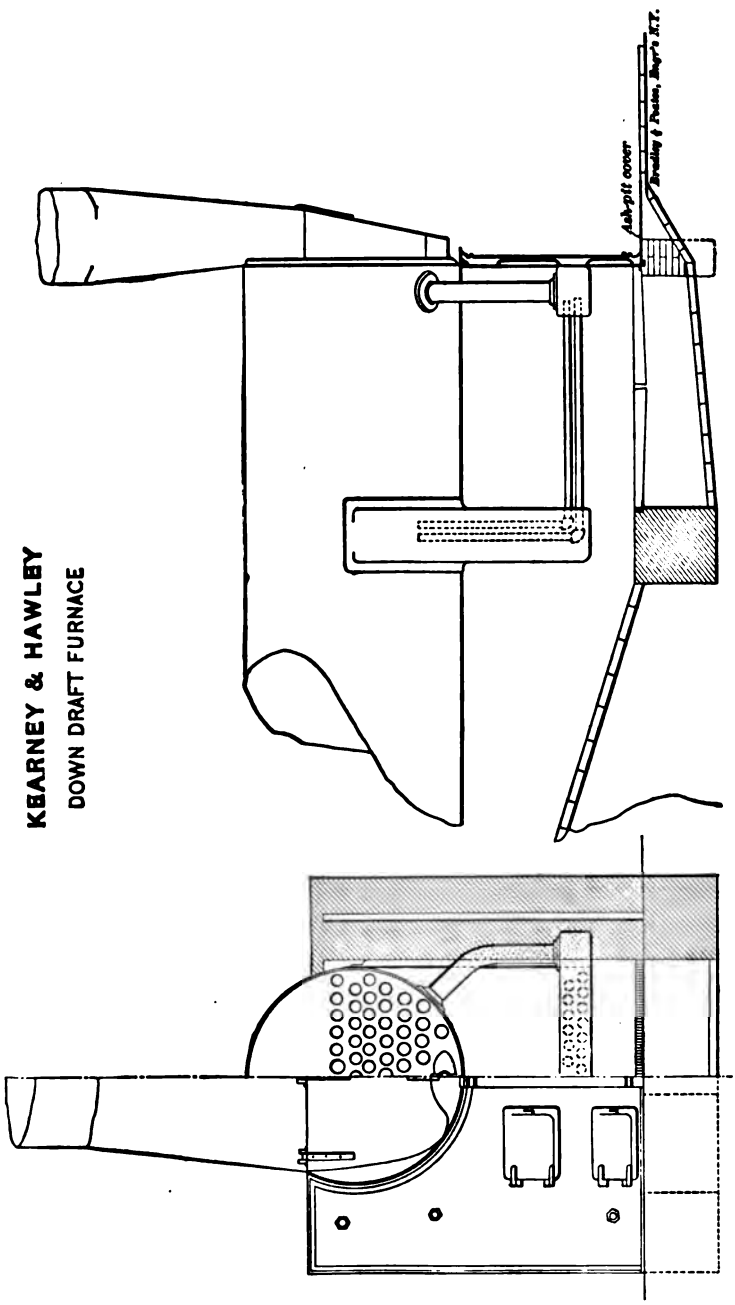

FIG. 219.

Digitized by Google

9-inch firebrick wall. Connections were made from each end of the rear water box to the boiler shell, some distance back from the front of the boiler, and just below the water line. This expedient proved satisfactory, greatly reducing the number of tubes burning off.

This rear drum is now made in two forms. That adopted by the St. Louis manufacturers is simply a riveted drum 20 inches in diameter. This large diameter permits the water grates to be screwed in, without the necessity of flattening the sides of the tube, as is customary with the form adopted by the Chicago manufacturers, whose rear drums are 10 inches in diameter. In the St. Louis form the drum is large enough to permit a man to enter it. By placing a light through a hand-hole into the front drum—which is usually 8 or 10 inches diameter—it is possible to look through every tube, and thus ascertain its exact condition. The large drum, however, offers a favorable place for the accumulation of sediment, which may cause it to burn, on account of the high temperatures to which it is exposed. No such accident, however, has occurred, so far as I can learn. Fig. 220 shows the St. Louis form of construction. It shows but a single row of water grates, this form still being frequently used, as being easier handled.

This figure also shows the present method of building the boiler fronts. In the early form, shown in Fig. 219, the ashpit was wholly below the floor line, and was extended out in front of the boiler front, that portion of it being covered with sheet-iron plates, which were removed when cleaning the ashpit. This arrangement proving unsatisfactory, it was replaced by the three-door front shown in Fig. 220. This plan raised the average level of the upper grates to a point some 18 inches above that of the ordinary furnace, making it necessary for the fireman to lift the coal that much higher, and making the firing considerably more laborious. It has now become customary to raise the floor a little at a point some three feet away from the front (see heavy dotted line in Fig. 220), thus permitting the fireman to stand at the usual level with reference to height of grate. It is desirable also to have the ashpit slope to the rear, to facilitate cleaning.

As will be clearly seen from the drawings, the operation of the down-draught furnace is directly opposite to that of the ordinary setting. Very little air is admitted below the water grates; the

Digitized by Google

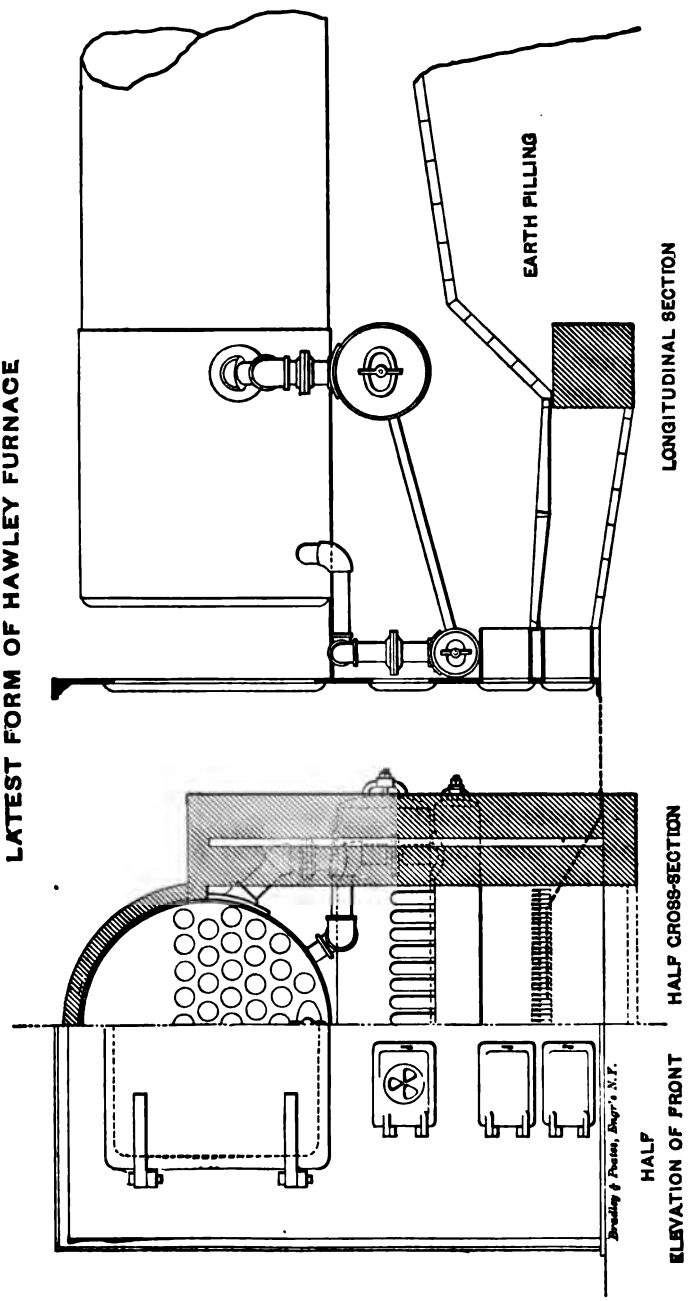

FIG. 220.

Digitized by Google

entire supply of coal, and practically all the air, entering above. The fire burns downward instead of upward, there being "no thoroughfare" except downward through the grates. The gaseous products of combustion, together with the finely divided carbon particles which form the visible smoke, are forced through the incandescent mass of coal and are highly heated, after which they meet the equally hot flame from the lower grates, on which there is burning what is practically a coke fire. The combined water of the volatile matter in the coal, as well as its moisture, are decomposed into hydrogen and carbonic oxide gases. These combine with air supplied below the grate, or drawn downward through it, and burn, thus adding to the efficiency of the furnace instead of impeding it. The separated carbon meanwhile is transformed into carbonic acid gas, which is invisible. The result is almost complete combustion. Such little additional air as is needed is furnished through the registers of the doors between the two grates, or through those of the ashpit, the doors of which are sometimes left partly open also.

In practice it is found that, as an average, the upper grates do probably 90 per cent. of the work. When the boilers are not crowded little or no fuel is burned on the lower grates. When there is a demand for an increased amount of steam the fireman runs his slice-bar along or between the upper grates, causing a considerable amount of half-burned coal to drop through to the lower grates, where its combustion is completed.

It will be seen that the water grates and headers add somewhat to the heating surface, and thus increase the capacity of the boiler. It has been found, however, that this reversing of the path of the gases, and requiring them to traverse the tortuous passages, makes necessary a somewhat increased chimney capacity, if it is desired that the boilers be capable of doing as much work as with the ordinary setting. If the demand for steam never greatly exceeds the rated capacity of the boiler the ordinary chimney will answer, it simply being necessary to carry thinner fires. The best results, however, in efficiency and smokelessness, as well as in capacity, are secured by having a chimney of ample height; a statement, however, which is equally true with regard to ordinary settings, which rarely have enough chimney.

In order to make a fair and definite comparison of the Hawley

Digitized by Google

down-draught setting with the ordinary furnace, the Smoke Commission of the city of St. Louis, of which the writer is a member, made a competitive test at the plant of the William J. Lemp Brewing Company, on July 11, 1893. The boilers were identical in every respect except as regards their furnaces, and that the chimney for the down-draughts was 143 feet high, and for the common battery 100 feet high, above grate level. The official reports of these tests are appended to this paper. (Table I.) It will be noticed that in both cases the boilers were run at more than double their nominal rating, and that the efficiency of the Hawley was over 21 per cent. higher than that of the common furnace.

The smoke record (see chart, Fig. 222) shows a reduction in the smoke of nearly 96 per cent, even under these extraordinarily severe conditions. Fig. 221 shows a chart made by the writer from the

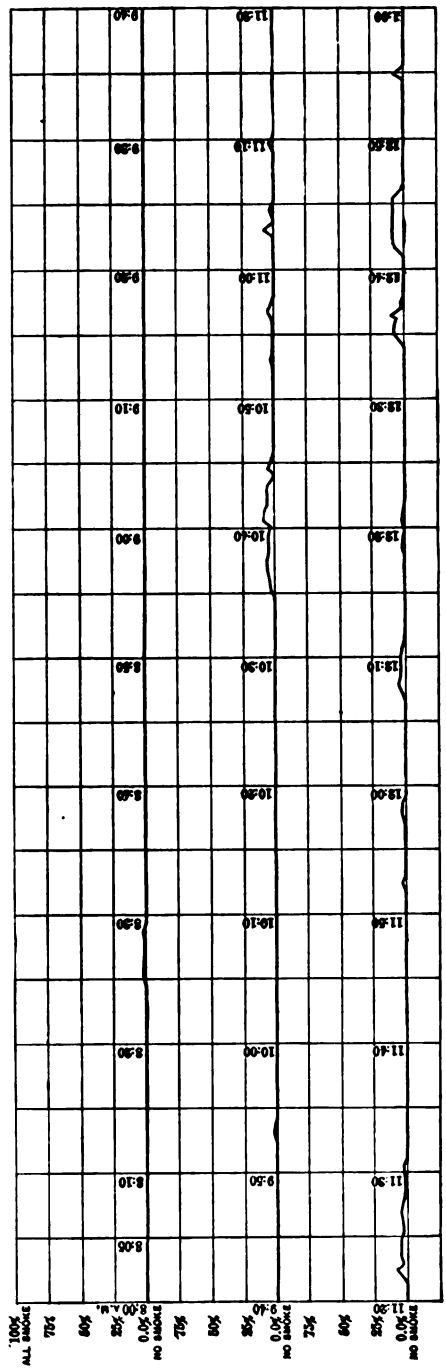

FIG. 221.

Digitized by Google

chimney of a Heine boiler, set with the Hawley furnace, at a time when the boiler was being run at 25 per cent. above its rating. It shows the remarkably low figure of only $\frac{2}{3}$ of 1 per cent. of smoke—in fact, there was absolutely no smoke except while the fires were being cleaned.

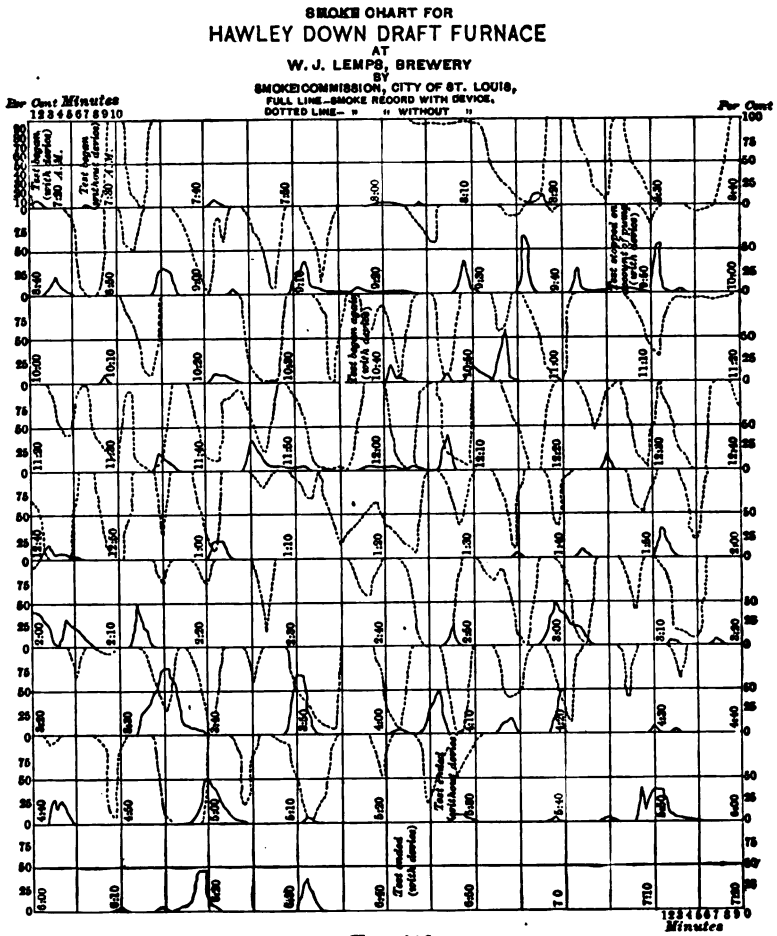

FIG. 222.

It will be seen in Figs. 219 and 220 that in the standard form of construction the fireplace is immediately under the front end of the boiler. This usually cuts off from 50 to 60 square feet of valuable shell heating surface, and, furthermore, must interfere largely with the circulation of the water in the boiler. In a few

Digitized by Google

instances external fireplaces have been built, but their somewhat greater cost, the increased space occupied, the necessity for a special form of front, and the difficulty found in supporting the firebrick arches over the water grates, have prevented the general adoption of this plan. In my opinion, however, it possesses important advantages in capacity and efficiency, and should be followed wherever sufficient space is available.

With the present form of water-drums and tubes there is but little danger of the tubes burning out unless the feed-water is bad. This is a point that must be carefully looked into when it is proposed to use the down-draught furnace. It is a matter, however, that should always have attention, whatever the type of boiler or setting; and as there are now so many good systems of water purification there is little excuse for permitting heating surfaces to become foul with scale. When the tubes burn out they do so without causing damage to the surroundings. Sometimes only the threads are stripped, and at other times the tube splits, resulting in a large, but not serious, leak of water. In such cases the boilers are generally run in their regular service until the usual time of shutting down, and cases are on record where the boilers have been run until Saturday night—almost a full week. It is desirable, however, that at least one side of the boiler be accessible, in order to afford access to both drums, particularly with bad feed-water. This necessitates a passage-way between each pair of boilers.

A few cases of grate renewals have been due to careless or ignorant handling of the slice-bar by the fireman, bringing a severe cross-bending strain on the tubes. This, of course, must be carefully guarded against.

There being considerable special ironwork connected with the Hawley setting, this type of furnace is necessarily more expensive in first cost than some others. Measured in results, however, the advantages would, in most cases, appear to warrant a considerably greater investment than is ever required.

The conditions under which it would appear unwise to use the Hawley down-draught furnace for smoke abatement would seem to be:

First.—Where the feed-water is quite impure, and cannot be readily improved.

Second.—Where the feed-water is bad, and the boiler is not accessible from the side.

Digitized by Google

Third.—Where the draught is poor, and the boilers are hard worked. Usually, however, the height of chimney can be increased.

Fourth.—Where there is but a single boiler. The possibility of an occasional tube renewal might cause the interruption of the service for several days. This danger would be very remote with reasonably pure feed-water.

Fifth.—Where the plant is of such a size or character as not to warrant the investment.

Evaporative tests made by myself and others indicate that the Hawley furnace adds to the efficiency of improved water-tube forms of boilers, although the percentage of increase is not so great as with the ordinary boilers.* The design of the furnace is such as to make it readily applicable to any form of boiler.

I recently prepared a series of instructions to firemen for a large plant operating the down-draught furnaces. These are appended hereto. It will be seen that the requirements are not at all difficult of comprehension and execution.

In some cases the use of this furnace has been found to add to the labor cost. This was due in a few cases to the increased height to which the coal had to be lifted, and sometimes to the debilitating effect of the radiant heat pouring out through the open fire-doors into the face of the fireman. Raising the floor level has remedied the former trouble, and the latter has been largely reduced by an improved form of door, which can be so placed as to keep the heat off the fireman, while still admitting an ample air supply. In other cases the draught was insufficient, and large demands for steam have necessitated increased labor. In still other cases the firemen have not thoroughly understood the best method of handling the fires, and have not directed their efforts to the best advantage. With the latest form of construction, proper draught, intelligent and careful handling of the fires, there would appear to be no reason why the amount of labor should be increased. On the contrary, it ought to be decreased, as there is less coal to be handled.

Not the least of the many advantages afforded by the down-draught type of boiler furnace is the fact that the heating surfaces are exposed to practically constant temperatures. There is no alternate heating and cooling, as is the case with the common

* See page 794.

Digitized by Google

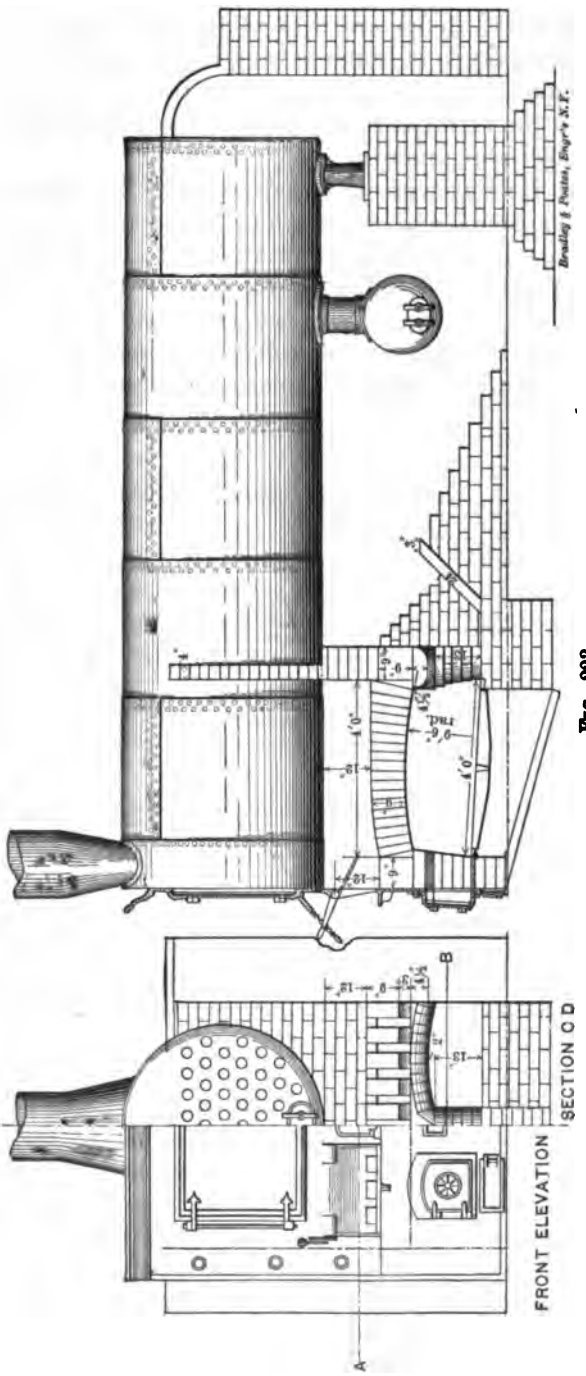

FIG. 228.

Digitized by Google

setting, when the doors are opened to admit fresh charges of fuel. That this type of boiler setting is destined to wide-spread use is demonstrated by the fact that three companies alone have within the last five years applied it to 1,600 boilers, aggregating 240,000 horse-power.

While the Hawley type of down-draught furnace is perhaps the best known, others are coming into use, which promise well, although none have, as yet, met with very wide adoption. One of these, invented by Mr. Jos. M. Thomas, of St. Louis, is shown in Figs. 223 and 224. In essential characteristics it resembles the Hawley, the principal point of difference being the substitution of a series of firebrick arches in place of the water grates.

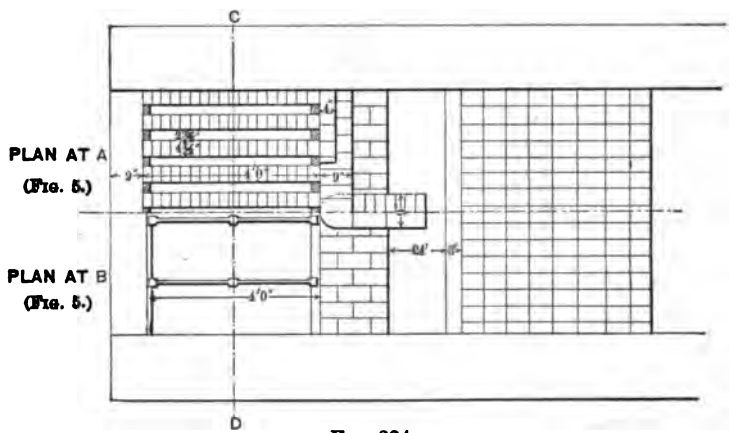

FIG. 224.

It possesses two important advantages: first, the absence of any connection with the pressure system of the boiler, thus avoiding trouble from that source; and, second, the brick arches act as reservoirs of heat, and do not cool the fires as the water grates do. It would be reasonable, therefore, to expect higher temperatures, and increased efficiency and smokelessness. Appended hereto are found the results of two tests made by the writer on boilers set with and without the Thomas furnace. My expectations as to smokelessness and efficiency were fully realized. I had expected some loss in capacity, due to the necessarily limited percentage of air-space through the firebrick grates, but in this I was agreeably disappointed.

The difficulty with this setting thus far has been the short life of the grates, varying from thirty days to six months, de-

Digitized by Google

pending entirely upon the character of the service, and the care with which the firing is done. Where the boilers are crowded, or where the firemen are careless, the arches last but a short time. If their durability could be increased to an average of, say, four months—which ought to be possible with careful handling, if the boilers are not unduly crowded—the small expense and trouble connected with their renewal would be fully warranted by the improved results. Experiments are now in progress with a view of securing a more highly refractory material out of which to make the grates, and until this is found, no extended effort will be made to push the introduction of the furnace.

Another form of down-draught furnace has been developed by Mr. J. A. Baldwin, of Benton Harbor, Michigan. It is similar in many respects to the Hawley, the principal difference being that, instead of admitting the air through open doors above the water tubes, it enters through ducts in the masonry side walls, thus being preheated to some extent. Part of this air is discharged above the water grates, and part below them. The lower grates, instead of being ordinary bars, consist of perforated wrought-iron plates. The preheating of the air should be an advantage, if it is not accomplished at the expense of some other desirable feature, such as smokelessness, capacity, or efficiency.

Only a few of these furnaces have been built, and I have had no opportunity of examining them myself, but I am told that they are doing good work. No accurate evaporative tests have been made.

Another form is that invented by Mr. W. S. Plummer of St. Louis. Mr. Plummer has all his grate surface on one level, and divides it lengthwise into three parts. The two outer parts are of the ordinary pattern of up-draught grates, while the central portion consists of water tubes connected with the circulation system of the boiler. A solid brick wall blocks off the rear of the fireplace, and extends down to the bottom of the ashpit, except immediately under the rear end of the water tubes. There are two partition walls in the ashpit, running lengthwise, which separate the up-draught from the down-draught portion of the furnace. The firing is done just as in the ordinary furnace, but the only escape for the gases is downward through the central water grates. The plan is working satisfactorily on a small

Digitized by Google

scale in St. Louis, and is now being applied to a large boiler plant, where its operation will be watched with interest. The difficulty would seem to be the necessity for great width of grate surface, it being necessary to get the entire amount of surface in one level, while, in the Hawley furnace, it is divided over two different planes. An increase can, of course, be had by lengthening the grates, but this is not always desirable.

A somewhat similar form is that invented by Mr. E. M. Bosley of St. Louis, and applied in several cases in connection with his "incandescent" internally fired boilers. He divides his fire-box into two parts, with the dividing line at right angles to the centre of the boiler. The front half consists of an ordinary up-draught grate. In the rear of this is a 10-inch front water drum or header, extending clear across the furnace, and connected by means of 2-inch water grates to a similar drum in the rear. An ashpit of the usual form is built under the front grate, and a closing-off wall above the rear drum. The fire is burned on the front grate in the usual manner, a bed of fire being also carried on the water grates. The path of the gases is up through the front grate in the usual manner, and down through the water grates in the rear. A lower ashpit permits access from the front to the space underneath the water grates

Both the Plummer and Bosley forms of down-draught furnaces appear to utilize the heating surface of the shell immediately overhead to better advantage than the Hawley, but, on the other hand, neither of them have the second grate located where it will catch and consume the droppings from the water grates. So far as I know, no exhaustive investigations or tests of either of these types of setting have been made.

There are other types of down-draught furnace, notably that of Post & Sawyer of Boston, which I believe has been applied only in connection with their internally fired "Complete Combustion" boiler, and which does not use a lower grate. The other forms are, in general, modifications of those described here, being few in number and relatively unimportant.

The system in its best shape is not perfect. Much has been done during the last few years in improving details so as to increase the efficiency, durability, and reliability of the apparatus, but there is room for further improvements. Even in its present condition, however, it is well worthy of the careful study of progressive engineers everywhere.

Digitized by Google

INSTRUCTIONS FOR THE OPERATION AND CARE OF THE HAWLEY DOWN-DRAUGHT FURNACE, TO SECURE EFFICIENCY AND PREVENT SMOKE WITH ILLINOIS COALS.

PREPARED BY WILLIAM H. BRYAN, CONSULTING ENGINEER, ST. LOUIS.

Fire frequently and in small quantities. Break up the lumps to fist size. Fire on the upper grates only, carrying a bed of uniform thickness over the entire grate surface. Avoid thin or bare spots.

The proper thickness of fire-bed depends upon the intensity of the draught and size of the coal. Lump coal and good draught require a thick fire, say 8 to 10 inches, while fine coal and poor draught may render it necessary to reduce the thickness as low as 4 inches. Don't let the elevation of the grates at the rear deceive you, but be sure the thickness of the fuel-bed is the same there as at the front.

When slicing, be careful that no green coal falls through to the lower grates. Do not let green coal get to the under side of the upper fire next to the water grates. When slicing push the bar between or along the water grates, and draw it back again without disturbing the fire. Lift the slice-bar just enough to break the caked bed. Use the slice-bar as little as possible. Be very careful not to strain the tubes with the slice-bar.

See that the bed of coal on the upper grates does not get either too thick or too thin. The former will reduce the capacity, and the latter cause smoke.

Do not close the upper doors while fresh coal is on the fires.

Do not reduce the draught by closing the dampers, shutting the fire doors, or otherwise, except when absolutely necessary.

Keep the lower grates well covered, but do not let the bed get too thick, nor permit clinker to accumulate.

Keep the doors between the upper and lower grates closed, except when cleaning lower grates, say two or three times a day.

Admit a small amount of air under the lower grates, except when they are bare immediately after cleaning.

When cleaning the upper grates see that none of the water tubes are uncovered or exposed. The quantity and location of clinkers can usually be determined by running the slice-bar through the fire. They can then be loosened and hooked out without seriously disturbing the fire-bed. It is better to watch

Digitized by Google

for clinkers closely, and hook them out as fast as they are formed, rather than to attempt a general cleaning of the entire fire-bed at one time.

Do not clean the lower grates when there is much green coal on the upper grates. Immediately after cleaning slice the upper grates carefully, so as to get a covering of live coals for the lower grates.

The ashpit should be cleaned as often as is necessary to keep it from filling up and obstructing the admission of air to the lower grates. Never clean the ashpit while the lower grates are bare or thinly covered.

Clean as quickly as possible, so as to avoid cooling the fires.

When cleaning the boilers see that the circulating pipes, and front and rear drums, to which the water grates are connected, are thoroughly washed out under pressure. Those parts which can be examined should be looked into at frequent intervals, and those which can be cleaned by mechanical means should have frequent attention. Where accessible, the water grates should be washed out by inserting a hose into each one.

TABLE I.

RESULTS OF EVAPORATIVE TRIALS,

Made at St. Louis, Mo., on Compromise boilers, with Hawley and common furnaces, at the Wm. J. Lemp Brewing Association, by the Smoke Commission, City of St. Louis, to determine their efficiencies and smoke records.

Kind of furnace	Common.	Hawley.
Number or other designation of trial	1	2
Date	July 11, 1893	July 11, 1893
Duration.....hours	10	8
Number of boilers in operation	2	2
State of the weather	Clear.	Clear.
Dimensions and Proportions.—Kind of boiler	Hor. Ret. Flue.	
Dimensions of shell, diameter and length	60″ x 24′	
Number and diameter of tubes	18—6″	
Grate surface.....area square feet	58	*52.75
Water heating surface.....square feet	1879	1948
Superheating surface.....square feet	None.	
Ratio of grate surface to water heating surface.....1 to	32.4	36.92
Mean opening of damper (percentage of full opening)	100	
Chimney dimensions, height and diameter	100 x 48	143 x 48

* Upper grate only.

Digitized by Google

Average Pressures.—Atmosphere, as per barometer...inches	30.05	30.05
Steam in boiler, by gauge.....lbs.	97.85	99.53
" " absolute.....lbs.	112.55	114.23
Draught suction.....inches of water	.66	.80
Average Temperatures.—Of external air, deg. Fahr.	89.3	89.3
Of boiler room.....deg. Fahr.	96.5	96.5
Of escaping gases entering chimn'y, deg. Fahr.	542.5	540
Of feed-water entering boiler.....deg. Fahr.	167.4	162.96
Of steam in boiler..... deg. Fahr.	336.	337.36
Fuel.—Kind of coal.....	Gillespie.	
Size of coal.....	Small Lump.	
Cost per ton of 2,000 lbs., delivered.....	$1.75	
Calorific power by calorimeter, B.T.U. per lb.	9,722.4	9,976.2
Theoretical evaporative power, from and at 212 deg. Fahr., in lbs. water per lb. coal...	10.07	10.33
Total quantity consumed.....lbs.	24,000	17,200
Total ash, clinkers, and unburned coal....lbs.	3,204	2,462
Proportion of ash, etc., to coal.....per cent.	13.35	14.31
Unburned coal in ash.....lbs.	1,008.3	615
True ash.....lbs.	2,195.7	1,847
Total combustible burned..... lbs.	20,796	14,738
Mean thickness of fire.....inches	6	9 to 10
Combustion per Hour.—Coal act'y consumed...lbs.	2,400	2,150
Combustible actually consumed.....lbs.	2,079.6	1,842.25
Per square foot grate surface, coal.. ....lbs.	41.88	40.76
" " " comb'ble..lbs.	35.85	34.92
Per square foot heating surface, coal.....lbs.	1.277	1.10
" " " comb'ble..lbs.	1.11	.95
Calorimetric Tests.—Quality of the steam (dry steam = 1).....	Dry.	
Am't of water entrained in the steam, per cent.	None.	
Amount of superheating.....deg. Fahr.	None.	
Water.—Amount apparently evaporated.....lbs.	125,982	111,613
Amount actually evaporated (corrected for entrainment).....lbs.	125,982	111,613
Factor of evaporation.....	1.086	1.091
Equivalent evaporation into dry steam from and at 212 deg. Fahr.....lbs.	136,816.45	121,769.78
Economic Evaporation.—Per pound of coal:		
Water actually evaporated (corrected for entrainment)..... ....lbs.	5.249	6.489
Equivalent from and at 212 deg. Fahr.....lbs.	5.700	7.079
Per pound of combustible.—Water actually evaporated (corrected for entrainment)...lbs.	6.058	7.57
Equivalent from and at 212 deg. Fahr.....lbs.	6.560	8.262
Evaporation per Hour.		
Water actually evaporated (corrected for entrainment).....lbs.	12,598.2	13,951.6

Digitized by Google

Equivalent from and at 212 deg. Fahr... .lbs.	18,681.6	15,221.2
Per square foot heating surface.—Water actually evap'd (corrected for entrainment) lbs.	6.705	7.162
Equivalent from and at 212 deg. Fahr.....lbs.	7.281	7.814
Per square foot grate surface.—Water actually evaporated (corrected). .....lbs.	217.21	264.48
Equivalent from and at 212 deg. Fahr.....lbs.	235.89	288.55
Efficiency.		
Percentage of total calorific power utilized, or efficiency.....per cent.	56.60	68.53
Horse-Power.		
Actually developed on basis of 34½ lbs. water evaporated per hour from and at 212 deg. Fahr... .....horse-power	396.57	441.19
Commercial rating..... .....horse-power	188	207
Proportion capacity developed is of commercial rating.....per cent.	210.9	213.1
Heating surface required to develop 1 horse-power.....square feet	4.74	4.41
Smoke Record.		
Mean smoke production.....on a scale of 100	74.16	3.19
Reduct. of smoke by furn. being tested, per cent.		95.67
Analyses (*Average*).—Coal :		
Moisture.....	8.60	8.84
Volatile matter.....	29.506	29.858
Fixed carbon.....	50.804	48.452
Sulphur	1.360	1.58
Ash.....	10.23	11.27
Refuse (ash, clinkers, unburned coal, etc.) :		
Moisture.....	Red. to dry Weight.	
Volatile matter.....	1.91	1.
Fixed carbon.....	29.56	23.98
Ash.....	68.53	75.02
Gases :		
Hydro-carbons.....	None.	None.
Carbonic oxide.....	.43	.14
Carbonic acid.....	5.41	7.61
Oxygen.....	9.77	9.52
Nitrogen (by diff.).....	84.39	82.73

TABLE II.

Results of Evaporative Trials,

Made at St. Louis, Mo., on Horizontal Flue Boilers, with and without the Thomas Smokeless Furnace, at Christy Fire Clay Works, for Thomas Furnace Company, to determine their capacity and efficiency.

	Common.	Thomas.
Kind of furnace.....		
Number or other designation of test.....	1	2
Date..... ...1895.	Feb. 11	Feb. 12

Digitized by Google

Duration.....hours	9	9
Number of boilers in operation.....	2	2
State of the weather	Fair.	Snowing.
Dimensions and Proportions.—Kind of boiler.....	Hor. Flue.	
Dimensions of shell, diameter and length.....	48″ x 20′	46″ x 20′
Number and diameter of tubes.....	4 x 11″	4 x 10″
Grate surface, 9.67′ wide, 4′ long. Area square feet	38.67	
Water heating surface.....square feet	795	659
Superheating surface.....square feet	None.	
Percentage of air space in grate. .....per cent.	45	31.68
Ratio of grate surface to water h'ting surface..1 to	20.56	17.05
Mean opening of damper (percentage of full opening).....	100	
Chimney dimensions, height and diameter.....	60′ x 30″	
Average Pressures.—Atmosphere, as per barometer..... .....inches	29.681	29.476
Steam in boiler, by gauge.....lbs.	77.65	74.40
" " absolute.....lbs.	92.35	89.10
Draught suction.....inches of water	.3733	.4097
Average Temperatures.—Of external air....deg. Fahr.	23.25	21.60
Of boiler room. .....deg. Fahr.	45.22	62.51
Of escaping gases entering chimney. ..deg. Fahr.	About 900	618.24
Of feed-water entering boiler.....deg. Fahr.	51.86	51.89
Of steam in boiler..... .....deg. Fahr.	322	319
Fuel.—Kind of coal.....	Mount Olive.	
Size of coal.....	Lump.	
Cost per ton of 2,000 lbs., delivered.....	$1.375	
Calorific power by calorimeter....B. T. U. per lb.	11,100	
Theoretical evaporative power, from and at 212 deg. Fahr., in lbs. water per lb. coal.....	11.49	
Total quantity consumed.....lbs.	10,375	8,000
Total ash, clinkers, and unburned coal.....lbs.	1,540	1,036
Proportion of ash, etc., to coal.....per cent.	14.84	12.95
True ash.....lbs.	1,048	808
Total combustible burned.....lbs.	8,835	6,964
Mean thickness of fire.....inches	6	8
Combustion per Hour.—Coal actually consumed.....lbs.	1,152.8	888.88
Combustible actually consumed.....lbs.	981.7	773.77
Per square foot grate surface, coal.....lbs.	29.81	22.99
" " " combustible....lbs.	25.39	20.01
Per square foot heating surface, coal.....lbs.	1.45	1.35
" " " combustible...lbs.	1.235	1.185
Calorimetric Tests.—Quality of the steam (dry steam = 1)	Dry.	
Amount of water entrained in the steam..per cent.	None.	
Amount of superheating..... .....deg. Fahr.	None.	
Water.—Amount apparently evaporated.....lbs.	46,350	43,739
Amount actually evaporated (corrected for entrainment)..... .....lbs.	46,350	43,739

Digitized by Google

Factor of evaporation	1.2014	1.2012
Equivalent evaporation into dry steam from and at 212 deg. Fahr.....lbs.	55,685	52,539
Economic Evaporation.—Per pound of coal :		
Water actually evaporated (corrected for entrainment).....lbs.	4.47	5.47
Equivalent from and at 212 deg. Fahr.....lbs.	5.37	6.57
Per pound of combustible.—Water actually evaporated (corrected for entrainment).....lbs.	5.25	6.28
Equivalent from and at 212 deg. Fahr.....lbs.	6.30	7.54
Evaporation per Hour.		
Water actually evaporated (corrected for entrainment).....lbs.	5,150	4,860
Equivalent from and at 212 deg. Fahr.....lbs.	6,187.2	5,837.7
Per square foot heating surface.—Water actually evaporated (corrected for entrainment).....lbs.	6.48	7.37
Equivalent from and at 212 deg. Fahr.....lbs.	7.78	8.86
Per square foot grate surface.—Water actually evaporated (corrected) .....lbs.	133.18	125.67
Equivalent from and at 212 deg. Fahr.....lbs.	160.	150.96
Efficiency.		
Percentage of total calorific power utilized, or efficiency.....per cent.	46.71	57.5
Water evaporated for $1 worth of fuel... ...lbs.	6,504	7,959
Cost of evaporating 1,000 lbs. of water.....cents	15.38	12.56
Coal consumed per horse-power per hour.....lbs.	6.43	5.25
Increase of efficiency made by the Thomas furnace		22.4
Horse-Power.		
Actually developed on basis of 34½ lbs. water evaporated per hour from and at 212 deg. Fahr.....horse-power	179.34	169.18
Commercial rating, at 7½ square feet heating surface.....horse-power	106	87.85
Proportion capacity developed is of commercial rating.....per cent.	169.19	192.56
Heating surface required to develop 1 horse-power.....square feet	4.43	3.89
Analyses (Average).—Coal :		
Moisture.....	12.04	
Volatile matter.....	32.95	
Fixed carbon.....	41.63	
Sulphur.....	3.28	
Ash.....	10.10	
	100.	

Since forwarding the paper for publication, in advance of the Convention, I have completed two series of boiler trials on Heine boilers, of 375 horse-power each, in the plant of the Edison Illumi-

Digitized by Google

nating Company, St. Louis, and the following is an abstract of the results:

Kind of furnace	Common	Hawley	Hawley
Date	April 16, 1895	May 15, 1895	May 21, 1895
Duration.....hours	10	10	8
Coal, kind		Hurricane Mt. Olive.	
Heat Value, B. T. U.....per pound	11,481	11,455	10,771
Theoretical evaporative power per pound from and at 212°	11.89	11.86	11.15
Coal per square foot grate surface, per hour	32.44	23.92	28.75
Water per square foot of heating surface from and at 212°	5.40	3.77	4.16
Water per square foot per pound coal from and at 212°	8.335	8.96	8.22
Efficiency.....per cent.	70.114	75.54	73.69
Draught.....inches	.745	.375	.60

It will be noticed that the draught is much less in the Hawley trials, due to the boiler being located further from the chimney. Better draught would probably have improved the efficiency. Nevertheless, there is an increase of about 8 per cent. The drop in efficiency, due to inferior coal, is well shown in the last column. These results are the best that have thus far been secured with similar coal, so far as I am aware.

DISCUSSION.

Mr. Alexander Dow.—In the public lighting plant of Detroit there may be seen seven double-deck shell boilers, each of 3,000 square feet heating surface, with $\frac{3}{4}$-inch shells, adapted for 160 pounds steam pressure, which have been fitted with the Hawley down-draught furnace, and further, with a firebrick arch and combustion chamber immediately behind the furnace. The arch protects the shell of the boiler from the direct action of the flame, and at the same time maintains the temperature necessary for the complete combustion of the fuel. The boilers have internal diaphragms, controlling their circulation, and the uptake of the Hawley furnace is carried to the upper drum. The whole design is due to Mr. C. C. Peck, of Rochester, N. Y. Four of these boilers have been in service. The normal work of the plant requires, at present, that one boiler be worked nearly to its capacity during the hours of street lighting, and the other boiler of the pair is kept in reserve, with a banked fire and low steam pressure.

Digitized by Google

At the present season of the year, during about eight hours the triple-expansion engines of the plant are in service, and the boiler is worked at 160 pounds. During the remainder of the twenty-four hours there is a very light load, and the pressure is allowed to run down to approximately 90 pounds.

Our experience with our Hawley furnaces dates from February 1, when they were put in service for heating, and to furnish steam for preliminary work. The actual service of the plant dates from April 1, but only a small portion of its capacity is as yet in use. Tests have been made on the boilers and furnaces to ascertain that they met the contractor's guarantees, but these were of a limited character only, and are not suitable for publication. Our experience, however, has been varied intentionally; we having tried every manner of firing known to us, and all kinds of soft coal, from Pocahontas lump down to a mixture of slack and dust to which the seller would not attach a name. We have learned definitely that the furnaces will consume any fuel which can reasonably be termed coal, with economy, and without noticeable smoke. Further, that the grates will burn from three to four times the coal per square foot of surface that can be burned on plain grates, with the same draught and final temperature of gases; in other words, that the furnaces will stand severe forcing. We are still experimenting, with a view to finding the most economical grade of fuel, and while our data have not been finally correlated, they appear to indicate that the most steam per dollar can be made with a fairly good quality of coal. The temptation to burn a poor quality of slack, at a low price, in such furnaces, is very great, but our data, which include all freights and handling, would indicate that economy lies with the higher grades.

Mr. A. F. Nagle.—I am glad to see this contribution of engineering facts from actual practice.

I wish to call attention to the low efficiencies obtained in these trials. In the first case, with the common setting, only 56.6 per cent. was realized, and with the Hawley furnace only 68.53 per cent. The escaping gases were precisely the same with each furnace, namely, 540 degrees. The rate of combustion was practically the same. If the Hawley furnace produced a more perfect combustion, thus increasing the efficiency of the boilers, why should not the escaping gases have been of a higher temperature? Would not that be a natural inference? However, I do not place too great confidence in the accuracy of pyrometric measurements.

Digitized by Google

But, approximately, they are probably correct, and while the temperature is high (540 degrees), this high temperature of itself does not account for the low efficiencies obtained. The figures given by the author are in agreement with my own experience and observation, and I believe there is yet to be made a great improvement in burning our western cheap soft coals.

The Hawley furnace is, no doubt, a step in the right direction, but I believe we should attain an efficiency of 80 per cent. with the best type of boiler.

The boilers in this case were not of a type likely to give the most economic results, but owing to the character of the water at St. Louis they are a preferred type for that locality.

Can the author give us any data of the Hawley furnace applied to other types of boilers in the city of St. Louis where better efficiencies were obtained? Or, to put it broadly, what is the highest known efficiency of any furnace with any type of boiler using western cheap soft coals?

The indications are that these cheap soft coals must be burned at a much higher temperature than anthracite coal. It is possible that a forced draught may yet become a necessary adjunct to furnaces burning this class of fuel, and then with it will come the difficulty of procuring durable grates.

Mr. William Kent.—The last remarks in the discussion of this paper of Mr. Bryan's touch a most important fact—the low efficiency of the coals in the West; and the data given by the paper, together with those in the concluding addendum, give us a clew to that low efficiency. It is that there is not enough heating surface provided in the boilers. In the case in the addendum the highest efficiency is got with the least rate of water evaporated per square foot of heating surface, and the worst efficiency is given with the most rapid rate of evaporation. In some of the cases in the paper it would indicate that if the owner of the boilers would put in twice as much heating surface, or twice as many boilers as he has got, he would make from 10 to 20 per cent. saving. And that is the trouble with the whole boiler engineering of the West; they put in too few boilers for the work, and they are driving the boiler to 8 or 9 pounds of water evaporated per square foot of heating surface, when they ought to get it down to about 4 pounds.

In regard to the question asked in the discussion just read, why a boiler that gave only 540 degrees temperature in the chimney

Digitized by Google

should give such low efficiency, it may be said that low temperature in the chimney is often produced by too much air passing over through the grates, or through leaks in the wall, and low temperature in the chimney is not always an indication of good economy. Good economy cannot be obtained without low temperature in the chimney. But low temperature may be obtained by two causes—one, by proper absorption of the heat by the heating surfaces of the boiler, and the other by leaks of air through the brickwork, and it is for the engineer to find out in each case which is the cause of the low temperature.

Prof. R. C. Carpenter.—I think part of the difference in the economy of these two plants can be ascertained by examining the results of the flue gas analysis. It will be seen that in the case of the common boiler there was but a trifle over 5½ per cent. of CO_2, whereas in the Hawley furnace it was $7\frac{6}{10}$ per cent. It is considered that about 8 per cent. represents good firing, and anything else represents rather poor firing, so I think in this case that the character of the firing is better in the case of the Hawley furnace than in the other. There was more air admitted per pound of coal consumed for the common furnace than in the case of the Hawley. That is sufficient, I think, to account for all the difference in the results. I do not believe but that the common furnace, with equally good management, would have done as well. The tests show it was not so well managed. I commend Mr. Bryan's form for reporting a boiler test as an excellent one.

Mr. Kent.—I ask Mr. Bryan to tell us how the analyses were made which show no hydrocarbon in the gases. If the gases were collected over mercury, and care taken, they would have found some hydrocarbon.

Mr. Bryan.—That work was done by assistants from Professor Potter's laboratory. I trusted that entirely to his hands.

Mr. Kent.—Were the gases collected over the water?

Mr. Bryan.—Yes. As to the highest efficiency obtainable, I think my addition to the paper would perhaps answer the question. I personally know of no records better than 75.54 with our St. Louis coals. I have collected the results of a large number of trials from ordinary boilers, and the average efficiency is 51.33 per cent. The highest result which I have ever obtained on an ordinary boiler with the ordinary setting is 60.17 per cent., and that, queerly enough, was with slack coal; but I think it was largely due to extremely skilful firing. Of course, I attribute a

Digitized by Google

considerable part of the high efficiency shown in the first two trials on the board to the excellence of the fuel. We have found that the better the coal the better the efficiency. As to the rate of evaporation per square foot heating surface, and the rate of coal burned per square foot grate area, queerly enough, we have found our best efficiencies at these high rates. But it simply proves, to my mind, that we have the rate per square foot of grate about right. Certainly, if we put in more heating surface, leaving the grate as it was, our efficiency should improve; but the same result can be secured by cutting down the grate surface, and this is preferable, as our capacity is already ample.

Mr. E. D. Meier.—I would like to answer Mr. Kent in regard to the greater amount of heating surface. In that first trial, where we ran with a plain grate, we made some preliminary tests, running at a lower rate of combustion, and consequently at a lower performance per square foot of heating surface, with a decided loss in efficiency. And we found that a performance of 5.4 pounds per square foot heating surface represented for that particular case the most economical point. We afterwards ran another test—I don't know whether Mr. Bryan has the data here—where we got 8½ pounds from and at 212 degrees Fahr. per pound of coal from practically the same coal, running at just about the same rate—was it a little less or a little higher?

Mr. Bryan.—Very nearly the same—slightly higher.

Mr. Meier.—Then we have another test made with the Hawley furnace on a boiler of the same size. I do not think either of us has the data here. Professor Potter ran that test. We ran the boiler first about 20 per cent. above its rated capacity, and then ran it at 40, and the efficiency at 40 per cent. above was decidedly better. I believe that the whole question of the amount of heating surface is misunderstood. It depends upon a great many other circumstances what the proper amount of heating surface for a given set of conditions will be; and I believe the true solution will be found possibly in adding more heating surface, but not adding it in the boiler. I believe that we should let the gases escape from the boiler at a higher temperature than has been considered the best for economy, and then put those gases through some form of economizer.

Mr. F. W. Taylor.—May I inquire whether they have ever, on those same boilers, let the heating surface remain as it is—which is, of course, a fixed constant—and diminished the grate area?

Digitized by Google

With that combination you get a very high rate of combustion with your present heating surface, which comes to the same thing of which Mr. Kent speaks. A diminished grate, with a high rate of combustion on the grate, and the present heating surface, it seems to me would give us a higher efficiency than yet attained, if Mr. Kent is right, and I think he is.

Mr. Meier.—We have experimented with that, but there is one practical difficulty in the way of it, and that is that in most plants with which we have to deal they have occasional demands for forcing, and if we were to find the point where the grate itself was forced to its highest capacity, and fix its area by that, then, in spite of the larger heating surface of the boiler, we would not have grate enough for forcing the boiler afterwards. That is one difficulty. Another is that you have to have a certain proportion between the clear calorimeter area around the tubes and the amount of fuel burned, and, consequently, the quantity of the gases that passes through this area. Another illustration is found right in the experience of this same company; they have another plant where they have a different style of water-tube boilers, from which they have never been able to get more than 7.6 pounds, whereas we got 8.33 there, although the other boilers evaporated perhaps only 60 per cent. as much per square foot of heating surface.

Mr. John A. Laird.—With reference to Mr. Kent's criticism of our western boiler practice, I would like to give the Society a little of our experience in the St. Louis Water Department, with eastern boiler-makers and experts. Some two years ago bids were opened for six 300-horse-power boilers. A bonus of $1,500 was offered for each per cent. the efficiency went above 65 per cent., using Illinois coal; also an equal forfeiture for efficiency below 65 per cent. One of the eastern boiler-makers came in and made a very low bid, basing it on the anticipated bonus. In order to get high efficiency he put a very large amount of heating surface in his boiler, something over 3,500 square feet for the 300-horse-power boiler; also large grate area. The official test showed 61 per cent. efficiency, and that test was conducted by one of the leading experts from the East, with the result that the eastern boiler-maker's final estimate was $6,000 less than his bid.

Mr. Kent.—I hope that my remarks will not be misunderstood as saying that plenty of heating surface is a panacea for all the

Digitized by Google

ills of boilers. Notwithstanding what the gentleman said with regard to getting a very low efficiency out of a boiler with a very large amount of heating surface, I want to insist on the fact that when you have in the result of a boiler test a very high temperature in the chimney, and a very high rate of evaporation per square foot of heating surface, you will have low efficiency, and the necessary remedy for that state of things is to increase the amount of boilers you have; not necessarily put in some other type of boiler, but add to your boiler plant, so as to get rid of the forcing; and I entirely agree with Mr. Meier that probably the best place to put in the heating surface is beyond the boiler, in an economizer, and not in the boiler itself, because you have the condition of lower temperature in the water in the economizer which would enable the economizer to absorb the heat better than the boiler. But it cannot be too strongly insisted on in the West that there has been bad engineering in the last fifty years, in being too stingy in the amount of boilers put in.

Mr. M. L. Holman.—It is evident that there is one practical question with which Mr. Kent is not familiar, in the handling of our coals. We, of course, did not make our coal, but at the same time we must use it. Now, the thing which most affects the efficiency when it comes to a duty test is the cleaning of the fire. The boiler will show a good efficiency on a short-time test, and the eastern expert, the first time that he works with that coal, will discover that after he has run about four hours he has little or no fire left. He then starts in to clean fires, and loses the steam pressure, and the test stops. Now, the thing which operates against the high efficiencies when you come to get the final result is the amount of coal which has to go into the furnace when you are cleaning, and we have in regular work to clean about once in every four hours. That is the practical point which most affects the man who guarantees the boiler.

Mr. Kent.—Mr. Holman probably assumes that I speak as an eastern expert. In the works of Mr. Bauer, at Springfield, Ohio, I tested some coal shipped from Illinois. I tested first in Illinois, and found the worst record I ever obtained. I burned that coal very slowly, and in order to prove that the bad result was not due to the boiler, I shipped a carload of that coal to a boiler that had a record, at Mr. Bauer's works in Springfield, Ohio, and inside of an hour after we changed from firing the Hocking Valley coal to this Illinois coal, they could not run the engine, and we had

Digitized by Google

the same experience exactly that we had in Illinois. So that I appreciate the difficulties that people have in burning Illinois coal, and not the least of them is the bad way that the ash behaves, in melting, when the temperature is very high, and clogging up the grates. I reported about that coal over ten years ago to the Society. You will find an account of it in my paper, in Volume IV. of the *Transactions*.

Mr. Meier.—I want to correct Mr. Kent in regard to the additional grate area. I made some experiments on that a great many years ago. I tried to burn Illinois coal at the rate of 12½ pounds to the square foot, and the fire went out. Now, we have never got any good records for efficiency from Illinois coal with any kind of a boiler when we were burning less than 22 to 25 pounds per square foot of grate.

Mr. Kent.—It was not a question of getting an efficiency, it was a question of getting the boiler to run at all. The best record I got out of the coal was about five pounds of water per pound of coal, and it was necessary to have a large grate in order to get even that efficiency. I do not claim but that if we could have removed the ash somehow or other then we might have burned the coal 45 pounds to the square foot of grate, but it was necessary to get it down to about 12 pounds in order to get it to run at all.

Mr. Laird.—I would like to ask if the fireman who handled this coal had ever used Illinois coal before?

Mr. Kent.—He was the best fireman I ever saw.

Mr. Bryan.—I think the subject has been very well covered. The necessity for a greater ratio between heating and grate surface with our coals has impressed itself upon my mind for some time past—that is, where the draught will permit. I have not yet found a place where I have had too much draught. I may say, in answer to Mr. Taylor, that in a number of cases I have temporarily cut down the grate surface and improved the results—the efficiency. Of course, the point which Colonel Meier mentioned, the necessity for the same boiler to work at times at, say, 50 per cent. above its rated capacity, spoils all our calculations as to the best ratio of heating surface to grate surface for considerations of efficiency.

Mr. Rockwood.—I would like to ask Mr. Bryan one question with reference to the down-draught furnace—that is, has he any experience of accidents with these grates, and is their life short or long, and if any accidents, are they serious?

Digitized by Google

*Mr. Bryan.**—In the early forms we simply had no end of trouble with the flat grate, and when the risers in the rear water-box became disconnected. The remedies were found, however, and troubles nowadays can be attributed almost wholly to impure feed-water or ignorant handling. If the water is very bad the tubes will give out. Of course, occasional accidents happen, by the carelessness of the fireman in handling his slice-bar, bringing a leverage to bear upon them, and springing them in the heads. It would, perhaps, be proper to say that, where the feed-water is good and the handling is intelligent, the life of the grate is practically as long as that of any other part of the boiler. I know of a great number of plants which have never had to renew tubes.

The boiler plant of the Public Lighting Station of the city of Detroit, which Mr. Dow describes, and which most of us have visited, presents many points of interest. The combination of boiler and setting is, I believe, entirely novel. The capacity of each unit is undoubtedly great, and its economy should be high. I trust that Mr. Dow may be induced to give the Society, in due time, the results of his efficiency trials.

I seriously question the desirability of the arches which he has added, increasing, as they do, both the first cost and expense of maintenance. I see no necessity for them from any point of view. Without them the down-draught furnace will give results which are all that could be desired in efficiency and smokelessness. I do not see that anything is gained by protecting the shell from the direct action of the flame; on the contrary, circulation is always improved by localizing high temperatures. The arch prevents the shell from absorbing its share of the heat, and consequently the temperature of the discharge gases is higher. I should expect better efficiency without the arch.

The fact that Mr. Dow is able to evaporate the most water per dollar when burning a high grade of fuel is undoubtedly due to the fact that freights and handling form so large a proportion of the cost of the fuel. In St. Louis we are so close to the coal fields that it almost always pays us to burn the inferior grades.

Mr. Nagle asks why the escaping gases are not of higher temperature in the case of the Hawley test. There is undoubtedly a higher fire-box temperature, but it is reduced before discharge by the higher ratio of heating to grate surface. The low efficiency of our coals as usually burned undoubtedly results from the high

* Author's closure, under the Rules.

Digitized by Google

amount of volatile matter and low fixed carbon. This indicates that high fire-box temperatures are essential, and necessitates special forms of furnaces. The best results are secured with those furnaces in which the heating surfaces are not directly exposed to the heat of the fire-bed. Mr. Nagle's inquiries as to the highest efficiency possible are answered in my additions to the paper, on pages 794 and 795.

Since the adjournment of the Convention I have completed a series of boiler tests, which throw further light on the question of the highest efficiencies possible from water-tube boilers set with down-draught furnaces, burning our common southern Illinois coals. The trial was made on a 250-horse-power Pierpoint boiler with Hawley setting, at the Stifel Brewery, St. Louis. The coal burned was "Glen Carbon" lump, having a heat value of 10,686 B. T. U. per pound, and a percentage of ash of 14.68. The rate of combustion was 21.5 pounds per square foot grate per hour; evaporation 2.55 pounds per square foot heating surface per hour; efficiency, 78.66 per cent.; equivalent evaporation per pound coal, 8.75; temperature of flue gases, 493; draught, .27. The boiler was run at exactly its rating, the damper being adjusted as required. I agree with Mr. Nagle that forced draught is often desirable. In one case within my own experience it increased the efficiency from 46.8 per cent. to 59.55 per cent. Grate surface of proper character and area must be provided.

Mr. Kent's suggestion that more heating surface be provided hardly fits the case. Our present ratios of heating surface to rated horse-power meet all the requirements; in fact, they enable us greatly to exceed the normal ratings of the boiler. The same result can be secured by reducing the grate surface, provided, of course, the draught is good. This will give us lower flue temperatures and higher efficiencies, while still securing the full rated capacity of the boiler, and a reasonable surplus. In other words, I would reduce the rate of evaporation per square foot heating surface per hour, and increase the fuel rate per square foot grate.

Replying to Professor Carpenter's criticism of the management of the fires, I will say that the firemen were not experts, but each fireman handled over a ton of coal per hour; it was hard work, particularly for a hot July day. We could notice no difference in the skill of the two men; in fact, the efficiency secured from the common boiler is so much above the average as to show that the fires could not have been handled very badly. It must not be

Digitized by Google

forgotten, however, that the Hawley setting is less sensitive to poor firing than the common furnace. All our trials of the down-draught furnace indicate that, even though indifferently fired, it gives better results than the common furnace skilfully fired, other conditions being the same.

As to the composition of the flue gases, 5.41 per cent. of CO_2 is above the average when burning our low-grade coals with ordinary furnaces and firing. It is necessary to furnish a large surplus of air, and therefore the O and N in the flue gases run high, thus reducing the percentage of CO_2. This necessity for air surplus is not so great in the Hawley furnace, hence the relative increase of CO_2.

In further answer to Mr. Taylor, I will say that leaving the heating surface unchanged and cutting down the grate surface results in a marked reduction in the temperature of the stack gases, and an improvement in the efficiency. Such a change, however, involves a reduction in the boiler's capacity for over-work, which is not always allowable. If our boilers could be run at a uniform rate at all times, it would not be difficult to proportion the grate surface to the draught in such a way as to insure much higher efficiencies than are now common.

Digitized by Google

DCXLV.*

NEW FORMS OF FRICTION BRAKES.

BY W. F. M. GOSS, LAFAYETTE, IND.
(Member of the Society.)

THE terms "friction brake" and "absorption dynamometer" are often used interchangeably, but obviously their meaning is not the same. The purpose of a friction brake is to absorb power; that of an absorption dynamometer, to absorb and also to measure power. Thus, the mechanism which is commonly employed to check the speed of railway trains constitutes a system of friction brakes, while the so-called "Prony brake," though none the less a brake, may properly be termed an absorption dynamometer. In its ultimate analysis, every absorption dynamometer embodies the elements of a friction brake, the former term including the latter, but all friction brakes are not absorption dynamometers.

In an experimental laboratory, equipped with steam-engines and other motors, the usefulness of the several machines depends largely upon the constancy of the resistance against which they are made to work. This resistance, or load, must usually be supplied by some form of friction brake, and thus it is that apparatus of this class becomes an important factor in experimental work. The ideal brake should be capable of working under any load, from the smallest one appreciable up to the maximum for which it is designed; when set for a given load it should be able to supply it for an unlimited period, without variation; its action should not expose attendants to discomfort or danger; and, if possible, it should not be expensive either in first cost or in maintenance. The ideal absorption dynamometer must add to these attributes some reliable means by which the amount of power absorbed in a given time may be observed or automatically recorded. It is true that ideal conditions are not always necessary to satisfactory results, but, on the other

*Presented at the Detroit meeting (June, 1895) of the American Society of Mechanical Engineers, and forming part of Volume XVI. of the *Transactions*.

Digitized by Google

hand, it must be admitted that the average friction brake does not meet requirements which are both reasonable and necessary. In the laboratory at Purdue there are now fifteen brakes, which together are capable of absorbing more than a thousand horse-power. In providing these brakes, no effort has been made to avoid multiplying forms, for the brakes, as well as the machines to which they are attached, constitute pieces of apparatus for the use of students, and, other things being equal, the greater the variety the better. None of these brakes fulfils all of the ideal conditions already set forth, but it is believed that each one described possesses sufficient merit to warrant its mention.

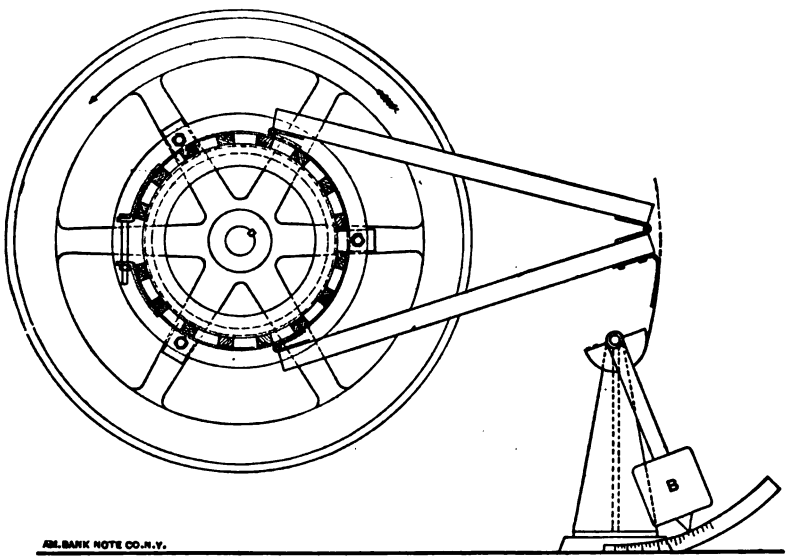

PENDULUM ABSORPTION DYNAMOMETER.

FIG. 225.

Pendulum Absorption Dynamometer.—Prony brakes of simple form often give trouble by a vibration of the arm, which interferes with accurate observations of the load. This vibration may readily be controlled by the application of a dash-pot, or, probably with less expense and much more success, by making the brake arm a pendulum, with a heavy bob at the end, after the plan of a Thurston oil tester, and so proportioning the parts that the mass of the whole is sufficient to absorb, by its inertia, the forces tending to produce vibration. So far as the writer is informed, no large brakes have ever been constructed on this

Digitized by Google

plan, but a modification of it has been carried out in the case of two 10-horse-power brakes at Purdue. One of these, the details of which were designed by Mr. Richard A. Smart, junior member of the Society, is shown by Fig. 225, attached to an Otto gas-engine. It will be seen that as the brake arm rises it displaces the pendulum B against the action of gravity, thus furnishing a load which increases with the movement of the arm. The pendulum moves freely, but does not vibrate under the action of the forces transmitted by the brake arm.

The curved scale under the pendulum bob is graduated experimentally in terms of horse-power per 100 revolutions. The

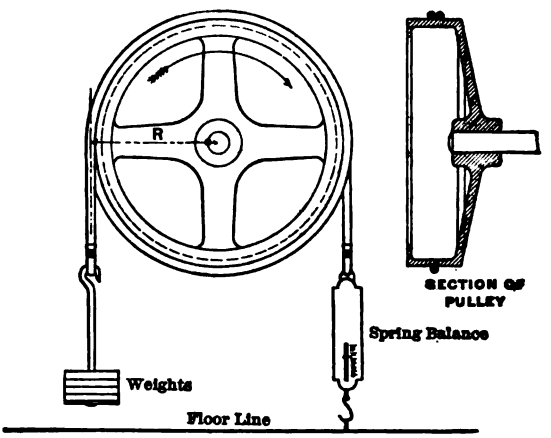

ROPE ABSORPTION DYNAMOMETER.

FIG. 226.

whole arrangement is very convenient and effective, its accuracy being all that is required for the purpose for which it is used.

Rope Absorption Dynamometer.—The fact that a wrapping of rope around a wheel will serve to absorb and to measure power is by no means new, but it is doubtful whether the great merit of the rope dynamometer is appreciated except by those who have used it, or, indeed, whether the application of the principle it embodies is generally understood.

The common arrangement of a rope dynamometer is shown in Fig. 226, which represents one of several small dynamometers in daily use at Purdue. The wheel of this brake is provided with inside flanges, between which, when running, a small quantity of water is held. A piece of manilla rope placed over or

Digitized by Google

wrapped around this wheel is attached at one end to a spring balance secured to a fixed point, and at the other end it sustains a weight. Friction being neglected, it may be assumed that, when the wheel is at rest, the reading of the spring balance on one side will be equal to the value of the weight on the other side. When the wheel is in motion, however, it tends to carry the rope around with it; the weight is then raised, and rope is fed over to the balance, reducing the tension on the latter. The condition of the rope is similar to that of a belt which is transmitting power; it has its tight side and its slack side, the former being connected with the weight and the latter connected with the spring balance. The effective brake load is the difference in stress on the two sides of the rope, and the effective radius, the distance R.* It will be seen also, that if for any reason the slack side becomes too slack, the weight on the other side will not be sustained, but will fall back, thus increasing the tension on the spring balance, which increased tension, in turn, will at once tend to restore equilibrium. By varying the number of turns of rope on the wheel, the weight on the tight side may be large, and the reading of the spring balance relatively very small, a condition which greatly favors the maintenance of a constant resistance. A rope dynamometer never sticks, and it cannot suddenly lose its grip. Its steadiness in action, and the constancy with which it maintains a given resistance, are features greatly to be desired in any brake.

In the design of the brakes which remain to be described, an effort has been made to secure the elements which give stability to the rope dynamometer; to adapt these elements to conditions where, in its simple form, the rope dynamometer would not serve; and in each case to make the whole brake a piece of apparatus possessing greater permanency. In these brakes, also, the plan usually followed, of making wooden shoes bear on an iron wheel, has been reversed, and iron bands have been made to bear on wooden wheels.

Pipe Absorption Dynamometer.—This dynamometer serves to

---

* The work done in a single revolution is $2\pi RW$, and the horse-power is $\frac{2\pi RWN}{33{,}000}$, where R is the effective radius in feet, W the effective load (weight, minus the reading of the spring balance), and N is the number of revolutions per minute.

Digitized by Google

load a 7¾-inch by 15-inch Buckeye engine, and to measure the power given off at the wheel. An elevation and partial section are shown in Fig. 227. As will be seen by reference to this figure,

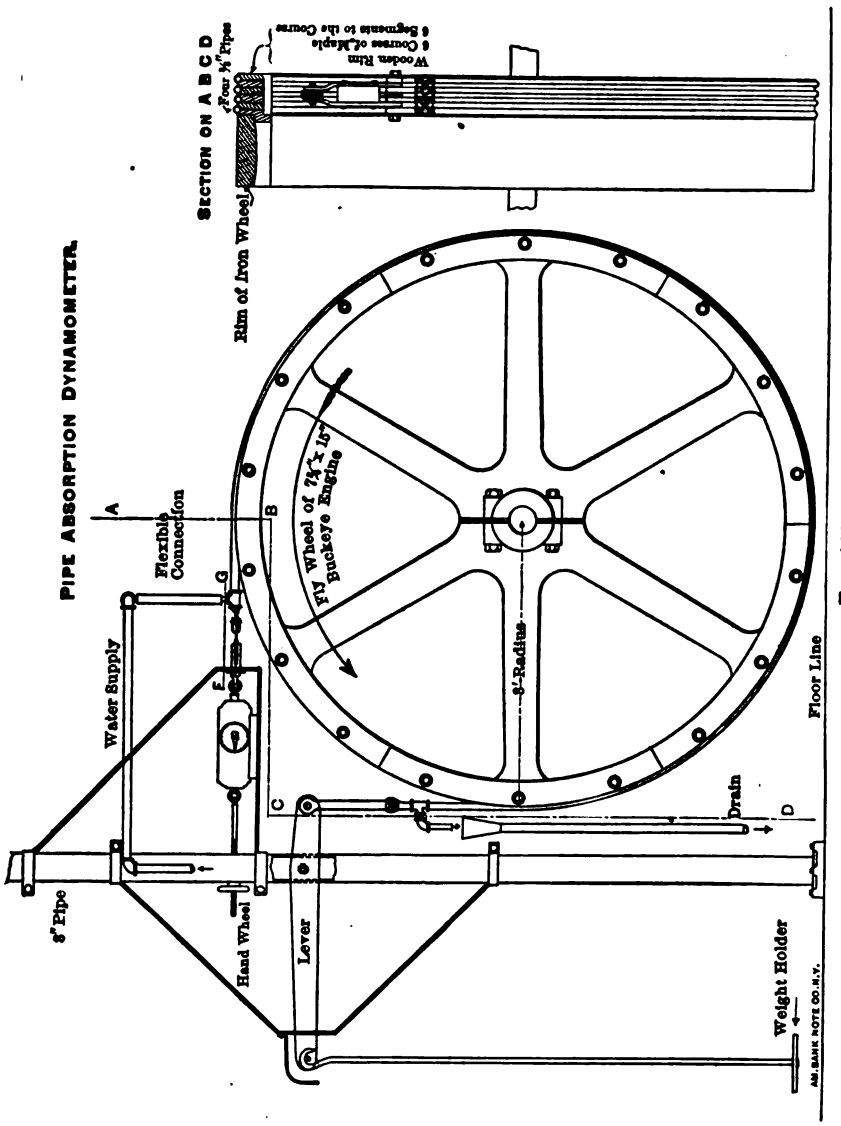

FIG. 227.

the dynamometer consists essentially of a rim of wood fastened to the side of the fly-wheel, and a brake-band composed of four pieces of common ⅜-inch steam-pipe. Each piece of pipe com-

Digitized by Google

posing the band has a tee screwed to each end, the branch opening of which provides for the circulation of cooling water through the pipe. The outer end of each tee is closed by a special plug, which is connected with the fixed members of the dynamometer.

The general principle followed is that of the rope dynamometer already described, with pieces of flexible pipe taking the place of the rope. The pipes constitute a simple form of jacketed band, and since the rubbing surfaces are of wood and iron, a high coefficient of friction is insured.

The weighing mechanism of this dynamometer is secured to a column of 3-inch gas-pipe. A lever, which has its fulcrum in the column, receives the tight side of the band at one end and carries a weight-holder at the other; the slack side of the band is connected with a spring balance sliding in a horizontal guide, this connection being arranged to equalize the tension in the several pipes. The cooling water is brought to the brake in a $\frac{3}{4}$-inch pipe, which branches over the wheel to allow a separate stream to enter each pipe. Other details are well shown by Fig. 227.

In the operation of the brake, the engine is started with the band lying loosely upon the wheel. Weights are then put upon the weight-holder, and the hand wheel, attached to the slack side, is screwed up until the lever is in balance.*

This dynamometer on a 6-foot wheel easily absorbs 40 horse-power at 150 revolutions, or 10 horse-power per pipe, and at this power there is but slight wear of the wood. The ratio of the tension of the tight side to that of the slack side, at this power, is about as 5 to 1.

The novelty of the pipe dynamometer consists in the band, which is inexpensive, but effective; it is evident that such a band may be successfully applied under a great variety of conditions.

A Belt-driven Brake, the details of which were designed by

* The work absorbed by this brake in a given time, as in the case of the rope dynamometer, is equal to the force exerted through the tight side of the band minus the force exerted through the slack side, multiplied by the space passed over as determined by the effective radius, which extends to the centre of the pipe band. The ratio of the lever arms is as 1 to 3. The horse-power therefore is

$$H.P. = 2\pi RN\left[3\left\{\begin{matrix}\text{Corrected weight}\\ \text{on weight-holder}\end{matrix}\right\} - \left\{\begin{matrix}\text{Corrected reading}\\ \text{of spring balance}\end{matrix}\right\}\right],$$

where R is the effective radius in feet, and N the number of revolutions per minute.

Digitized by Google

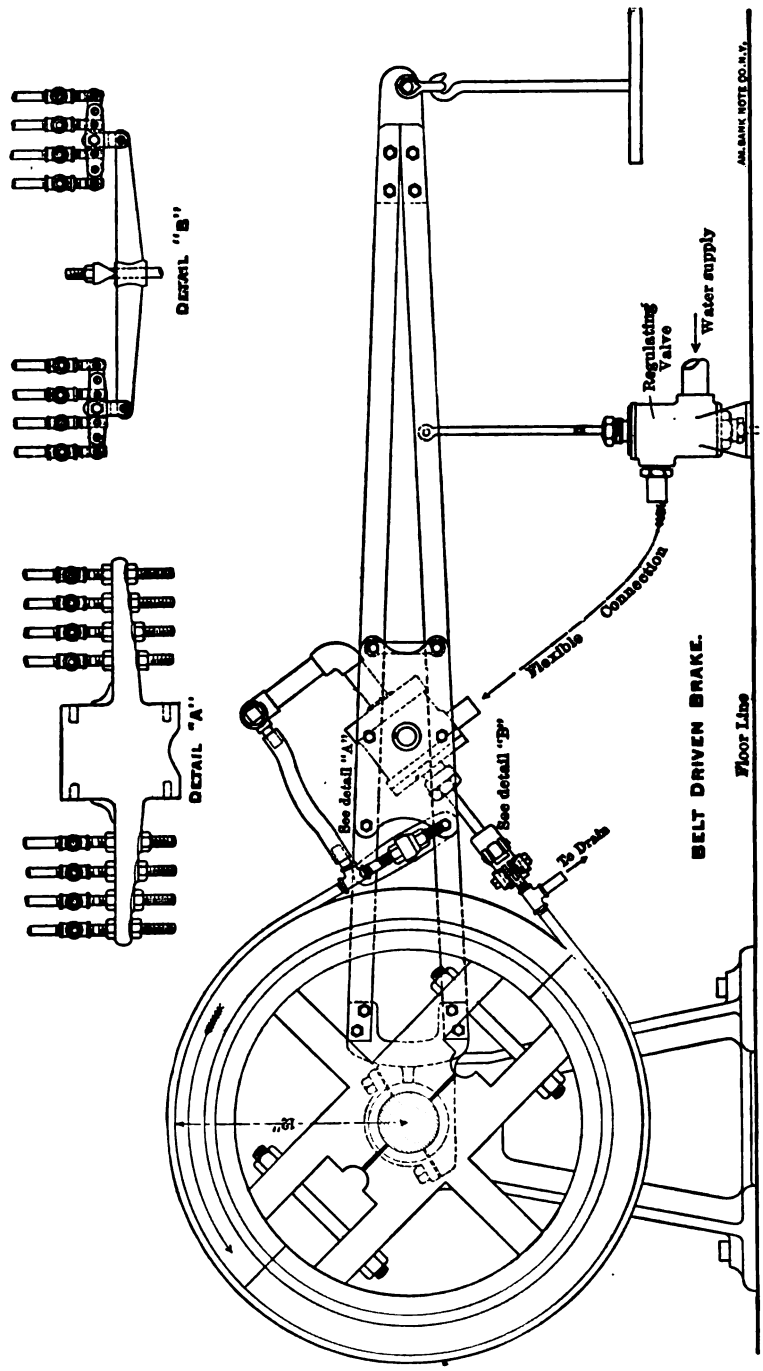

FIG. 298.

Digitized by Google

the late William H. Wells, while a graduate student at Purdue, is shown by Fig. 228. It may be described as follows: A short shaft mounted in floor-hangers carries two wooden brake wheels, and also has upon it a pulley (not shown), which receives the power that the brake is to absorb. These brake wheels are 24

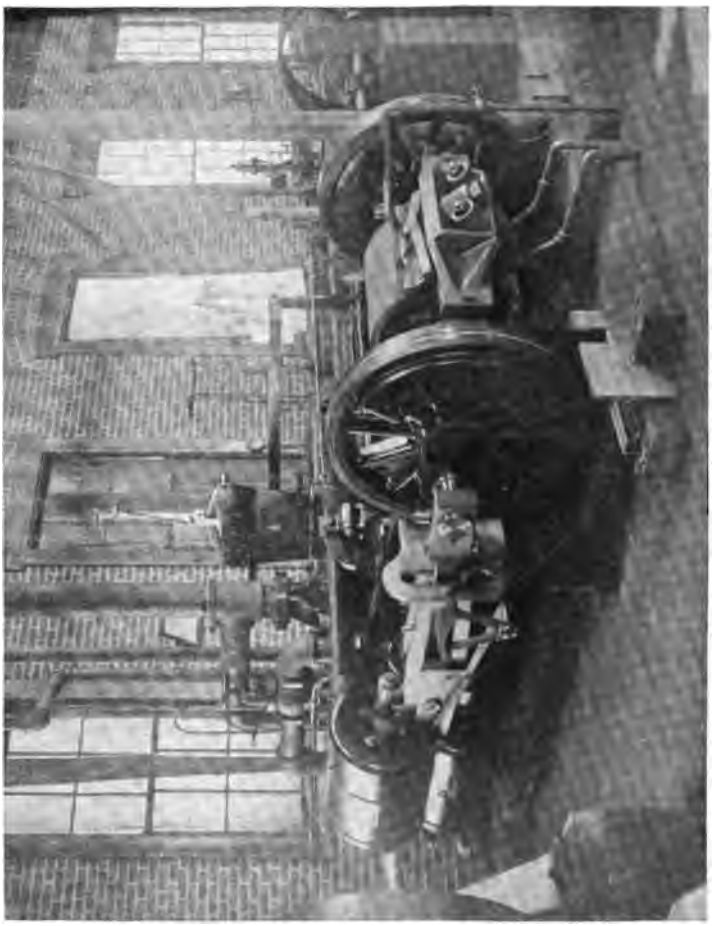

FIG. 229.

inches in diameter, and are each partially encircled by four bands of ¼-inch pipe. A suitable arm, carrying a weight-holder at its extremity, has a bearing upon the shaft between the two brake pulleys. The tight side of the band is connected directly with the arm, while the slack side is attached, through a system of equalizers, with the piston-rod of a small cylinder, which is hung by

Digitized by Google

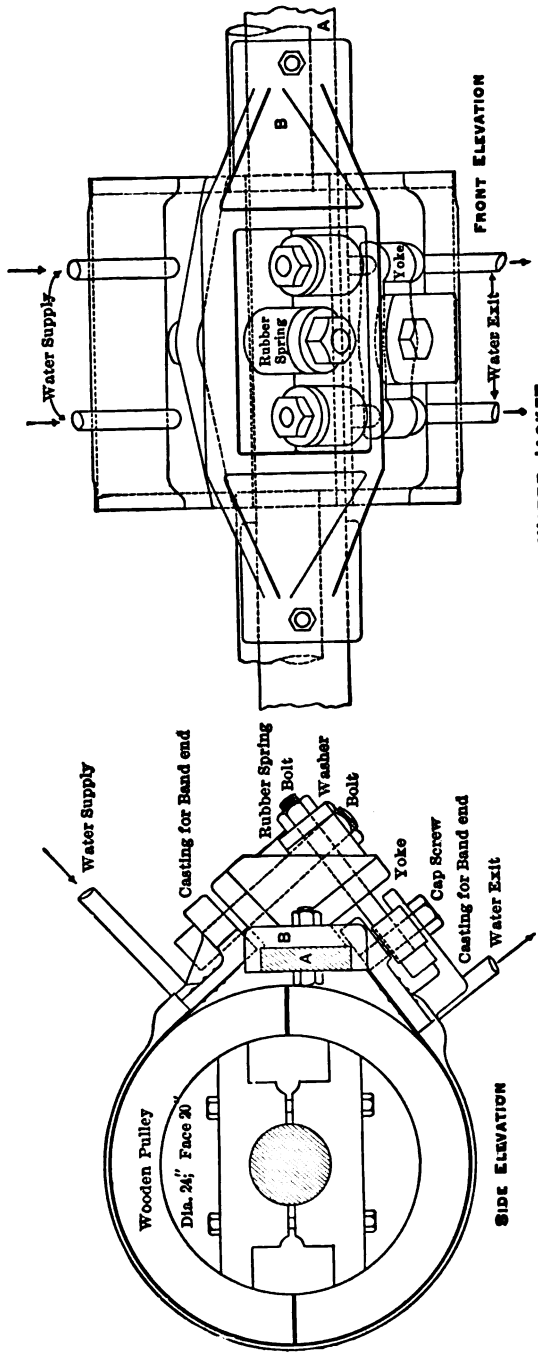

BRAKE WITH SHEET STEEL BAND AND WATER JACKET.

FIG. 230.

Digitized by Google

trunnions within the arm. Circulation of cooling water through the pipes is provided for in the same manner with that of the pipe band previously described. In the present case, however, the water before entering the band serves to regulate automatically its tension, so as to maintain the brake arm in balance.

The water enters a small balanced regulating valve actuated by the movement of the brake arm, thence it passes under pressure to the lower end of the trunnioned cylinder, where, by its action on the under side of the piston, it serves to take up the slack in the brake bands. By a small orifice in the piston the water passes from the lower to the upper end of the trunnioned cylinder, thence by piping to the brake bands, from which it finally flows in an open stream, carrying with it the heat developed by the friction of the bands. When the brake arm falls, the balanced valve opens and the pressure in the small cylinder is

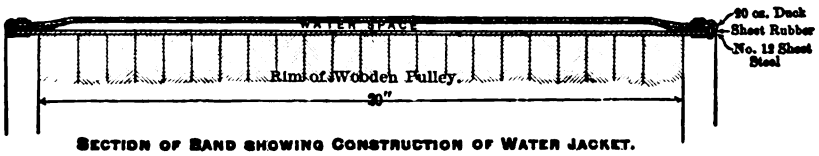

SECTION OF BAND SHOWING CONSTRUCTION OF WATER JACKET.

FIG. 231.

thereby increased. An increase of pressure in the cylinder increases the tension of the band, and this tends to again raise the arm. If, on the other hand, the arm rises above its normal position, the supply of water is reduced, the band is slackened, and the arm falls. This brake is portable, self-regulating, and has an effective water-jacket. At 300 revolutions a minute it readily absorbs 35 horse-power.

Brake with Sheet-Steel Band and Water Jacket.—While the use of pipes, as already described, gives a cheap, simple, and effective jacketed band, there are other forms which are still more simple. Fig. 229, from a photograph, shows the general arrangement of a brake as fitted to a pair of Baldwin compound locomotive engines. The apparatus consists of a jacketed band of sheet steel, working over a flat-faced pulley. It will be seen that the space which can be given to a brake in this case is limited in width by the space between the eccentrics, and the brake wheel is required to be of small diameter, in order that it may clear a cross-bar which connects the side frames. This device is a friction brake only; no provision has been made for measuring the

Digitized by Google

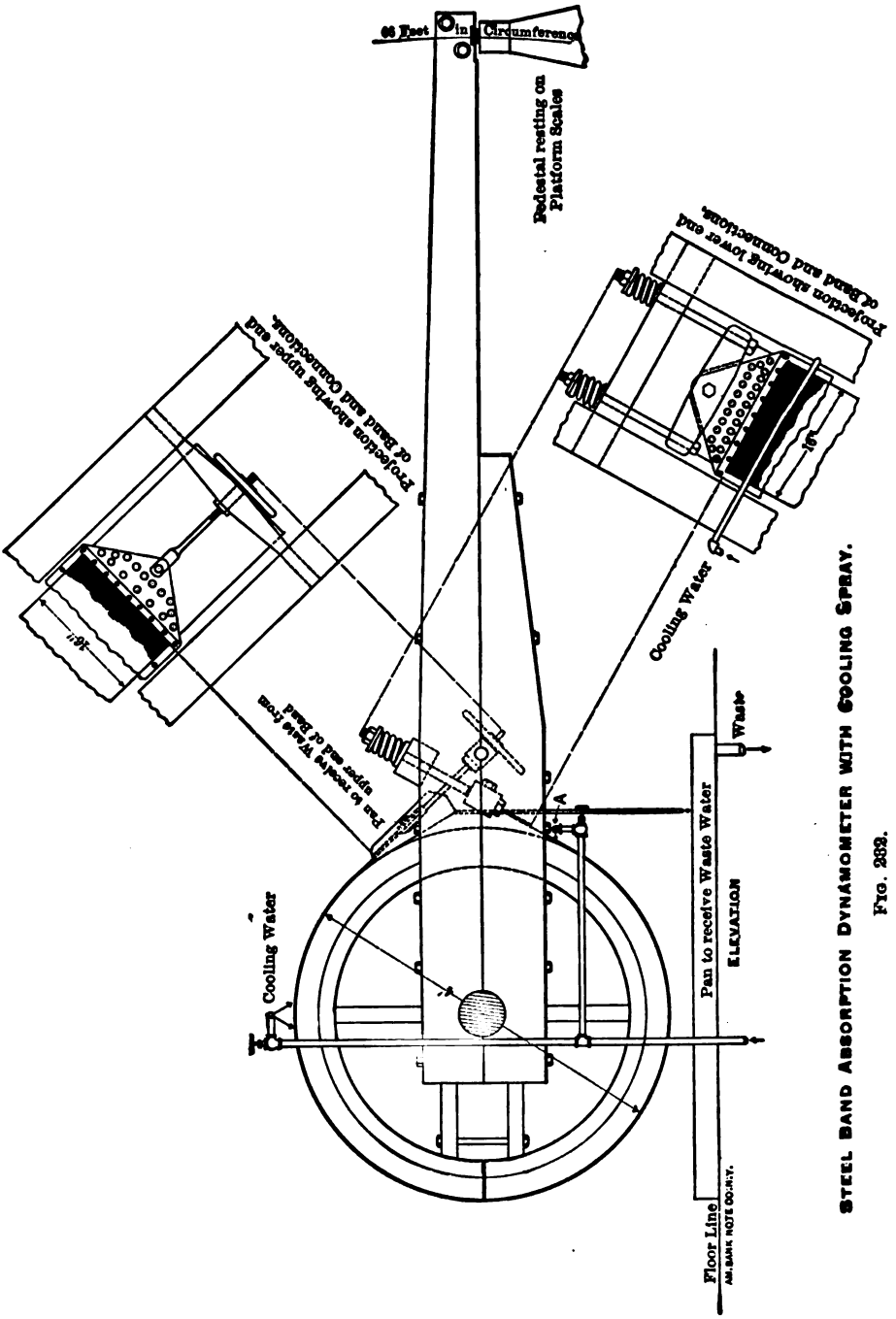

STEEL BAND ABSORPTION DYNAMOMETER WITH COOLING SPRAY.

FIG. 232.

Digitized by Google

amount of power absorbed. Two views of the brake are shown by Fig. 230.

The brake wheel consists of a heavy split wooden pulley, 24 inches in diameter and 20 inches face. Its band is of No. 12 sheet steel, and is wider than the brake wheel; riveted over it, and serving as a jacket, is a layer of rubber packing backed with a covering of stout canvas. A cross-section of the jacket is shown by Fig. 231. The steel band is riveted to cast-iron end pieces; these are tapped for pipe connections for the jacket, and receive bolts by which the band is secured (Fig. 230).

This construction provides, at very small cost, a jacketed band which is strong, tight, and flexible.

The cross-brace, *A*, already referred to as limiting the size of the brake wheel, is reënforced by the flanged casting *B*, and made to serve as the fixed point for the brake. The band connects with the casting *B* through the intervention of rubber springs, as shown (Fig. 230). When the engine is run "over," the two outside springs receive the stress transmitted by the tight side of the band, the middle spring serving only to maintain the tension of the slack side. When the engine is run "under," these conditions are reversed. The rubber springs allow but slight movement of the band, but give to the brake all the steadiness which characterizes the action of the rope dynamometer, of which, indeed, it is a type.

Steel Brake Band, with Spray.—Fig. 232 shows an absorption dynamometer which serves to load, in part, a triple-expansion Corliss engine. The brake wheel is a heavy split wooden pulley, 4 feet in diameter and 16 inches face. A double lever arm has bearings on the shaft on either side of the wheel, and receives the ends of the brake band. The band consists of a piece of sheet steel, to the back of which is secured a layer of iron-wire netting. Water is sprayed upon the band over the top of the wheel and at a point close under the brake arm at *A*. The spray is received into the interstices in the netting, and, by capillary action, is held in contact with the band which is to be cooled; the water flows in an even film over the top of the band to its under side, from which point it drops off into a pan and is drained away. A cross-section of this band is shown by Fig. 233. No water reaches the brake wheel, and the band being practically always at rest, there is no throwing of water. If too little water is used steam rises from the band; otherwise, the

Digitized by Google

presence of the open jacket is not noticeable. There is no annoyance from the open stream of water, in the manipulation of the brake or of the engine to which it is attached.

While the performance of this brake leaves very little to be desired, its great merit is to be found in its inexpensiveness.

Alden Brakes.—This paper would be incomplete did it not contain some reference to the Alden brakes at Purdue, a complete description of which was published in the *Transactions* of the Society for 1892.* At the time of the publication referred to, however, but little was known concerning their action, whereas they have now had three years of service.

Purdue's Alden brakes, four in number, are rated at 200 horse-power each, but they have been worked at higher power. Two of them have served as a load for the locomotive during

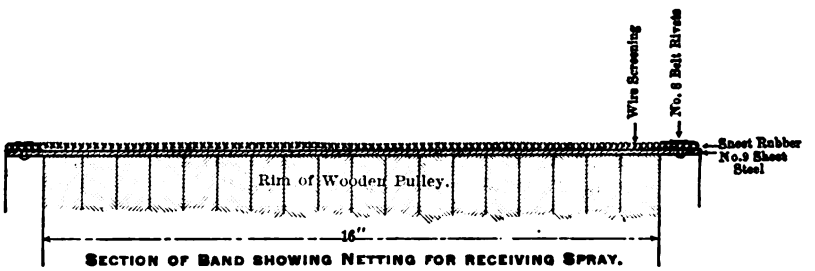

SECTION OF BAND SHOWING NETTING FOR RECEIVING SPRAY.

FIG. 238.

1,500,000 revolutions, which are equivalent to a distance of 5,000 miles. The other two have had about half this service. Each brake consists of a cast-iron disk 56 inches in diameter, revolving between two fixed copper plates. The space between the copper plates which is not taken by the moving disk is filled with cylinder oil, and provision is made for the circulation of the oil from the circumference to the centre of the brake; this provides for the lubrication of the rubbing surfaces. The load is regulated by water, which circulates behind the copper plates, and serves the double purpose of carrying away the heat developed and of maintaining a pressure of contact between the plates and the moving disk.

Concerning the working of these brakes, it may be said that they are frequently run at speeds as high as 300 revolutions, which speed, together with their large diameter, gives a high

* "An Experimental Locomotive," vol. xiii. See also "An Automatic Absorption Dynamometer," vol. xi., *Transactions* of the Society.

Digitized by Google

velocity to the surfaces in contact. The water pressure seldom exceeds 15 pounds per square inch, which is slight compared with the ordinary pressure of bearings. There is no wear of either the copper plates or the cast-iron disk, for it is evident that while the friction is nominally between the cast-iron and the copper surfaces, the work is chiefly done upon the oil. Experience has shown, also, that, within limits, the power absorbed depends quite as much upon the temperature of the oil as upon the water pressure. Thus, if the volume of cooling water passing the brake is increased, without increasing its pressure, the temperature of the brake is lowered, the oil becomes more viscous, and the resistance offered by the brake is increased. Within limits, better results are obtained by regulating the temperature than by regulating the pressure.

These brakes furnish, for hours at a time, a resistance which is marvellously constant, and their whole action is very nearly perfect.

DISCUSSION.

Mr. George I. Rockwood.—I would like to ask Professor Goss if there is any brake illustrated which is not also a dynamometer.

Professor Goss.—The brake which I have described as being used in connection with the Baldwin compound engine will not, in its present form, serve for measuring power. It is a friction brake only. The Alden brakes also, which are referred to in the paper, constitute a part of a somewhat complex plant; they serve to absorb power, the value of which is determined by means of apparatus which is entirely apart from the brakes.

Mr. Rockwood.—I asked that question because one might gather that the Alden brake could not be a dynamometer, and I merely want to correct that impression, and to say that Alden brakes are used as dynamometers, although it may be possible that the brakes under the Purdue locomotives are not dynamometers.

Prof. D. S. Jacobus.—We have found the rope brake very efficient and steady, under quite large, as well as under small, loads. A short time ago we had occasion to make a trial of an engine as it stood on the testing-block in the shop where it was manufactured, and we had to provide a brake which would absorb 125 horse-power when placed on a 72-inch fly-wheel running at 150 revolutions per minute. The brake was constructed as shown in Fig. 234. The frame, *E*, is made of such a size that the two up-

Digitized by Google

right pieces pass each side of the fly-wheel, *A*. This frame stands on a pair of platform scales, *F*. At the lower portion of the frame there is a cross-piece which holds the lower ends of the two ropes. The ropes pass around the wheel, and the upper ends are spliced so as to pass over a pair of hooks at the end of the screw, *D*. The screw, *D*, is moved up and down by means of the hand-wheel, *C*. By tightening the hand-wheel, *C*, any desired tension can be produced in the rope, and the amount of friction regulated. The difference in tension which the friction produces in the ropes is

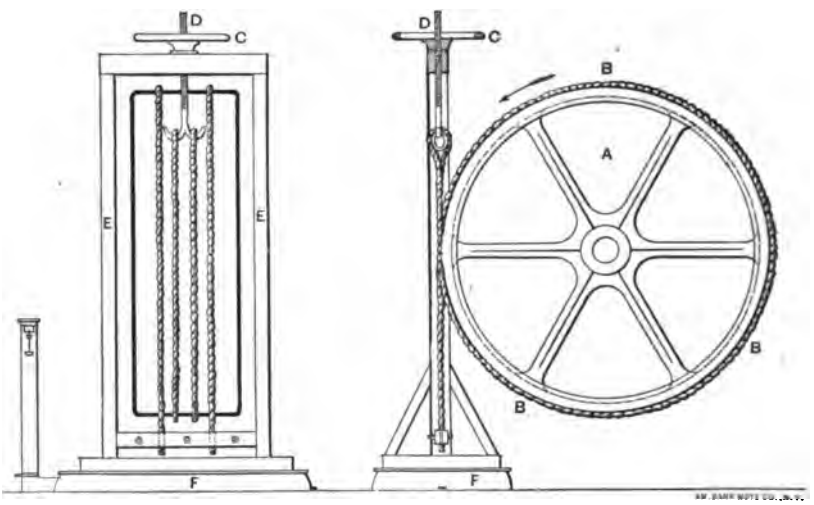

FIG. 284.

measured by the increase of the load which bears on the platform scales.

In this particular case we ran one test of six, and another of three and one-half hours, and made a number of shorter runs, and had no trouble with the brake.

The inside of the rim of the fly-wheel was cast with two flanges, so there was a hollow space. This space was filled with water, which was held in by centrifugal force. The water gradually boiled away, and the loss from this cause was made up by continuously adding a fresh supply. In this particular case, with 120 to 150 horse-power, we had to add a little water on the outside of the wheel to prevent the rope from charring, whereas, in general, this is not necessary. The rim of the fly-wheel in this case was nearly 5 inches thick, so that the transmission of heat was proba-

Digitized by Google

bly considerably retarded. We have used the rope dynamometer in the test of a steam turbine in which the driving pulley ran at 1,550 revolutions per minute, and in that particular case we also had to put a little water on the outside of the wheel.

The rope brake runs very steadily, and we find it thoroughly reliable and convenient for use in temporary work. It was experimented with, and described in the *Stevens Indicator*, by Professor Denton, about six years ago, and we have used it in a great variety of work since that time.

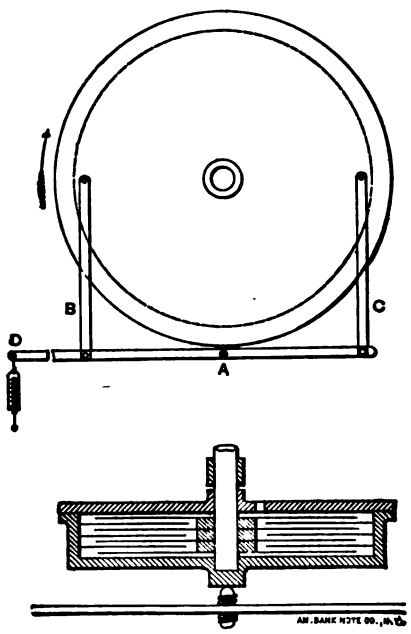

FIG. 235.

Another form of dynamometer is shown in Fig. 235. This was designed by Mr. F. M. Leavitt, to be used on a Whitehead torpedo, where there was less than 30 seconds in which to record the whole operation, and there was about 20 to 45 horse-power to absorb and measure. An ordinary brake could not be adjusted to give reliable readings in so short a time, so that a special form was designed, in accordance with the suggestions of Professors Webb and Denton, in which all the power was absorbed by the friction of the water. The brake was constructed as follows:

Four steel disks, 24 inches diameter, and about $\frac{1}{8}$ of an inch in

Digitized by Google

thickness, were fastened to a vertical shaft. These disks were made to revolve in a cast-iron cylindrical box, to which was attached 3 steel disks, so that they came between the 4 disks on the shaft without touching them. The space for water between the disks was about $\frac{1}{16}$ of an inch. The hub at the centre was 5 inches in diameter. Water was poured in through a hole in the top of the cast-iron box, the cover of which was made perfectly tight. The engines ran at from about 600 to about 1,200 revolutions per minute.

The advantage of this brake is that it can be calibrated so that every pound exerted at the end of the lever arm corresponds to a certain horse-power. The amount of resistance varies as the square of the revolutions. Hence, if we determine the pull on the scale at *D*, and the horse-power for any given number of revolutions, we can calculate the horse-power corresponding to any given force at *D*.

The brake was, therefore, capable of indicating the horse-power, second by second, during the short interval of time which the engine ran, without requiring a determination of the speed. Mr. Leavitt made a number of tests, which proved that the moment of resistance varied as the square of the revolutions for a range in the number of revolutions which existed in his experiments, and constructed a formula for calculating the horse-power from the weight indicated at the end of the lever arm, without regard to the number of revolutions.

Mr. Whitney.—I would like to ask in what direction the rope Prony-brake wheel revolves?

Professor Jacobus.—The wheel revolves in the direction of the arrow. If we wish to revolve the wheel in the other direction, and are unable to set the frame on the other side of the wheel, so that the force exerted by the friction will bear downward on it, a weight can be placed on the lower part of the frame, and arranged with safety catches, so that if the brake is made too tight it will not lift the weight. The diminution of the weight registered on the scales then gives the force to be used in calculating the horse-power. In the case of most engines, however, there is room enough to place the frame at either side of the fly-wheel.

Mr. Whitney.—You said in one case there was an automatic feature, and in the other there was not.

Professor Jacobus.—I do not see what you mean by an auto-

Digitized by Google

matic feature. There is nothing more than a direct tension between the hooks at the end of the screw, *D*, and the cross-piece which holds the lower ends of the two ropes. Therefore, no matter which way the wheel runs there is virtually the same action, if the weight of the rope is not considered. The effect of the weight of the rope is small, because it has to be strained up very tight in order to produce the necessary friction. It might be asked why the screw *D* is placed at the top, where it is subjected to the greatest tension, instead of at the bottom. The reason is, that in most cases it is more readily handled when above than it would be if placed below.

Mr. Whitney.—I think a screw at the lower end would have a decided difference.

Professor Jacobus.—There would be a difference in the amount of force exerted on the screw, but there would be no difference in the readings of horse-power. It would require a less force if placed below than it would if placed above. Another reason for placing the screw above is that, should the rope tend to grip on the wheel, it would produce more effect in some cases to loosen the tight end than it would to diminish the strain on the loose end. I doubt, however, whether this effect would enter strongly, because in one case we ran a brake with the tightening-wheel on the slack end of the rope.

Mr. Kent.—How do you increase the load on the Leavitt dynamometer?

Professor Jacobus.—It could be adjusted by placing various amounts of water in the cylindrical box.

Mr. Kent.—Is it a constant load?

Professor Jacobus.—No, it is a dynamometer in which the moment increases as the square of the revolutions. Therefore, the weight registered at the end of the lever arm indicates directly what the horse-power is, without counting the revolutions.

Mr. Angus.—Didn't you have trouble with the rope dynamometer when you used water on the outside?

Professor Jacobus.—No, there was no trouble whatever.

Mr. Kent.—Was the rope greased?

Professor Jacobus.—There was no grease on the rope. The rope, after being run for about eighteen hours in one position, wore flat where it bore on the wheel, and the reading of the scale fluctuated more than at the beginning of the test. If the

Digitized by Google

rope were run long enough in one position it might, therefore, wear so flat that it would produce trouble by gripping the wheel. On turning the rope over the excessive fluctuations were eliminated.

Mr. E. J. Willis.—For the last two years I have used the rope-brake to which Professor Jacobus has called attention. All our self-contained engines are thus tested before leaving the works. It is cheap, reliable, and, above all, quickly adjusted to different diameters of pulleys. It is especially convenient for going out on a test, as it is portable, and, in case of emergency, one can generally be built on the spot. The usual mistake is to use a rope too small, which wears out much quicker than a large one. I have taken 80 horse-power for six hours off a 42-inch pulley with a brake of this character, without the slightest trouble with the brake.

Professor Jacobus.—I will add one thing, to show how steadily a rope-brake can be worked. When we finished the regular tests, we blocked the governor and opened the throttle gradually until the brake registered 145 horse-power, and then ran constantly at this figure. The brake was adjusted by a party who was guided by a tachometer attached to the engine, and the variation between the greatest and least number of revolutions per minute, as registered by a box counter, which was read every two or three minutes, was three revolutions per minute.

Mr. Henning.—Does the liquid pressure in the Leavitt brake increase the friction?

Professor Jacobus.—The friction of water has never been considered to vary with pressure. The coefficient of friction which corresponds to Mr. Leavitt's experiments is 0.0012, which is about one-third of the ordinary figure. In the case in question we have a thin layer of water, whereas in the ordinary experiments on the friction of water a plane surface is drawn through a large tank of water, so that the two factors may not be the same. The above coefficient might be employed in calculating the approximate size of the brake, after which it could be adjusted to the particular load by placing various amounts of water in the cylindrical box.

The following formula, by which the moment of resistance produced by the brake can be calculated, is based on Mr. Leavitt's experiments:

$$M = 0.145\ DN^2\ (R^4_1 - R^4_2).$$

Digitized by Google

In which,

M = moment produced by brake in foot-pounds.
D = number of revolving disks.
N = number of revolutions per second.
R_1 = radius of disks, in feet.
R_2 = radius of hub, in feet.

*Professor Goss.**—It has been suggested that my reference to the Alden brake may be misleading, that I have failed to state that the principle of the Alden brake may be made to serve in a dynamometer. It is but proper that I state, in explanation, that the paper is a description of certain new brakes and dynamometers. The reference to the Alden brake is incidental; it is a statement concerning the performance of apparatus, a description of which has already been given to the Society. This fact will account for the brevity of the present reference. It is to be noted, also, that the paper calls attention to Professor Alden's description of his "Automatic Absorption Dynamometer," which I had hoped would serve to prevent impressions of the kind referred to.

I would add that we have at Purdue an Alden automatic absorption dynamometer, which has been in use for several years. I have never found anything that equals it in maintaining a constant load. Its automatic regulation is perfect.

With reference to the use of water in connection with rope dynamometers, I would say that we have taken 8 horse-power from an 8-inch wheel, running 2,500 revolutions a minute, and on another occasion, 50 horse-power from a 48-inch wheel, running 175 revolutions, the cooling being accomplished in both cases, for several hours in succession, by the use of water on the rope. When water is used in this way it is desirable that it be supplied at a constant rate, since it not only cools, but lubricates, the brake, and any change in the quantity supplied necessitates an adjustment in the tension of the rope.

The President.—May I ask you does your paper state what sized pipe you used, and of what material your pipe was?

Professor Goss.—The diameters are given. We have used quarter-inch and three-eighths-inch common steam-pipe. The diameter must be small in comparison with that of the wheel upon which the pipe is to work, otherwise it will not be sufficiently flexible. It is necessary, also, that the pipe be rolled or very carefully bent to the required curvature. A short kink will so localize the

* Author's closure, under the Rules.

Digitized by Google

pressure of the band on the wheel as to cause the latter to wear away rapidly, while, if the band is once carefully formed, there is no trouble whatever.

Wooden brake-wheels, whether for pipe or for sheet-steel bands, should present an unbroken surface to the band. In our early experiments we used a split pulley, which, after being bolted up, presented an open joint across the face. The joint was not over a sixteenth of an inch in width, and nothing was thought of it at the time. But after running a heavy load on the brake for four or five hours, we had fire in the joint. It is evident that fine, highly heated particles of dust or wood found lodgement in the joint, and these, being beyond the cooling influence of the band, communicated their heat to the wood with which they were in contact. The defect was remedied by closing the joint with wedges dipped in glue and well driven in. Nail-holes were plugged in the same way, and every fault in the face of the pulley corrected. After that there was no trouble with fire.

We have found, also, that all wooden wheels should be well filled with heavy oil or grease.

Digitized by Google

DCXLVI.*

PIPE-COVERING TESTS.

BY GEORGE M. BRILL, SYRACUSE, N. Y.
(Junior Member of the Society.)

DATA may be found in several of the engineers' handbooks upon the condensation of steam in pipes covered with various materials, due to the radiation of heat into the surrounding air. Perhaps many of the materials mentioned in such tables were practicable enough at the time the experiments were made, when steam pressures were but a fraction of those carried now; but even the elaborate series reported in our own volumes of *Transactions*† might need revision to-day with the present requirements of pipe-coverings. Much of such data results from trials of small pipes and short lengths, and there is more or less given without a word of explanation regarding the conditions under which they were taken, making its value questionable. Also the wide range of materials, and the complicated mixtures used at present, prevent the making of any accurate deductions, even with full data concerning the values of the well-known non-conducting materials.

Reports of results obtained from tests of pipe-coverings may be had from any maker or dealer in this line of goods. But while each list may show comparisons of practically the same coverings, the special covering sold by any dealer invariably stands at the head, is said to be from 20 per cent. to 50 per cent. better than any others, and statements are made to show that the coverings sold by competitors are scarcely worthy of consideration or comparison. With such directly conflicting and contradictory data, little or no dependence can be placed upon many of the results published in this manner, and one is at a loss to know which is the most efficient and economical, if not possessed

* Presented at the Detroit meeting (June, 1895) of the American Society of Mechanical Engineers, and forming part of Volume XVI. of the *Transactions*.

† *Transactions of the American Society of Mechanical Engineers*, Vol. II., EMERY, p. 34, No. 21; Vols. V. and VI., ORDWAY, No. 135, No. 145, No. 164.

Digitized by Google

of some experience in the use of various coverings, or a knowledge of the materials forming their composition, and their relative non-conducting values.

In view of these facts, it was decided by the Solvay Process Company to make a series of tests of pipe-coverings, and determine the relative non-conducting values, compare original costs, saving due to covering, cost to apply, and from their physical

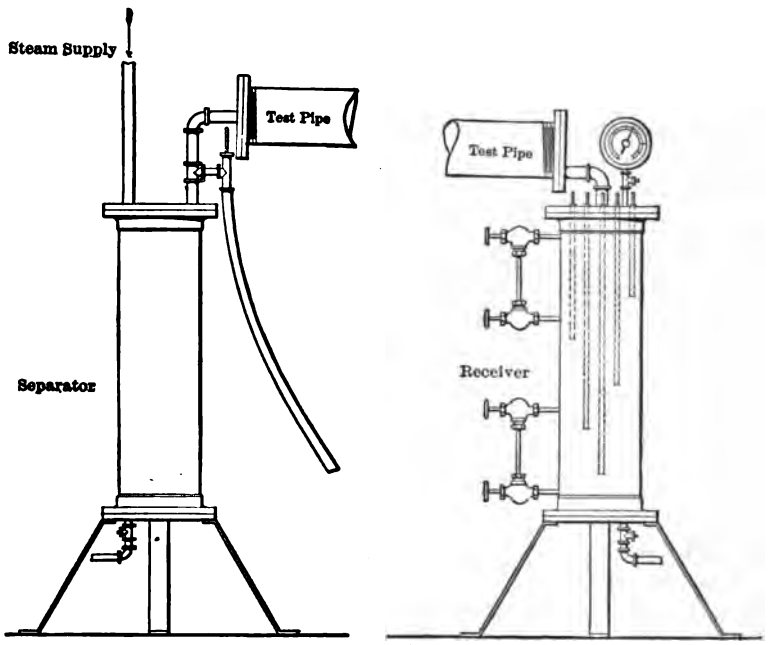

ARRANGEMENT OF APPARATUS FOR PIPE COVERING TESTS.

FIG. 236.

and chemical compositions form some idea of durability, and, taking all the features into consideration, determine for ourselves which is the most economical for general use.

For the purposes of these tests about 60 feet of standard 8-inch wrought-iron pipe, coupled together in order to make it smooth and regular, was suspended where it could not be subjected to currents of air (Fig. 236). In order to get the steam as dry as possible it was sent through a separator on its way to the test-pipe, and in the short connection between the separator and the pipe was placed a throttling calorimeter. The test-pipe had an inclination of 1 foot in its entire length, which

Digitized by Google

insured drainage of all the water of condensation to the lower end, at which point the receiver was connected, and into which the water gravitated as rapidly as formed. The water was measured in this receiver, which consisted of 4 feet of 12-inch pipe, with graduated water-glasses attached near the top and bottom. The same volume of water was allowed to collect each time, was measured under the steam pressure, and blown from the receiver at the end of the run. A careful determination was made of the amount of water collected, by weighing the same volume while cold, and correcting for difference in weight due to the difference in temperature for the respective runs.

These tests were made upon a scale large enough—in fact, upon a pipe of the size and length which is very common in the average power plant—with sufficient care, and in a manner to insure accuracy in the results obtained, and are consequently of some interest and value to all users of steam—the interests of the user, not the maker of pipe-covering, being of first importance in these tests.

The method of testing was to place a covering upon the body of the pipe in a workmanlike manner; put steam pressure upon the pipe for some time before commencing a run, thus being certain that the covering was thoroughly warmed, or dried, if put on wet; allow sufficient water to be formed to show at the zero mark on the receiver water-glass, and note time of beginning the run. As the steam was condensed and collected in the receiver readings were taken at regular intervals of the temperatures in the room and calorimeter; the steam pressure was recorded on a Bristol gauge and checked by a test gauge; the temperature of the water in the receiver at the end of the run was obtained from 5 thermometers in ½-inch pipes of different lengths, reaching down from the top flange, so placed as to give the temperatures at 5 different points in the water. The run was ended and time noted when the water had risen 30 inches in the receiver. The same method was followed in the case of every covering tested. Three runs were made with each—more, if for any reason there was a marked difference in the period of time required to fill the receiver; thus each kind of covering was given the same opportunity to show its merits. The log gives the actual figures as obtained, and Fig. 236 shows the arrangement of piping and connections.

As stated above, the body of the pipe was covered with vari-

Digitized by Google

ous materials; the flanges at the ends, the receiver, and the connections between the separator and the test-pipe and between the pipe and the receiver were not covered. After finishing the tests of the coverings and the bare pipe the flanges were removed from the test-pipe, and without changing any of the connections to them they were bolted together, and pressure was thus put upon the connections, and through them and the flanges upon the receiver. The rate of condensation was thus determined for all the uncovered portions of the system, and formed a correction for the various runs, after determining the pounds of dry steam condensed per degree difference in temperature per minute.

The slight variations in the steam pressures, room temperatures, and qualities of steam are all taken into consideration in working up the data, so that results are finally given upon a basis which enables direct comparisons to be made.

The following coverings were tested in the forms as usually applied to 8-inch pipe. Hair Felt was tried, not only alone, but over another covering, to determine the saving due to the combination, and whether advisable to use it in this manner.

NAME.	SOLD BY
Magnesia	Keasbey & Mattison, Ambler, Pa.
Rock Wool	New York Fire Proof Covering Co., New York.
Mineral Wool	Seacord & Dodson, Batavia, N. Y.
Asbestos Fire Felt	H. W. Johns Mfg. Co., New York.
Manville Sectional	Manville Covering Co., Milwaukee, Wis.
Manville Wool Cement	" " " " "
Hair Felt	H. W. Miller & Sons, Philadelphia, Pa.
Champion Mineral Wool	Chicago Fire Proof Covering Co., Chicago, Ill.
Riley Cement	Riley Brothers, Troy, N. Y.
Fossil Meal	Fossil Meal Co., New York.

In the log is given, under Steam, gauge pressure, temperature in degrees Fahr., and quality, as shown by the calorimeter; under Temperature, the temperature of the air surrounding the pipe and the temperature of the water in the receiver at the end of the run; Length of Runs in Minutes; under Pounds of Steam, the weight of the water actually collected in the receiver, and the same corrected for moisture, as shown by the respective calorimeter determinations. The average data obtained during each run is given, and also the average of the runs. In working out the results the latter only are used.

Digitized by Google

LOG.

Kind of Covering.	Steam.			Temp.		Length Run.	Pounds of Steam.	
	Press.	Temp.	Qual.	Air.	Water.		Wet.	Dry.
Bare Pipe.....	111	344.7	97.8	75	322.7	50	109.26	106.86
	112	345.3	97.8	75	321.3	54	109.36	106.95
	110	344.0	97.6	77	322.7	50	109.26	106.64
	109	343.5	97.7	75	321.8	52	109.32	106.81
Average.....	110.5	344.5	97.7	75.5	322.3	51.5	109.30	106.79
Magnesia.....	110	344.1	97.5	66	260.6	231	112.79	109.97
	110	344.1	97.5	70	258.3	236	112.94	110.11
	110	344.1	96.6	68	259.7	228	112.83	108.99
Average.....	110	344.1	97.2	66.3	258 8	231.7	112.85	109.69
Rock Wool.....	110	344.1	97.8	68	249.8	290	113.37	110.88
	110	344.1	97.4	68	250.3	286	113.35	110.40
	110	344.1	96.7	68	251.6	280	113.27	109.53
Average.....	110	344.1	97.3	68	250.7	285.3	113.33	110.27
Mineral Wool....	110	344.1	96.8	50	254.7	257	113.12	109.50
	110	344.1	96.5	64	252.5	273	113.23	109.26
	110	344.1	97.0	61	253.9	264	113.19	109.79
Average.....	110	344.1	96.8	58.3	253.8	264.7	113.17	109.53
Fire Felt.....	111	344.7	97.4	79	264.2	203	112.56	109.63
	111	344.7	97.6	79	263.5	207	112.65	109 95
	111	344.7	97.4	79	263.7	205	112.61	109.68
Average.....	111	344.7	97.5	79	263.7	205	112.61	109.79
Manville Sect....	113	345.8	97.3	79	255.2	255	113.10	110 05
	113	345.9	97.3	75	255.2	255	113.10	110.05
	112	345.3	97.2	81	255.6	254	113.04	109.87
Average.. ..	112.3	345.5	97.3	78.3	255.2	254.7	113.08	110.03
Manv. Sect. and	115	347.1	97.5	78	244.4	330	113.70	110.86
Hair Felt.....	110	344.1	97.4	70	245.	320	113.72	110.76
	109	343.5	97.3	78	246.2	316	113.74	110.67
Average.....	111.3	344.9	97.4	72	245.5	322	113.72	110.76
Manv. Wool Cem't.	109	343.5	97.1	81	254.3	262	113.15	109.87
	109	343.5	97.1	81	254.7	260	113.10	109.82
	110	344.1	97.1	81	254.7	260	113.10	109.82
Average.....	109.03	343.7	97.1	81	254.5	260.7	113.12	109.84
Champ. Min. Wool	114	346.5	96.7	75	254.3	262	113.15	109.43
	112	345.3	96.7	73	254.3	262	113.15	109.43
	114	346.5	96.1	75	254.1	263	113.15	108.74
Average.....	113.3	346.1	96.5	74.3	254.3	262.3	113.15	109.19
Hair Felt.....	119	349.5	97.7	68	261.9	217	112.69	110.10
	117	348.3	97.9	70	261.9	216	112.69	110 32
	113	347.1	97.0	69	261.0	220	112.75	109.37
Average.....	117	348.3	97.5	69	261.7	217.7	112.71	109.89
Riley Cement....	117	348.3	97.3	75	299.3	118	110.63	107.63
	117	348.3	97.4	75	296.6	126	110.74	107.88
	115	347.1	97.5	73	296 2	127	110.79	108.02
Average.....	116.3	347.9	97.4	74.3	297.1	125.7	110.72	107.84
Fossil Meal.....	116	347.7	97.5	72	295.2	131	110.85	108.08
	117	348.5	97.6	77	294.4	133	110.91	108.24
	112	345.3	97.6	77	293.5	135	110.91	108.24
Average.....	115	347.1	97.6	75.3	294.4	133	110.89	108.19
Receiver and Connections.....	116	347.7	97.5	72.5	222.8	573	114.89	112.09

Digitized by Google

Referring to the data obtained from the trial of the receiver and connections it is seen that 112.09 pounds of dry steam were condensed during the run of 573 minutes, which gives .1956 pounds dry steam per minute, and .00071075 pounds of dry steam condensed, due to the receiver and connections per degree difference in temperature per minute. Multiplying this by the average difference in temperature of the steam and surrounding air in each case, and this by the duration of the corresponding run in minutes, gives the pounds of dry steam condensed by the receiver and connections during the various trials. The pounds of steam condensed during the runs, corrected by these amounts, gives the dry steam actually condensed by the radiation of heat through the coverings. Table A shows these results.

TABLE A.

Kinds of Covering.	Dif. in Temperature of Steam and Air.	Length of Run.	Dry Steam, Condensed. Pounds. Average of Runs.			
			By Receiver and Connections.	Total.	By Radiation Through Covering.	Per Hour Through Covered Pipe.
Bare Pipe	268.8	51.5	9.84	106.79	96.95	112.951
Magnesia	277.8	231.7	45.75	109.69	63.94	16.558
Rock Wool	281.1	285.3	57.00	110.27	53.27	11.2·3
Mineral Wool	285.8	264.7	53.77	109.50	55.73	12.632
Fire Felt	265.7	205.0	38.90	109.79	70.89	20.748
Manville Sectional	267.2	254.7	48.37	110.03	61.66	14.525
Manville Sectional and Hair Felt	272.9	322.0	62.46	110.76	48.30	9.000
Manville Wool Cement	262.7	260.7	48.18	109.84	61.16	14.076
Champion Mineral Wool	271.8	262.3	50.67	109.19	58.52	13.386
Hair Felt	279.3	217.7	43.22	109.89	66.67	18.375
Riley Cement	273.6	123.7	24.05	107.84	83.79	40.641
Fossil Meal	271.8	133.0	25.69	108.19	82.50	37.218

Table B shows (1) the pounds of steam condensed per square foot of pipe surface per hour through the coverings as tested, with the slightly differing steam pressures and qualities, and room temperatures; (2) British thermal units lost per hour per square foot of pipe surface; (3) the same, per degree difference in temperature. Having reached a basis upon which to make comparisons, shows (4) the British thermal units lost per hour per square foot of pipe for the *average* differences in temperature of steam and

Digitized by Google

room; (5) the pounds of steam condensed per hour per square foot of pipe. The last three columns and all the results following are directly comparable.*

TABLE B.

Kinds of Covering.	Pounds Steam Con. per Sq. ft. per Hour. Actual.	B. T. U. Transmitted per Hour.			Pounds Steam Cond'sed per Sq. Ft. per Hour. Average.
		Sq. Ft. of Pipe. Act. Conds.	Sq. Ft. of Pipe per Deg. Dif. in Temp.	Per Sq. Ft. Pipe. Avg. Conds.	
Bare Pipe	.8342	727.339	2.7059	736.546	.8458
Magnesia	.1223	106.609	.3838	104.470	.1200
Rock Wool	.0827	72.090	.2556	69.819	.0802
Mineral Wool	.0933	81.330	.2846	77.468	.0890
Fire Felt	.1532	133.468	.5023	136.726	.1570
Manville Sectional	.1073	93.415	.3496	95.161	.1093
Manville Sectional and Hair Felt.	.0664	57.841	.2119	57.679	.0662
Manville Wool Cement	.1039	90.580	.3448	93.855	.1078
Champion Mineral Wool	.0989	86.063	.3166	86.179	.0990
Hair Felt	.1357	117.869	.4220	114.868	.1319
Riley Cement	.3001	260.757	.9531	259.434	.2979
Fossil Meal	.2747	238.824	.8787	239.182	.2747

From the last two columns in Table B are derived the results shown in the first two columns of Table C; the third column follows directly from the second. From the third, the savings due to the various coverings per 100 square feet of surface per year, can be obtained the saving in dollars and cents for any price of coal and cost of firing, having the evaporative power of the coal. Using $2.44 as the price of coal, and adding 12 per cent. for cost of firing, and 7 pounds of water per pound of coal as an evaporative figure, derive the results shown in column four. To give a definite idea of the meaning of 100 square feet of surface, have appended, in column five, the lengths of the different sizes of pipe, with a surface equivalent to 100 square feet.

* The pipe was 59 feet 11.6 inches long when hot; circumference, 27.096 inches; the exterior surface was therefore 135.4 square feet. Average pressure of steam, 112 pounds; average difference in temperature of steam and room, 272.2 degrees Fahr.; average latent heat, 870.8 degrees Fahr.; thickness of pipe, .84 inches.

Digitized by Google

TABLE C.

Kinds of Covering.	Savings Due to Coverings.				No. ft. pipe to 100 sq. ft.	
	Per Hr. per sq. ft. pipe.		Per 100 sq. ft. per Year.			
	B. T. U.	Lbs. Steam.	Lbs. Steam.	$	Feet.	Size.
Magnesia	681.986	.7258	635,801	110.82	290.5	1 ins.
Rock Wool	666.637	.7656	670,666	116.90	160.8	2
Mineral Wool	658.988	.7568	662,957	115.55	109.5	3
Fire Felt	599.730	.6388	603,389	105.17	84.9	4
Manville Sectional	641.295	.7365	645,174	112.45	68.7	5
Manv. Sect. and Hair Felt	678.777	.7796	682,930	119.03	57.7	6
Manville Wool Cement	642.601	.7380	646,488	112.68	44.3	8
Champion Min. Wool	650.277	.7468	654,197	114.03	35.5	10
Hair Felt	621.588	.7139	625,376	109.00	29.9	12
Riley Cement	477.022	.5479	479,960	83.66	25.5	14
Fossil Meal	497.274	.5711	500,284	87.20	22.5	16

The next table, D, shows the ratio of heat lost through the bare pipe to that lost through the covered pipe, the horse-power lost both per 100 square feet of surface and per 60 feet of 8-inch pipe, and the thicknesses of the coverings, as determined while on the pipe by calipering in numerous places, both in a vertical and horizontal direction.

TABLE D.

Kinds of Covering.	Ratios of heat lost, Bare to Covered Pipe.	H. P. lost through Coverings at 30 lbs. water per H. P. per hour.		Thickness of Covering.
		100 sq. ft.	60 ft. 8-in. Pipe.	Inches.
Bare Pipe	100	2.819	3.820	
Magnesia	14.18%	.400	.542	1.25
Rock Wool	9.48	.267	.362	1.60
Mineral Wool	10.52	.297	.402	1.30
Fire Felt	18.56	.523	.709	1.30
Manville Sectional	12.92	.564	.494	1.70
Manv. Sect. and Hair Felt	7.83	.221	.299	2.40
Manville Wool Cement	12.74	.359	.487	2.20
Champion Min. Wool	11.70	.330	.447	1.44
Hair Felt	15.60	.439	.596	.82
Riley Cement	35.22	.993	1.345	.75
Fossil Meal	32.47	.916	1.232	.75

Digitized by Google

The savings shown in columns three and four of Table C are per year and per 100 square feet, that unit being used, since it is a convenient figure for a basis from which to obtain the savings for any surface. In Table E the surface which we had in the actual case tried, practically 60 feet of 8-inch pipe, is used for a basis, as a record was kept of the cost of applying this amount of each kind of covering. Probably these figures would hold true per unit of length for the same size of pipe, and they should not vary much per square foot of surface for any size of pipe. All the coverings were not applied by the same men, but men were selected, as far as practicable, who were best qualified to do the work.

The cost prices of the different makes are shown in the table, also cost applied.

TABLE E.

Kinds of Covering.	Cost to apply 60 ft. of Covering.	Cost of 60 ft. of Covering.	Cost of 60 ft. Applied.	Gross saving in one year due to 60 ft. of Covering.
Magnesia..	$1.92	$31.95	$33.87	$150.14
Rock Wool	2.02	27.60	29.62	158.38
Mineral Wool	2.34	21.00	23.34	156.55
Fire Felt	2.10	29.70	31.80	142.48
Manville Sectional	3.21	29.35	32.56	152.35
Manv. Sect. and Hair Felt	5.96	34.60	40.56	161.26
Manville Wool Cement	17.06	25.50	42.56	152.66
Champion Min. Wool	2.85	16.02	18.87	154.49
Hair Felt	3.00	10.50	13.50	147.67
Riley Cement	20.00	8.71	28.71	113.34
Fossil Meal	12.75	21.45	34.20	118.14

From the costs of covering applied and the gross savings due to the coverings we have sought to derive some absolute comparison of economies due to the use of the various coverings. To divide the savings for one year by the cost applied gives the saving per year in dollars for one dollar invested, or to divide the cost applied by the saving for one year gives the percentage of one year necessary for the covering to pay for itself. While these figures are of some interest they are deceptive, and for that reason not given. They are deceptive in that the first cost would thus be used as if of equal importance with the efficiency of the covering, which in reality is not the case; some of the coverings which have a low first cost and low efficiency would

Digitized by Google

thus stand as high in dollars saved per dollar invested as a much better covering which happened to cost proportionately more. The first cost is to be paid but once, after which there is but the interest to be met, and perhaps something for repairs, while the efficiency of the covering, be it high or low, has a continual effect during its life and good repair. We have, therefore, made a table showing the net saving due to the coverings, in which for the first year the net saving, as obtained from the tests (using for the cost of coal $2.44, and adding 12 per cent. of the cost of the coal to include labor, with 7 pounds of dry steam evaporated per pound of coal burned), which is the saving shown in Table E, minus the cost of the covering applied to the pipe. For the succeeding years the saving would be once, twice, thrice, etc., the gross saving, added to this. Figures are given in Table F for seven years, and a graphical representation of them is appended (Fig. 237), as is also a representation of the saving in pounds of dry steam per year per 100 square feet of surface due to the different coverings in which no account is taken of the costs (Fig. 238).

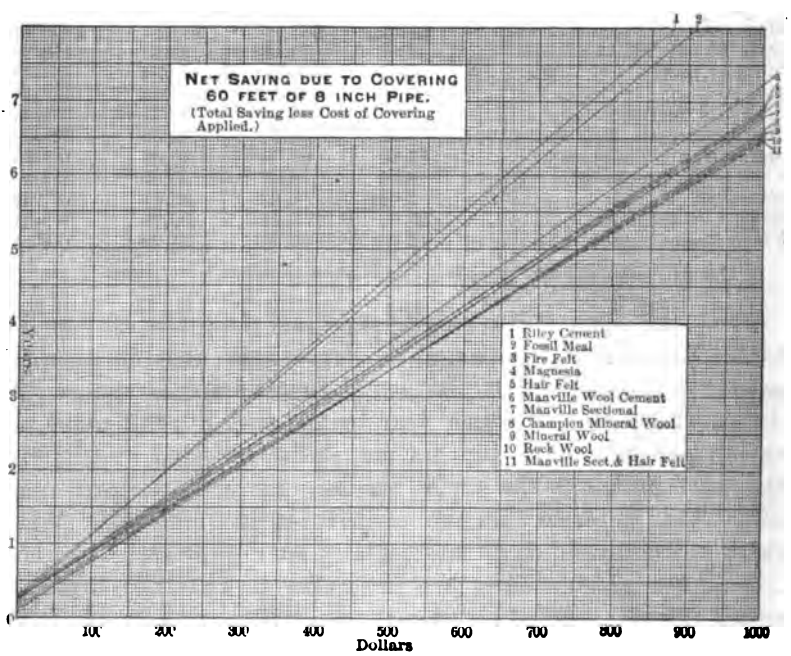

FIG. 237.

Digitized by Google

TABLE F.

NET SAVING DUE TO COVERING FOR SUCCESSIVE YEARS.

	1	2	3	4	5	6	7
	$	$	$	$	$	$	$
Magnesia	116.27	266.41	416.55	566.69	716.83	866.97	1017.11
Rock Wool	128.76	287.14	445.52	603.90	762.28	920.66	1079.04
Mineral Wool	133.21	289.76	446.31	602.86	759.41	915.96	1072.51
Fire Felt	110.68	253.16	395.64	538.12	680.60	823.08	965.56
Manville Sectional	119.79	272.14	424.49	576.84	729.19	881.54	1033.89
Manv. Sect. & Hair Felt.	120.70	281.96	443.22	604.48	765.74	927.00	1088.26
Manv. Wool Cement	110.10	262.76	415.42	568.08	720.74	873.40	1026.06
Champ. Min. Wool	135.62	290.11	444.60	599.09	753.58	908.07	1062.56
Hair Felt	134.17	281.84	429.51	577.18	724.85	873.52	1020.19
Riley Cement	84.63	197.97	311.31	420.65	537.99	651.33	764.67
Fossil Meal	88.94	202.08	320.22	438.36	556.50	674.64	792.78

Of course it is understood that these figures are made with the assumption that the coverings would remain in good condition. This leads to the consideration of durability, concerning which it is difficult to make any definite determinations

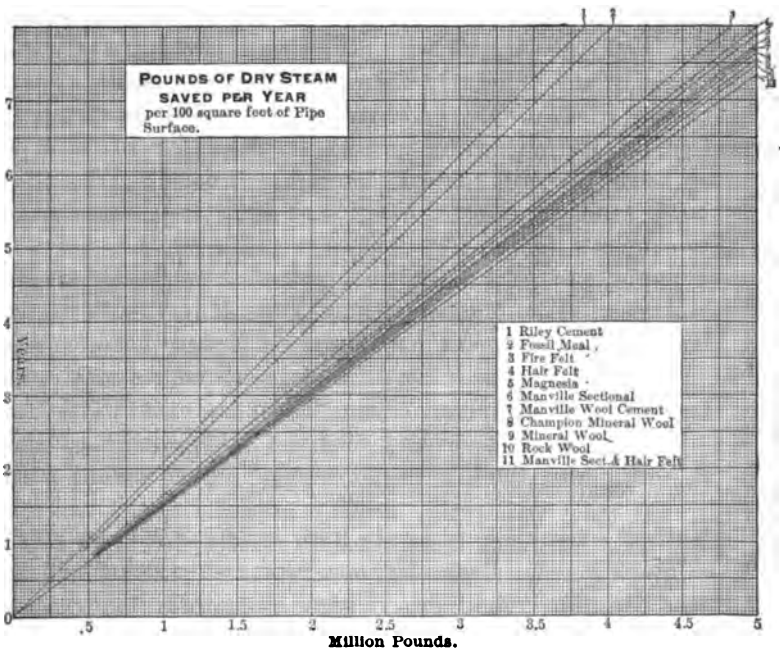

FIG. 238.

Digitized by Google

showing relative values, as so many elements must be considered. We could determine the action of high temperature for a short period, but in practice the element of time enters, and brings not only heat but cold; that is, changes of temperature, and the consequent contractions and expansions, moisture, vibrations (which alone are extremely injurious), acids and alkalies, all working against the life and efficiency of any covering. It is largely due to their physical composition that some are more durable than others; the effects of chemical composition and of the physical composition to some extent, together with the thickness, are involved in the non-conducting properties.

Before commenting on the meaning of the figures in Table F it may be well to say a few words descriptive of the coverings, in order that their make-up may be understood, if not already familiar, and remarks concerning their apparent relative durabilities have more meaning. The Magnesia, Rock Wool, both makes of Mineral Wool, Fire Felt, and Manville Sectional came in sections ready for use upon an 8-inch pipe; the Hair Felt came in squares, and was cut to the proper width to wrap about the pipe without lap; the Manville Wool Cement (in two layers); the Riley Cement and the Fossil Meal came in a loose condition, and were mixed with water and applied while wet. In the cases of the Magnesia, Fire Felt, Manville Sectional, the combination of Manville Sectional and Hair Felt, Manville Wool Cement, Riley Cement, and Fossil Meal the body of the covering came directly against the pipe, while with the Rock Wool, both kinds of Mineral Wool, and Hair Felt there was a lining of asbestos paper beneath them, about as thick as ordinary blotting-paper, except the last, under which it was perhaps twice that thickness. The Magnesia, Fire Felt, Manville Sectional, and Manville Wool Cement had simply a jacket of canvas surrounding them, while the Rock Wool and both makes of Mineral Wool had a similar jacket with straw board under it. The Hair Felt, both when used alone and over the other covering, Riley Cement, and Fossil Meal were surrounded by no jacket whatever.

We noticed a tendency to sag in both makes of Mineral Wool and the Rock Wool. From the nature of the material and the way it was necessarily made up, in what amounts to two concentric tubes, it is difficult to prevent its sagging and getting in a bad and inefficient condition. For even if applied more securely

Digitized by Google

than the needs of our work required, when it was left upon the pipe but a short time, there is little to prevent the wool from gradually working to the under side of the pipe, thus leaving but the thickness of the tubes to cover the upper portion, where, to be most efficient, the covering should be, if anything, a trifle thicker than on the under side. This action would surely be rapid and disintegration certain where any vibrations exist. Our experience leads us to think there is but little difference in the durability of Riley Cement and Fossil Meal, and would class neither among the most durable; but upon that list would place the remaining ones, Magnesia, Fire Felt, Manville Sectional, and Manville Wool Cement, with little, if any, choice as to arrangement. The durability of Hair Felt is questionable, and depends largely upon the temperature to which it is subjected, and how thoroughly it can be protected from moisture. It would certainly need to be thoroughly covered and painted so as not to absorb moisture from the outside and thus become matted and soggy. It would be necessary to line it well with some non-combustible material to make it most efficient and durable.

Referring to the chart made from the figures showing the savings in dollars and cents for the successive years (Fig. 237), the values of the different coverings are readily seen when under consideration as non-conductors. Assuming a first-class covering to have a life of at least five years, we see at the five-year line they stand in saving value in the following order: Manville Sectional and Hair Felt, Rock Wool, Mineral Wool, Champion Mineral Wool, Manville Sectional, Manville Wool Cement, Hair Felt, Magnesia, Fire Felt, Fossil Meal, and Riley Cement. This same order holds good at the end of six years, except that Hair Felt and Manville Wool Cement are then practically the same, and beyond which they change places. However, lack of durability would doubtless exclude Rock Wool and the Mineral Wools from this list long before five years had passed. We think they might be made more durable by quilting the wool, or some similar process, using asbestos fibre or another non-combustible material. If we drop those just mentioned from the list as lacking durability, Riley Cement and Fossil Meal because of evident inefficiency, and the questionable Hair Felt, there remains the combination of Hair Felt over another good covering, which seems desirable unless the increased thickness makes it too clumsy; Manville Sectional, Manville Wool Cement,

Digitized by Google

Magnesia, and Fire Felt. With no data regarding durability to offset the results obtained from the tests for non-conducting values, they arrange themselves in the order just given.

The specific gravity and weight per lineal foot are shown in Table G, and the analyses in Table H.

TABLE G.

	Sp. Gr.	Wt. per Ft.
Magnesia	.215	3.63
Rock Wool	.248	5.53
Mineral Wool	.194	3.42
Fire Felt	.284	4.99
Manville Sectional	.378	9.04
Manville Sectional and Hair Felt	.290	12.38
Manville Wool Cement	.471	15.28
Champion Mineral Wool	.266	5.25
Hair Felt	.207	2.06
Riley Cement	1.515	14.50
Fossil Meal	.575	5.50

TABLE H.

The approximate composition or material of which the covering is made is first given, then the analysis of each, with the acids and bases separate, it being impossible in some cases to state the exact combination between bases and acids present.

Magnesia	Asbestos, Calcium, and Magnesium carbonates.
Rock Wool	Mineral Wool.
Mineral Wool	Mineral Wool.
Fire Felt	Asbestos.
Manville Sectional:	
Inside	Asbestos and Calcium sulphate.
Outside	Paper and a little Silica.
Manville Wool Cement:	
Inside	Rag fibre and Silicates.
Outside	Short wool, Vegetable fibre, and Silica.
Hair Felt	Coarse hair.
Champion Mineral Wool	Mineral Wool.
Riley Cement	Vegetable fibre and lime.
Fossil Meal	Hair and Silica.

Digitized by Google

The complete analysis of each covering is as follows:

	Magnesia.	Rock Wool.	Mineral Wool.	Fire Felt.
Moisture at 100° C.	6.62	.00	.00	.16
Organic Matter	7.74	.00	.00	11.00
Silica	5.43	43.48	48.62	38.18
Iron and Alumina Oxides	2.55	11.95	9.29	9.56
Lime (CaO)	2.47	22.96	24.19	.10
Magnesia (MgO)	41.18	18.24	17.26	37.55
Carbonic Acid (CO_2)	32.40	.00	.00	.00
Sulphurous Acid (SO_3)	2.05	4.67	1.75	3.60

	Manville Sectional.		Manville Wool Cement.	
	Inside.	Outside.	Inside.	Outside.
Moisture at 100° C.	4.00	3.63	3.60	4.07
Organic Matter	2.75	88.54	17.51	89.80
Silica	21.14	3.74	43.70	50.68
Iron and Alumina Oxides	2.21	1.04	12.40	2.81
Lime (CaO)	27.67	1.96	10.90	1.01
Magnesia (MgO)	1.55	.09	5.25	.12
Carbonic Acid (CO_2)	.00	.56	.00	.00
Sulphurous Acid (SO_3)	40.68	.57	8.96	.00

	Hair Felt.	Champ Min. Wool.	Riley Cement.	Fossil. Mea.
Moisture at 100° C.	5.55	.07	.90	1.78
Organic Matter	90.85	.00	80.10	10.02
Silica	.11	35.92	7.95	85.48
Iron and Alumina Oxides	.28	22.17	4.07	1.78
Lime (CaO)	2.33	41.86	50.56	.52
Magnesia (MgO)	.21	2.98	.05	.15
Carbonic Acid (CO_2)	3.75	.00	.00	.00
Sulphurous Acid (SO_3)	.00	.00	.00	.00

One feature which the results of these tests emphasize is the small differences between the savings effected by the coverings. Using the results as shown on the diagram of pounds of dry steam saved per year, and representing the best covering arbitrarily by 100, the others have the following relative values:

Digitized by Google

Manville Sectional and Hair Felt	100.
Rock Wool	98.20
Mineral Wool	97.07
Champion Mineral Wool	95.79
Manville Wool Cement	94.66
Manville Sectional	94.47
Magnesia	93.10
Hair Felt	91.57
Fire Felt	88.85
Fossil Meal	78.26
Riley Cement	70.28

The results obtained from these tests show conclusively that there are no such differences in the efficiency of these coverings as non-conductors as have been frequently stated in advertising literature.

It is not in the scope of this paper to determine or state the effects of the chemical components of the different coverings upon the pipe covered. The presence of sulphur in the best coverings, and its recognized injurious effects,* makes it imperative that moisture must be kept from the coverings, for if present, it will surely combine with the sulphur, thus making it active. This could be stated in other words, *Keep the pipes and covering in good repair.* Much of the inefficiency of coverings is due to the lack of attention given them; they are often seen hanging loosely from the pipe which they are supposed to protect. The writer is thoroughly convinced that all coverings should be looked after at least once a year, and given necessary repairs, refitted to the pipe, the spaces due to shrinkage taken up, for little can be expected from the best non-conductors if they are allowed to become saturated with water, or if air currents are permitted to circulate between them and the pipe. It would be interesting to know what chemical composition is most efficient, but the varying thicknesses in which the coverings tested are sold prevent any definite conclusions in that direction from this test, which in its intents is but a commercial one. The writer hopes that the chemical analyses given may lead to some discussion as to the effects of the presence of the components upon the pipe covered when moisture is present. Recognizing in this subject a large field for a further investigation of interest, he is at present, at least, obliged to leave it as a commercial test, hoping as such it may prove to be of some general interest and value.

* See *Transactions* A. S. M. E., vol. iii., HUTTON, No. 72.

Digitized by Google

DISCUSSION.

Mr. A. F. Nagle.—I wish to express my grateful appreciation of the value of the experimental data given in this paper. There are, however, a few omissions, which the author no doubt can supply, and I trust he will add to his paper before final publication.

It is said that the experimental pipe (60 feet in length) "was suspended where it could not be subjected to currents of air." Is this literally true? If the air was not changed it would have increased in temperature during the test, unless the room was of very great magnitude. I therefore ask, What was the size of the room in which the pipe was suspended? In what part of the room was the pipe located? And where was the thermometer located which gave the readings recorded in the paper? Was the location of the thermometer such as to make it free from the *radiated* heat of the pipe?

What was the temperature of the outside atmosphere at the time of the tests?

Air currents seriously affect the rate of condensation in pipes, and, while the author states there were none, the different results obtained indicate that there must have been air currents. Look, for example, at the four tests made on the bare pipe. The first test was made in 50 minutes, and the second in 54 minutes, a difference of 8 per cent. in time, and yet substantially the same weight of steam was condensed during the two tests. I give the author credit for careful work, and hence I see nothing in the data contained in the table which would account for such discrepancy of time except *outside conditions*. If the outside conditions had been the same, and it is so given in the table, the second test should have given 115.41 pounds of dry steam condensed instead of 106.95 pounds.

A careful examination of the table will show these discrepancies to exist throughout, and they can be accounted for only upon the supposition I have named.

In the experimental apparatus, the author provided five thermometers for ascertaining the exact temperatures of the condensed water at five different depths of the receiving tank. Will he kindly give those readings, as he has thus far given only the average results?

Digitized by Google

Quality of Steam.

What was the size of the steam-pipe supplying the 8-inch test-pipe? If it were 1-inch, then the velocity of the steam in said 1-inch pipe, when the bare pipe was tested, was only about 23 feet per second, and when the rock wool was under trial the velocity was only about 2.20 feet per second, and yet in each case the quality of the steam is given at about 97.8 per cent. of being dry.

Throughout the trials the quality of steam is given almost invariably at about 97.6 per cent., regardless of the velocity of the steam, and after passing through a settling chamber or separator. This does not appear to be reasonable, and perhaps Mr. Barrus, or some other expert in steam calorimetry, can explain this phenomenon.

I will, however, suggest this myself: Was not the pipe so large in comparison with the supply-pipe to the test-pipe that the velocity created in the supply-pipe during the calorimeter test was so great as to actually produce wet steam, so that when the calorimeter was shut off, dry steam was really furnished to the test-pipe? Usually calorimeter pipes are taken out of large pipes, and hence the velocity produced in them by the flow to the calorimeter is small; but in this case that proportion does not seem to exist, and hence I am inclined to think an error has crept in.

Mr. F. W. Taylor.—I have read Mr. Brill's paper with a great deal of interest, and feel that he has made a valuable contribution to the literature on pipe covering. His tests, so far as they have been described, seem to have been impartially made, and they are on a sufficiently large scale to eliminate many errors which are liable to occur with similar experiments, which partake more of the nature of laboratory work. The thorough manner in which the results of the test are worked up is especially to be commended. Most of us engineers are either so lazy or so busy that unless the subject is one of great importance, and is placed before us very clearly, and in exactly the form in which we wish to use it, we are apt to do some pretty tall guessing instead of doing the few hours of figuring required to properly use much data which is valuable, but not thoroughly worked out. Mr. Brill has, however, thoroughly worked up the subject from so many different points of view that it seems as if his paper should be extensively referred to in the future.

While the exact saving in dollars and cents per year through the

Digitized by Google

use of different styles of pipe covering is a matter of much interest, still, the question which is most frequently asked is not, How much can I save through the use of pipe covering? but, What is, on the whole, the best covering to adopt?

On this point Mr. Brill has, I think, arrived at the same conclusion as Professor Ordway, who made a very thorough and exhaustive course of tests some years ago, for the Massachusetts Institute of Technology, namely, that hair felt, when put on the outside of another pipe covering, so as to be properly protected from close contact with the steam-pipe, is the best non-conductor and the cheapest covering to use in the long run. In arriving at a determination of which is the best covering to use, however, I think the chief consideration, after narrowing down to the coverings that are really efficient non-conductors, is, Which covering will be the most durable? That is, at the end of five years, which covering will remain in the best repair, and will, at the end of that time, prove to be the best non-conductor? This question of durability, without requiring repairs or attention of any kind, is particularly important for most of our large manufacturing establishments, in which the cheap generation and use of steam is not one of the vital elements of the business, and in which the energy of the management has to be centred on the more intricate problems of how to manufacture cheaply and well. In such establishments, the managers usually want to settle, if possible, once for all such unimportant details as pipe covering, so as not to have to bother with them again for years to come.

In experiments such as Mr. Brill's, this question of durability (the most important of all) can, of course, not be thoroughly dealt with; it can, at best, be looked at from a partially theoretical standpoint.

It is on this point that I have some practical data to present to the Society.

After studying Professor Ordway's experiments, some nine years ago, I arrived at the conclusion that the best solution of the pipe-covering problem lay in finding the proper material to insert between the pipe and hair felt, so as to prevent the latter from becoming charred under the action of heat. After about a year and a half of experimenting, I settled upon three-quarters inch of fossil meal with one inch of hair felt outside of it, as, on the whole, the best. I found that neither five-eighths inch of asbestos felt nor three-eighths inch of fossil meal were sufficient to prevent hair

Digitized by Google

felt from charring, but that three-quarters inch of fossil meal would accomplish this object. Hair felt without any protection between it and the pipe would crumble away, where it came in close contact with the top of the pipe, in about three years. And long before this time the lower part of the hair felt would sag away from the pipe, so as to leave an air space between it and the pipe, which, of course, ruins its value as a pipe covering.

My reason for going into the question of pipe covering so thoroughly at this time was that I was then chief engineer of the Midvale Steel Company, and they were about to put in a new main steam-pipe, the old pipe being entirely abandoned, and a very much enlarged one being substituted throughout the works. This pipe when it was put in was unusually large, starting at 24 inches in diameter and gradually reducing as it progressed throughout the works, until it finally was only about 6 inches in diameter. It was suspended from the roofs of the buildings by long rods, so that it was practically free to expand and contract in whichever direction it could go with the least strain. No expansion joints or copper connections of any kind were used; at intervals, however, the pipe turned off at right angles so as to provide, in the lateral bending of the long lines, for the expansion and contraction, which is always more or less difficult to take care of. This pipe was covered throughout with the following covering:

First. Fossil meal, three-quarters inch thick. This was applied in four layers, the first being merely a wash of fossil meal painted on to the pipe with a brush and allowed to dry; then a layer of fossil meal in the form of mud was spread on to the pipe with the hand to a thickness of one-quarter inch. This was again allowed to become thoroughly dried, the steam being on the pipe all of the time, and a second and third layer of fossil meal were put on in the same way.

Second.—A layer of hair felt an inch thick was tightly bound with strong twine around the outside of the fossil meal, the twine being wrapped close enough together and sufficiently tight to insure a very close and permanent contact between the hair felt and fossil meal.

Third. A layer of resin-sized paper was tightly bound with twine on the outside of the hair felt.

Fourth. A covering of canvas was sewed together outside of the resin-sized paper.

Digitized by Google

Fifth.—This canvas was thoroughly painted with two coats of iron oxide paint, and this is by no means the least important of the elements of the covering.

A few days since, while in Philadelphia, I examined this covering at intervals throughout its length, and found it, after being used for seven and a half years, in an extraordinarily good state of preservation. In fact, for serving its purpose as a pipe-covering it appeared to be as good as new. I did not find a single place in which I could detect that the fossil meal had been jarred loose from the pipe, nor could I satisfy myself that the hair felt had in any case sagged away from the fossil meal at the bottom of the pipe. The canvas had sagged away from the hair felt almost throughout the length of the pipe from $\frac{1}{8}$ to $\frac{3}{4}$ of an inch. The covering showed signs nearly throughout its length of having been walked upon by workmen, but even this did not seem to have crushed or crumbled the fossil meal, although it had compressed the hair felt from 1 inch in thickness down to about $\frac{3}{4}$ of an inch. I cut samples of hair felt from the top of the pipe, where it would naturally be the most damaged, and found that in no case was the felt sufficiently charred away so that the original marking on the surface next to the pipe did not show. It was discolored where it came in contact with the fossil meal, through the action of the heat, to a depth of from $\frac{3}{16}$ to $\frac{3}{8}$ of an inch. But this discoloration had not proceeded to the point of indicating charring. The pipe throughout a great part of its length was subject to an extraordinary amount of jarring and vibration, as it ran right through the centre of a large hammer shop containing ten steam hammers, which were going night and day, most of the time. This is surely a severe test for the fossil meal, or, in fact, any form of pipe-covering, and I think it conclusively shows that fossil meal, when properly put on, is an admirable material to resist jar. The canvas was more damaged than any other part of the covering; but even this showed very slight injury, where it was torn evidently having been damaged by something falling against it and ripping it open. There were, however, very few tears of this kind throughout the pipe. I would here particularly call attention to the desirability of thoroughly painting the canvas where it is to be subject to the action of furnace gases, since unpainted canvas, when used in this same hammer-shop and rolling-mills, and subject to the action of the furnace gases, will last only from six months to a year.

Digitized by Google

This steam-pipe presents an unusually good opportunity for measuring the water which condenses in it. It is constructed as I think all pipes should be, when the opportunity offers.

After collecting steam from the boilers, it rises as rapidly as possible to its maximum height, and from that point slopes gradually downwards so that the condensed water flows in the same direction as the steam, thus avoiding a collection of water in pockets and the danger of water-hammer from this source. All inlet pipes, carrying steam to the main pipe from the boilers, as well as all outlet pipes, delivering steam from the main pipes to the machines, are attached to the upper side of the main pipe. At intervals along the bottom of this pipe drip pipes enter it; these carry the condensed water into a main drip pipe, which slopes steadily back toward the boilers, and there delivers all of the water of condensation directly to the boilers, by gravity; each of four boilers being connected to this pipe by a throttle and check-valve.

Several years ago I fitted a pipe to this drip pipe, just before it reaches the boilers, with suitable valves so that all of the drip water coming from the entire length of the main steam-pipe could be run out through this opening, and its amount measured for a given length of it. Last week, while in Philadelphia, I made a test of the amount of condensed water which came from this pipe in a given time, and since then, Mr. Firth, a member of this Society, and at present engineer of the Midvale Steel Company, made two more similar tests; one while the main pipe was in full use, that is, supplying steam to all of the machines on a week day, and having about 3,700 horse-power of steam running through it; and the second test being on Sunday, when the pipe was lying idle, that is, when the pipe was filled with steam, but supplying a very small amount to only a very few machines.

The drip water was all caught in a barrel with its top tightly closed, and having a ventilating pipe for carrying off the surplus steam, which was large enough and sufficiently high to prevent any material quantity of the water being carried off by escaping steam.

The following are the chief data regarding the steam-pipe and the test.

The pipe carries all of the steam from about 3,700 horse-power of boiler under 70 pounds pressure per square inch.

Digitized by Google

Largest diameter of pipe	24 ins.
Total length of pipe drained	1,813 ft.
Square feet of pipe covered with fossil meal and hair felt	5,441 sq. ft.
Area of pipe, fittings, and flanges which were not covered (in the case of flanges, the area of pipe covered by the flanges was taken—not the entire area of the outside surface of the flanges)	918 sq. ft.
Pressure of steam per square inch in pipe	70 lbs.
Temperature of steam in pipe in degrees Fahrenheit (this temperature taken from tables)	302.77 deg.
Average temperature of air around pipe at time of the experiment, in degrees Fahrenheit	104 deg.
Amount of drip water which came from the pipe in ten minutes on Sunday, when pipe was under full steam pressure, and but little steam was being used	165 lbs.
Amount of drip water, PER HOUR	990 lbs.
Amount of drip water per ten minutes when steam was being used freely from the pipe on a week day	148½ lbs.
Amount of drip water, per hour	891 lbs.
Amount of entrained water carried over per hour from pipe into the machines during week day when machines were running steadily, 990 − 891 =	99 lbs.
Per cent. of water condensed in pipe, and which was carried over into the machines	10 per cent.

If we assume that 3,700 horse-power of steam was passing through the pipe at the time that the drip water was measured, we find that, in a properly constructed and drained steam-pipe, only $\frac{99}{13700} =$ less than $\frac{8}{100}$ of 1 per cent. of entrained water need be carried over to the machine.

In order to compare the results of this experiment with those of Mr. Brill, it is desirable to find the number of pounds of steam condensed per square foot of covered surface per hour, and then compare this figure with the corresponding ones given in the right-hand column of Table "B," in Mr. Brill's paper.

We, therefore, first deduct from the total condensation per hour (990 pounds) the amount of water condensed by the uncovered portion of the pipe. In making this deduction, we have used the figure that was obtained by Mr. Brill for the condensation with bare pipe, per square foot per degree difference in temperature per hour.

The remaining portion of the drip water we divide by the total number of square feet of covered surface of the pipe, and find that the condensation per square foot of pipe surface per hour, for the portion of the pipe covered with fossil meal and hair felt, with 70 pounds steam pressure, and temperature of 104 degrees for the surrounding air, was 0.07735 pounds.

Digitized by Google

If the steam pressure had been 112 pounds, and the difference between the temperature of the steam in pipe and the air surrounding the pipe had been 272.2, as in Mr. Brill's experiments, then the condensation per square foot of pipe per hour for the covered portion would have been .1059 pounds.

Comparing this figure with those in the right-hand column of Table "B," in Mr. Brill's paper, we find it to be very close in efficiency to the best of those obtained by Mr. Brill; there being only four out of the twelve coverings tested by him which gave more economical results than the fossil meal and hair felt. And three out of the four of these coverings were, I think, rightly condemned by him, as probably not being durable.

When it is borne in mind that the Midvale covering had been on the pipe for seven years and a half without practically any repairs being made to it, and that the above test is made at the end of this time, I think that this style of covering can safely be regarded as one of the best, if not the best, type of covering known.

It will be noted that the covering which gave the best result in Mr. Brill's experiments was hair felt protected by the Manville sectional covering.

Fossil meal has proved itself beyond a doubt to be most durable in adhering to the pipe, since it will be remembered that this pipe runs through a large hammer-shop and rolling-mills, in which the jarring from the machines is exceedingly severe on the pipe, and, in spite of this, I could not find a single place in which the fossil meal had jarred loose.

I understand, however, that of late there has been difficulty in getting fossil meal of the same preparation as that which was put on the Midvale pipe. The fossil meal, as prepared at that time, was mixed with a certain amount of hair, so as to cause it to adhere better.

If the Riley cement adheres to the pipe equally well with the fossil meal, it would be, according to Mr. Brill's experiments, about as satisfactory an insulator as the fossil meal.

I would call attention to the fact that in putting on the hair felt it is very important to bind it as tightly as possible to the pipe with very frequent wrappings of elastic twine, so as to prevent it from sagging away from the pipe as it chars on the top side.

Regarding the matter of cost—the actual cost of the hair felt, fossil meal, and painted canvas covering, as put on to the Midvale

Digitized by Google

pipe, is 17.6 cents per square foot, including cost of materials and labor. It is, however, in no way fair to compare this cost with that given in Mr. Brill's tables, since the Midvale covering was put on by a man specially trained to his job, and who did all of the work by piece-work; while, in Mr. Brill's case, the covering was put on by hands not specially skilled in the job. For comparison, referring to Table "E," in the third column, the cost of applying the Midvale covering to 60 feet of pipe would be $24.24, including labor and materials.

The Midvale experiment gives a practical illustration on a large scale of the fact stated in Mr. Jacobus's paper on "Distribution of Moisture in a Horizontal Pipe," that almost the whole of the entrained water in a horizontal drops to the bottom of the pipe, and flows along with the steam close to the pipe; since we see that less than $\frac{8}{100}$ of 1 per cent. of the condensed water was carried over into the machines when the pipe was supplying its full amount of steam on a week day. This experiment also emphasizes the necessity of draining all main steam-pipes of any length at frequent intervals, and from the bottom of the pipe. And it further shows the desirability of attaching to the top of the main pipe all pipes leading from the main to the machines.

Mr. Wm. Kent.—The author of the paper says that he hopes that the chemical analysis given may lead to some discussion as to the effects of the presence of the components upon the pipe-covering when moisture is present, and on page 841, at the head of the tests, he says it is impossible in some cases to state the exact combination between bases and acids present. It will, therefore, be impossible to form any conclusion as to the effect of these components upon the covering of the pipe. But I notice on the tables themselves, on the last line of each of the tables, he has sulphurous acid, and he also gives the formula of sulphurous acid as SO_3. When I studied chemistry it was SO_2. But chemists have yearly conventions now, and frequently change their notation. But I take it that this is a typographical error; that it should be sulphuric acid, and that the SO_3 is the proper formula. If it is sulphuric acid it is probably in all cases satisfied by the lime and magnesia, in which case there would probably be no corrosive action; but in the case of mineral wool and rock wool, I take it that sulphurous acid is correct; or there may be both sulphurous and sulphuric acid, and there may be also sulphur present, in the form of sulphide of iron or sulphide of calcium and magnesium. The

Digitized by Google

question whether this material is corrosive or not is not to be settled by the chemical analysis, but by actual experiment, which can be made very easily by putting samples of these materials into stoppered bottles with a bright piece of iron, and with a small quantity of distilled water, corking the bottle tightly and placing it in an outdoor atmosphere, and if there is any sulphurous or sulphuric acid in such a combination, which has a greater affinity for iron than any other thing present, there would be corrosion, and I think that will be the case with mineral wool, as I have found by actual experiment.

Mr. A. B. Rearick.—I would like to ask Mr. Taylor two questions. One is, does he consider the number of pounds of condensation that takes place, as he describes, to be the same when the pipe is carrying a large quantity of steam through it, as when it is simply filled with steam? Another question is, how much of an offset he gave his pipe, approximately, to allow for expansion?

Mr. Taylor.—On the first question I really have very little information. I do not know at all what the difference in condensation would be if the steam were lying idle in the pipe, or if it were flowing at a rapid rate. As far as the above experiment goes, however, on the Midvale pipe there would not appear to be any great difference in the rate of condensation when the steam was flowing through the pipe and when it was lying idle.

As to the second question; the first straight run was about 200 feet of 24-inch pipe, collecting all the steam throughout the boiler house and delivering it as soon as possible into the top of the hammer-shop. The second run was about 140 feet of 24-inch pipe, and at right angles to the first. The third run was about 60 feet, on a 16-inch branch. And then, further, we had a run of about 300 feet of 14-inch and 12-inch pipe. These are some of the principal lines of pipe. The smaller mains, which lead from these large runs of pipe, stretch out in all directions. I think a very vital matter is that the pipe should be suspended from above with long tie-rods, and not supported on rollers, as is frequently the case, because I have seen this pipe, as it is cooled down, move in all possible directions. It will first start in one direction and then in another and another, finally moving some parts of it as much as 12 to 15 inches at the extremities. Of course, the connections of a pipe of this sort, with the machines, must be long, so that they can readily deflect. They should run

Digitized by Google

up from the top of the pipe, then out at right angles, and down, in every case, for this expansion and contraction.

Mr. Stearns.—How long were those rods?

Mr. Taylor.—The rods were not less than 8 feet in any case, and in many cases much longer.

Professor Carpenter.—I wish to call attention to one fact that I think has not been brought out. If you will notice on page 834, at the bottom, the thickness of these coverings varies very greatly. Take the Table "D," at the bottom of page 834, in which there is a comparison made with the loss from bare pipe, and you will notice that the thickness varies from $\frac{3}{4}$ inch to 4.2 inches. By referring to the first column, it will be seen that the amount of heat lost runs as low as 7.8 per cent. of that from the naked pipe, with the thick covering. I tested the same kind of covering, except that it was less than an inch in thickness, and obtained, practically, twice the condensation shown in this paper; with coverings of the same thickness as recorded by Mr. Brill, the results were the same as his. The covering that I used was furnished by the maker, and I supposed it to be the same as ordinarily sold, and yet the results were not as good, nor were the thicknesses as great. I have purchased a considerable amount of covering, and have never found it to vary a great deal from an inch in thickness, even for very large pipes. I would like to ask whether these were specially prepared for the test or whether they were purchased of the standard thickness. What we obtained varied from 1 inch to $1\frac{1}{4}$ inches in thickness, and instead of transmitting about 8 per cent., it transmitted about 24 per cent. of that from a bare pipe.

Mr. Brill.—In answer to Professor Carpenter's query, I would say that we purchased the covering as we found it in the market. I think most of the makers of pipe-covering vary the thickness somewhat, for different sizes of pipe; thinner coverings are provided for small sizes of pipe than for larger ones. The sectional coverings, as usually made, are increased in thickness as the diameter of pipe increases.

Professor Carpenter.—The question was, why there was so much variation in the thickness of your covering? Those that we tested were practically all the same.

Mr. Brill.—We ordered sufficient covering for 60 feet of 8-inch pipe. In case of the sectional coverings, a sufficient amount was sent to just cover the pipe. In case of the coverings put on wet, the amount sent was applied as uniformly as possible, and the

Digitized by Google

thickness, as taken at numerous places, gave the averages recorded.

Mr. Henning.—Did your sellers know that you wanted this material for testing purposes?

Mr. Brill.—No, sir; I think not. We asked them for 60 feet of their covering. It was furnished promptly. There was no time for special manufacture, nor was there any object, with the knowledge possessed by the maker, in sending anything of special merit.

Mr. W. S. Rogers.—I think the day has almost gone by for carrying steam through long lines of pipe, a third of a mile, for manufacturing purposes, as my friend Taylor has mentioned. At Buffalo, we are not thinking of any such plan. It is now, how to cover the wire which is to bring down the thousands of horse-power from Niagara by electricity. I think that long steam-lines will go out of date. With the present shape in which currents can be transmitted, and the savings obtained that way, the question of long lines of steam-pipe covering will disappear.

*Mr. Geo. M. Brill.**—That the coverings tested were far from uniform thickness is to be kept in mind in attempting to make any deductions for scientific purposes. Referring to the points mentioned by Mr. Nagle, I would say that the pipe was suspended about 10 feet from the floor of a room some 200 feet long, about 50 feet wide, and 25 feet to the peak of the roof. The thermometer which gave the temperature of the air in the room was located about the same elevation, and some 10 feet away from the pipe. Doubtless, some air currents were created by the heat radiated from the pipe; this was practically unavoidable, and no attempt was made to prevent it, but the pipe was placed so as to be out of air currents and draughts from open windows and doors.

That the quality of steam would be uniform was to be expected. The pipe carrying steam from the separator to the test-pipe was 1 inch in diameter, while the separator was 12 inches in diameter and 4 feet long. If the calorimeter produced any effect, due to the steam it used, that effect was continuous, for the calorimeter was in use during the entire period of each run, and used steam at the rate of 80 pounds per hour, which, together with the amount passing on its way to be condensed, surely did not produce a velocity in the 1-inch pipe sufficient to overwork the separator, which had ample capacity to give a uniform qual-

* Author's closure, under the Rules.

Digitized by Google

ity to any amount of steam that might flow through the 1-inch pipe leading from it. Although a calorimeter is usually attached to a larger pipe than was used in this case, as long as the demands upon the separator were not excessive, there is no reason why the calorimeter should not give as true an account of the quality in a 1-inch pipe as it would when attached to a much larger size.

Digitized by Google

DCXLVII.*

A PIECE-RATE SYSTEM,

BEING

A STEP TOWARD PARTIAL SOLUTION OF THE LABOR PROBLEM.

BY FRED. W. TAYLOR, GERMANTOWN, PHILADELPHIA, PA.
(Member of the Society.)

INTRODUCTION.

THE ordinary piece-work system involves a permanent antagonism between employers and men, and a certainty of punishment for each workman who reaches a high rate of efficiency. The demoralizing effect of this system is most serious. Under it, even the best workmen are forced continually to act the part of hypocrites, to hold their own in the struggle against the encroachments of their employers.

The system introduced by the writer, however, is directly the opposite, both in theory and in its results. It makes each workman's interests the same as that of his employer, pays a premium for high efficiency, and soon convinces each man that it is for his permanent advantage to turn out each day the best quality and maximum quantity of work.

The writer has endeavored in the following pages to describe the system of management introduced by him in the works of the Midvale Steel Company, of Philadelphia, which has been employed by them during the past ten years with the most satisfactory results.

The system consists of three principal elements:

(1) An elementary rate-fixing department.

(2) The differential rate system of piece-work.

(3) What he believes to be the best method of managing men who work by the day.

Elementary rate-fixing differs from other methods of making

* Presented at the Detroit Meeting (June, 1895) of the American Society of Mechanical Engineers, and forming part of Volume XVI. of the *Transactions*.

Digitized by Google

piece-work prices in that a careful study is made of the time required to do each of the many elementary operations into which the manufacturing of an establishment may be analyzed or divided. These elementary operations are then classified, recorded, and indexed, and when a piece-work price is wanted for work, the job is first divided into its elementary operations, the time required to do each elementary operation is found from the records, and the total time for the job is summed up from these data. While this method seems complicated at the first glance, it is, in fact, far simpler and more effective than the old method of recording the time required to do whole jobs of work, and then, after looking over the records of similar jobs, guessing at the time required for any new piece of work.

The differential rate system of piece-work consists briefly in offering two different rates for the same job; a high price per piece, in case the work is finished in the shortest possible time and in perfect condition, and a low price, if it takes a longer time to do the job, or if there are any imperfections in the work. (The high rate should be such that the workman can earn more per day than is usually paid in similar establishments.) This is directly the opposite of the ordinary plan of piece-work, in which the wages of the workmen are reduced when they increase their productivity.

The system by which the writer proposes managing the men who are on day-work consists in paying *men* and not *positions*. Each man's wages, as far as possible, are fixed according to the skill and energy with which he performs his work, and not according to the position which he fills. Every endeavor is made to stimulate each man's personal ambition. This involves keeping systematic and careful records of the performance of each man, as to his punctuality, attendance, integrity, rapidity, skill, and accuracy, and a readjustment from time to time of the wages paid him, in accordance with this record.

The advantages of this system of management are:

First. That the manufactures are produced cheaper under it, while at the same time the workmen earn higher wages than are usually paid.

Second. Since the rate-fixing is done from accurate knowledge instead of more or less by guess-work, the motive for holding back on work, or "soldiering," and endeavoring to deceive the

Digitized by Google

employers as to the time required to do work, is entirely removed, and with it the greatest cause for hard feelings and war between the management and the men.

Third. Since the basis from which piece-work as well as day rates are fixed is that of exact observation, instead of being founded upon accident or deception, as is too frequently the case under ordinary systems, the men are treated with greater uniformity and justice, and respond by doing more and better work.

Fourth. It is for the common interest of both the management and the men to coöperate in every way, so as to turn out each day the maximum quantity and best quality of work.

Fifth. The system is rapid, while other systems are slow, in attaining the maximum productivity of each machine and man; and when this maximum is once reached, it is automatically maintained by the differential rate.

Sixth. It automatically selects and attracts the best men for each class of work, and it develops many first-class men who would otherwise remain slow or inaccurate, while at the same time it discourages and sifts out men who are incurably lazy or inferior.

Finally. One of the chief advantages derived from the above effects of the system is, that it promotes a most friendly feeling between the men and their employers, and so renders labor unions and strikes unnecessary.

There has never been a strike under the differential rate system of piece-work, although it has been in operation for the past ten years in the steel business, which has been during this period more subject to strikes and labor troubles than almost any other industry. In describing the above system of management, the writer has been obliged to refer to other piece-work methods, and to indicate briefly what he believes to be their shortcomings.

As but few will care to read the whole paper, the following index to its contents is given :

INDEX.

PARAGRAPH

NEED OF SYSTEM AND METHOD IN MANAGING MEN..... 1-9

SYSTEM OF MANAGING MEN WHO ARE PAID BY THE DAY.

Ordinary system of paying men by the position they occupy instead of by individual merit..... 10

Digitized by Google

PARAGRAPH

Bad effects of this system 11, 12
Proper method of handling men working by the day is to study each man and fix his rate of pay according to his individual merit, not to pay them by classes 13–15, 84–87
Necessity for clerk in managing men 14, 15
Defects in even the best-managed day-work 16, 17
METHODS OF FIXING PIECE-WORK PRICES OR RATES.
ORDINARY PLAN OF FIXING RATES 41, 42
DESCRIPTION OF ELEMENTARY RATE-FIXING 39–43
Description of the starting and development of the first elementary rate-fixing department 44–48
Illustration of elementary rate-fixing 48
Size and scope of rate-fixing department 69, 70
Indirect benefits of elementary rate-fixing almost as great as the direct 74–76
A hand-book on the speed with which different kinds of work can be done badly needed 67, 68
SYSTEMS OF PIECE-WORK IN COMMON USE.
ORDINARY PIECE-WORK SYSTEM 19
Defects in this system 20–24
Slight improvement in ordinary piece-work system 26
"GAIN SHARING" PLAN 27, 29
"PREMIUM PLAN OF PAYING FOR LABOR" 28, 29
Benefits and defects of these two systems 30
The relation of trades unions to other systems of management 92
COÖPERATION OR PROFIT SHARING 31–34
Antagonism of interests of employers and workmen in all ordinary piece-work systems 35
Fundamental basis for harmonious coöperation between workmen and employers 36, 37, 53–55, 59, 61, 65
Obstacles to be overcome before both sides can coöperate harmoniously 38, 39, 49
And principles underlying true coöperation 53–55, 59, 61, 65
DESCRIPTION OF DIFFERENTIAL RATE SYSTEM OF PIECE-WORK 50–52
Advantages of this system 53–65
Description of first application of differential rate, with results attained 71, 79–82
Modification of the differential rate 72, 73
Illustrations of the possibility of increasing the daily output of men and machines 78, 79
Relative importance of elementary rate-fixing department and differential rate 66
There have never been any strikes under the differential rate system of piece-work 88
Moral effect of the various piece-work systems on the men 20–24
Ordinary systems, differential rate 88
Probable future development of this system 89–91

1. Capital demands fully twice the return for money placed in manufacturing enterprises that it does for real estate or

Digitized by Google

transportation ventures. And this probably represents the difference in the risk between these classes of investments.

2. Among the risks of a manufacturing business, by far the greatest is that of bad management; and of the three managing departments, the commercial, the financiering, and the productive, the latter, in most cases, receives the least attention from those that have invested their money in the business, and contains the greatest elements of risk. This risk arises not so much from the evident mismanagement, which plainly discloses itself through occasional strikes and similar troubles, as from the daily more insidious and fatal failure on the part of the superintendents to secure anything even approaching the maximum work from their men and machines.

3. It is not unusual for the manager of a manufacturing business to go most minutely into every detail of the buying and selling and financiering, and arrange every element of these branches in the most systematic manner, and according to principles that have been carefully planned to insure the business against almost any contingency which may arise, while the manufacturing is turned over to a superintendent or foreman, with little or no restrictions as to the principles and methods which he is to pursue, either in the management of his men or the care of the company's plant.

4. Such managers belong distinctly to the old school of manufacturers; and among them are to be found, in spite of their lack of system, many of the best and most successful men of the country. They believe in men, not in methods, in the management of their shops; and what they would call system in the office and sales departments, would be called red tape by them in the factory. Through their keen insight and knowledge of character they are able to select and train good superintendents, who in turn secure good workmen; and frequently the business prospers under this system (or rather, lack of system) for a term of years.

5. The modern manufacturer, however, seeks not only to secure the best superintendents and workmen, but to surround each department of his manufacture with the most carefully woven network of system and method, which should render the business, for a considerable period, at least, independent of the loss of any one man, and frequently of any combination of men.

6. It is the lack of this system and method which, in the judg-

Digitized by Google

ment of the writer, constitutes the greatest risk in manufacturing; placing, as it frequently does, the success of the business at the hazard of the health or whims of a few employees.

7. Even after fully realizing the importance of adopting the best possible system and methods of management for securing a proper return from employees and as an insurance against strikes and the carelessness and laziness of men, there are difficulties in the problem of selecting methods of management which shall be adequate to the purpose, and yet be free from red tape, and inexpensive.

8. The literature on the subject is meagre, especially that which comes from men of practical experience and observation. And the problem is usually solved, after but little investigation, by the adoption of the system with which the managers are most familiar, or by taking a system which has worked well in similar lines of manufacture.

9. Now, among the methods of management in common use there is certainly a great choice; and before describing the "differential rate" system it is desirable to briefly consider the more important of the other methods.

10. The simplest of all systems is the "day-work" plan, in which the employees are divided into certain classes, and a standard rate of wages is paid to each class of men; the laborers all receiving one rate of pay, the machinists all another rate, and the engineers all another, etc. The men are paid according to the position which they fill, and not according to their individual character, energy, skill, and reliability.

11. The effect of this system is distinctly demoralizing and levelling; even the ambitious men soon conclude that since there is no profit to them in working hard, the best thing for them to do is to work just as little as they can and still keep their position. And under these conditions the invariable tendency is to drag them all down even below the level of the medium.

12. The proper and legitimate answer to this herding of men together into classes, regardless of personal character and performance, is the formation of the labor union, and the strike, either to increase the rate of pay and improve conditions of employment, or to resist the lowering of wages and other encroachments on the part of employers.

13. The necessity for the labor union, however, disappears when *men* are paid, and not *positions;* that is, when the em-

Digitized by Google

ployers take pains to study the character and performance of each of their employees and pay them accordingly, when accurate records are kept of each man's attendance, punctuality, the amount and quality of work done by him, and his attitude towards his employers and fellow-workmen.

As soon as the men recognize that they have free scope for the exercise of their proper ambition, that as they work harder and better their wages are from time to time increased, and that they are given a better class of work to do—when they recognize this, the best of them have no use for the labor union.

14. Every manufacturer must from necessity employ a certain amount of day-labor which cannot come under the piece-work system; and yet how few employers are willing to go to the trouble and expense of the slight organization necessary to handle their men in this way? How few of them realize that, by the employment of an extra clerk and foreman, and a simple system of labor returns, to record the performance and readjust the wages of their men, so as to stimulate their personal ambition, the output of a gang of twenty or thirty men can be readily doubled in many cases, and at a comparatively slight increase of wages per capita!

15. The clerk in the factory is the particular horror of the old-style manufacturer. He realizes the expense each time that he looks at him, and fails to see any adequate return; yet by the plan here described the clerk becomes one of the most valuable agents of the company.

16. If the plan of grading labor and recording each man's performance is so much superior to the old day-work method of handling men, why is it not all that is required? Because no foreman can watch and study all of his men all of the time, and because any system of laying out and apportioning work, and of returns and records, which is sufficiently elaborate to keep proper account of the performance of each workman, is more complicated than piece-work. It is evident that that system is the best which, in attaining the desired result, presents in the long run the course of least resistance.

17. The inherent and most serious defect of even the best managed day-work lies in the fact that there is nothing about the system that is self-sustaining. When once the men are working at a rapid pace, there is nothing but the constant, unremitting watchfulness and energy of the management to keep

Digitized by Google

them there; while with every form of piece-work each new rate that is fixed insures a given speed for another section of work, and to that extent relieves the foreman from worry.

18. From the best type of day-work to ordinary piece-work the step is a short one. With good day-work the various operations of manufacturing should have been divided into small sections or jobs, in order to properly gauge the efficiency of the men; and the quickest time should have been recorded in which each operation has been performed. The change from paying by the hour to paying by the job is then readily accomplished.

19. The theory upon which the ordinary system of piece-work operates to the benefit of the manufacturer is exceedingly simple. Each workman, with a definite price for each job before him, contrives a way of doing it in a shorter time, either by working harder or by improving his method; and he thus makes a larger profit. After the job has been repeated a number of times at the more rapid rate, the manufacturer thinks that he should also begin to share in the gain, and therefore reduces the price of the job to a figure at which the workman, although working harder, earns, perhaps, but little more than he originally did when on day-work.

20. The actual working of the system, however, is far different. Even the most stupid man, after receiving two or three piece-work "cuts" as a reward for his having worked harder, resents this treatment and seeks a remedy for it in the future. Thus begins a war, generally an amicable war, but none the less a war, between the workmen and the management. The latter endeavors by every means to induce the workmen to increase the output, and the men gauge the rapidity with which they work, so as never to earn over a certain rate of wages, knowing that if they exceed this amount the piece-work price will surely be cut, sooner or later.

21. But the war is by no means restricted to piece-work. Every intelligent workman realizes the importance, to his own interest, of starting in on each new job as slowly as possible. There are few foremen or superintendents who have anything but a general idea as to how long it should take to do a piece of work that is new to them. Therefore, before fixing a piece-work price, they prefer to have the job done for the first time by the day. They watch the progress of the work as closely as their other duties will permit, and make up their minds how quickly

Digitized by Google

it can be done. It becomes the workman's interest then to go just as slowly as possible, and still convince his foreman that he is working well.

22. The extent to which, even in our largest and best-managed establishments, this plan of holding back on the work—"marking time," or "soldiering," as it is called—is carried on by the men, can scarcely be understood by one who has not worked among them. It is by no means uncommon for men to work at the rate of one-third, or even one-quarter, their maximum speed, and still preserve the appearance of working hard. And when a rate has once been fixed on such a false basis, it is easy for the men to nurse successfully "a soft snap" of this sort through a term of years, earning in the meanwhile just as much wages as they think they can without having the rate cut.

23. Thus arises a system of hypocrisy and deceit on the part of the men which is thoroughly demoralizing, and which has led many workmen to regard their employers as their natural enemies, to be opposed in whatever they want, believing that whatever is for the interest of the management must necessarily be to their detriment.

24. The effect of this system of piece-work on the character of the men is, in many cases, so serious as to make it doubtful whether, on the whole, well-managed day-work is not preferable.

25. There are several modifications of the ordinary method of piece-work which tend to lessen the evils of the system, but I know of none that can eradicate the fundamental causes for war, and enable the managers and the men to heartily coöperate in obtaining the maximum product from the establishment. It is the writer's opinion, however, that the differential rate system of piece-work, which will be described later, in most cases entirely harmonizes the interests of both parties.

26. One method of temporarily relieving the strain between workmen and employers consists in reducing the price paid for work, and at the same time guaranteeing the men against further reduction for a definite period. If this period be made sufficiently long, the men are tempted to let themselves out and earn as much money as they can, thus "spoiling" their own job by another "cut" in rates when the period has expired.

27. Perhaps the most successful modification of the ordinary system of piece-work is the "gain-sharing plan." This was invented by Mr. Henry R. Towne, in 1886, and has since been

Digitized by Google

extensively and successfully applied by him in the Yale & Towne Manufacturing Co., at Stamford, Conn. It was admirably described in a paper which he read before this Society in 1888. This system of paying men is, however, subject to the serious, and I think fatal, defect that it does not recognize the personal merit of each workman; the tendency being rather to herd men together and promote trades-unionism, than to develop each man's individuality.

28. A still further improvement of this method was made by Mr. F. A. Halsey, and described by him in a paper entitled "The Premium Plan of Paying for Labor," and presented to this Society in 1891. Mr. Halsey's plan allows free scope for each man's personal ambition, which Mr. Towne's does not.

29. Messrs. Towne and Halsey's plans consist briefly in recording the cost of each job as a starting-point at a certain time; then, if, through the effort of the workmen in the future, the job is done in a shorter time and at a lower cost, the gain is divided among the workmen and the employer in a definite ratio, the workmen receiving, say, one-half, and the employer one-half.

30. Under this plan, if the employer lives up to his promise, and the workman has confidence in his integrity, there is the proper basis for coöperation to secure sooner or later a large increase in the output of the establishment.

Yet there still remains the temptation for the workman to "soldier" or hold back while on day-work, which is the most difficult thing to overcome. And in this as well as in all the systems heretofore referred to, there is the common defect: that the starting-point from which the first rate is fixed is unequal and unjust. Some of the rates may have resulted from records obtained when a good man was working close to his maximum speed, while others are based on the performance of a medium man at one-third or one-quarter speed. From this follows a great inequality and injustice in the reward even of the same man when at work on different jobs. The result is far from a realization of the ideal condition in which the same return is uniformly received for a given expenditure of brains and energy. Other defects in the gain-sharing plan, and which are corrected by the differential rate system, are:

(1) That it is slow and irregular in its operation in reducing costs, being dependent upon the whims of the men working under it.

Digitized by Google

(2) That it fails to especially attract first-class men and discourage inferior men.

(3) That it does not automatically insure the maximum output of the establishment per man and machine.

31. Coöperation, or profit sharing, has entered the mind of every student of the subject as one of the possible and most attractive solutions of the problem; and there have been certain instances, both in England and France, of at least a partial success of coöperative experiments.

So far as I know, however, these trials have been made either in small towns, remote from the manufacturing centres, or in industries which in many respects are not subject to ordinary manufacturing conditions.

32. Coöperative experiments have failed, and, I think, are generally destined to fail, for several reasons, the first and most important of which is, that no form of coöperation has yet been devised in which each individual is allowed free scope for his personal ambition. This always has been and will remain a more powerful incentive to exertion than a desire for the general welfare. The few misplaced drones, who do the loafing and share equally in the profits with the rest, under coöperation are sure to drag the better men down toward their level.

33. The second and almost equally strong reason for failure lies in the remoteness of the reward. The average workman (I don't say all men) cannot look forward to a profit which is six months or a year away. The nice time which they are sure to have to-day, if they take things easily, proves more attractive than hard work, with a possible reward to be shared with others six months later.

34. Other and formidable difficulties in the path of coöperation are, the equitable division of the profits, and the fact that, while workmen are always ready to share the profits, they are neither able nor willing to share the losses. Further than this, in many cases, it is neither right nor just that they should share either in the profits or the losses, since these may be due in great part to causes entirely beyond their influence or control, and to which they do not contribute.

35. When we recognize the real antagonism that exists between the interests of the men and their employers, under all of the systems of piece-work in common use; and when we re-

Digitized by Google

member the apparently irreconcilable conflict implied in the fundamental and perfectly legitimate aims of the two: namely, on the part of the men:

THE UNIVERSAL DESIRE TO RECEIVE THE LARGEST POSSIBLE WAGES FOR THEIR TIME.

And on the part of the employers:

THE DESIRE TO RECEIVE THE LARGEST POSSIBLE RETURN FOR THE WAGES PAID.

What wonder that most of us arrive at the conclusion that no system of piece-work can be devised which shall enable the two to coöperate without antagonism, and to their mutual benefit?

36. Yet it is the opinion of the writer, that even if a system has not already been found which harmonizes the interests of the two, still the basis for harmonious coöperation lies in the two following facts:

First. That the workmen in nearly every trade can and will materially increase their present output per day, providing they are assured of a permanent and larger return for their time than they have heretofore received.*

Second. That the employers can well afford to pay higher wages per piece even permanently, providing each man and machine in the establishment turns out a proportionately larger amount of work.

37. The truth of the latter statement arises from the well-recognized fact that, in most lines of manufacture, the indirect expenses equal or exceed the wages paid directly to the workmen, and that these expenses remain approximately constant, whether the output of the establishment is great or small.

From this it follows that it is always cheaper to pay higher wages to the workmen when the output is proportionately increased; the diminution in the indirect portion of the cost per piece being greater than the increase in wages. Many manufacturers, in considering the cost of production, fail to realize the effect that the *volume of output has on the cost.* They lose sight of the fact that taxes, insurance, depreciation, rent, interest, sal-

* The writer's knowledge of the speed attained in the manufacture of textile goods is very limited. It is his opinion, however, that owing to the comparative uniformity of this class of work, and the enormous number of machines and men engaged on similar operations, the maximum output per man and machine is more nearly realized in this class of manufactures than in any other. If this is the case, the opportunity for improvement does not exist to the same extent here as in other trades. Some illustrations of the possible increase in the daily output of men and machines are given in paragraphs 78 to 82.

Digitized by Google

aries, office expenses, miscellaneous labor, sales expenses, and frequently the cost of power (which in the aggregate amount to as much as wages paid to workmen), remain about the same whether the output of the establishment is great or small.

38. In our endeavor to solve the piece-work problem by the application of the two fundamental facts above referred to, let us consider the obstacles in the path of harmonious coöperation, and suggest a method for their removal.

39. The most formidable obstacle is the lack of knowledge on the part of both the men and the management (but chiefly the latter) of the quickest time in which each piece of work can be done; or, briefly, the lack of accurate time-tables for the work of the place.

40. The remedy for this trouble lies in the establishment in every factory of a proper rate-fixing department; a department which shall have equal dignity and command equal respect with the engineering and managing departments, and which shall be organized and conducted in an equally scientific and practical manner.

41. The rate-fixing, as at present conducted, even in our best-managed establishments, is very similar to the mechanical engineering of fifty or sixty years ago. Mechanical engineering at that time consisted in imitating machines which were in more or less successful use, or in guessing at the dimensions and strength of the parts of a new machine; and as the parts broke down or gave out, in replacing them with stronger ones. Thus each new machine presented a problem almost independent of former designs, and one which could only be solved by months or years of practical experience and a series of break-downs.

Modern engineering, however, has become a study, not of individual machines, but of the resistance of materials, the fundamental principles of mechanics, and of the elements of design.

42. On the other hand, the ordinary rate-fixing (even the best of it), like the old-style engineering, is done by a foreman or superintendent, who, with the aid of a clerk, looks over the record of the time in which a whole job was done as nearly like the new one as can be found, and then guesses at the time required to do the new job. No attempt is made to analyze and time each of the classes of work, or elements of which a job is composed; although it is a far simpler task to resolve each job

Digitized by Google

into its elements, to make a careful study of the quickest time in which each of the elementary operations can be done, and then to properly classify, tabulate, and index this information, and use it when required for rate fixing, than it is to fix rates, with even an approximation to justice, under the common system of guessing.

43. In fact, it has never occurred to most superintendents that the work of their establishments consists of various combinations of elementary operations which can be timed in this way; and a suggestion that this is a practical way of dealing with the piece-work problem usually meets with derision, or, at the best, with the answer that "It might do for some simple business, but my work is entirely too complicated."

44. Yet this elementary system of fixing rates has been in successful operation for the past ten years, on work complicated in its nature, and covering almost as wide a range of variety as any manufacturing that the writer knows of. In 1883, while foreman of the machine shop of the Midvale Steel Company of Philadelphia, it occurred to the writer that it was simpler to time each of the elements of the various kinds of work done in the place, and then find the quickest time in which each job could be done, by summing up the total times of its component parts, than it was to search through the records of former jobs, and guess at the proper price. After practising this method of rate-fixing himself for about a year, as well as circumstances would permit, it became evident that the system was a success. The writer then established the rate-fixing department, which has given out piece-work prices in the place ever since.

45. This department far more than paid for itself from the very start; but it was several years before the full benefits of the system were felt, owing to the fact that the best methods of making and recording time observations of work done by the men, as well as of determining the maximum capacity of each of the machines in the place, and of making working-tables and time-tables, were not at first adopted.

46. Before the best results were finally attained in the case of work done by metal-cutting tools, such as lathes, planers, boring mills, etc., a long and expensive series of experiments was made, to determine, formulate, and finally practically apply to each machine the law governing the proper cutting speed of tools; namely, the effect on the cutting speed of altering any

Digitized by Google

one of the following variables: the shape of the tool (*i.e.*, lip angle, clearance angle, and the line of the cutting edge), the duration of the cut, the quality or hardness of the metal being cut, the depth of the cut, and the thickness of the feed or shaving.

47. It is the writer's opinion that a more complicated and difficult piece of rate-fixing could not be found than that of determining the proper price for doing all kinds of machine work on miscellaneous steel and iron castings and forgings, which vary in their chemical composition from the softest iron to the hardest tool steel. Yet this problem was solved through the rate-fixing department and the "differential rate." with the final result of completely harmonizing the men and the management, in place of the constant war that existed under the old system. At the same time the quality of the work was improved, and the output of the machinery and the men was doubled, and, in many cases, trebled. At the start there was naturally great opposition to the rate-fixing department, particularly to the man who was taking time observations of the various elements of the work; but when the men found that rates were fixed without regard to the records of the quickest time in which they had actually done each job, and that the knowledge of the department was more accurate than their own, the motive for hanging back or "soldiering" on this work ceased, and with it the greatest cause for antagonism and war between the men and the management.

48. As an illustration of the great variety of work to which elementary rate-fixing has already been successfully applied, the writer would state that, while acting as general manager of two large sulphite pulp mills, he directed the application of piece-work to all of the complicated operations of manufacturing throughout one of these mills, by means of elementary rate-fixing, with the result, within eighteen months, of more than doubling the output of the mill.

The difference between elementary rate-fixing and the ordinary plan can perhaps be best explained by a simple illustration. Suppose the work to be planing a surface on a piece of cast iron. In the ordinary system the rate-fixer would look through his records of work done by the planing-machine, until he found a piece of work as nearly as possible similar to the proposed job, and then guess at the time required to do the new

Digitized by Google

piece of work. Under the elementary system, however, some such analysis as the following would be made:

Work done by Man.	*Minutes.*
Time to lift piece from floor to planer table	———
Time to level and set work true on table	———
Time to put on stops and bolts	———
Time to remove stops and bolts	———
Time to remove piece to floor	———
Time to clean machine	———
Work done by Machine.	*Minutes.*
Time to rough off cut ¼ in. thick, 4 feet long, 2½ ins. wide	———
Time to rough off cut ⅛ in. thick, 8 feet long, 12 ins. wide, etc.	———
Time to finish cut 4 feet long, 2½ ins. wide	———
Time to finish cut 8 feet long, 12 ins. wide, etc	———
Total	———
Add ——— per cent. for unavoidable delays	———

It is evident that this job consists of a combination of elementary operations, the time required to do each of which can be readily determined by observation.

This exact combination of operations may never occur again, but elementary operations similar to these will be performed in differing combinations almost every day in the same shop.

A man whose business it is to fix rates soon becomes so familiar with the time required to do each kind of elementary work performed by the men, that he can write down the time from memory.

In the case of that part of the work which is done by the machine the rate-fixer refers to tables which are made out for each machine, and from which he takes the time required for any combination of breadth, depth, and length of cut.

49. While, however, the accurate knowledge of the quickest time in which work can be done, obtained by the rate-fixing department and accepted by the men as standard, is the greatest and most important step towards obtaining the maximum output of the establishment, it is one thing to know how much work can be done in a day, and an entirely different matter to get even the best men to work at their fastest speed or anywhere near it.

50. The means which the writer has found to be by far the most effective in obtaining the maximum output of a shop, and

Digitized by Google

which, so far as he can see, satisfies the legitimate requirements, both of the men and the management, is the *differential rate system of piece-work.*

This consists briefly in paying a higher price per piece, or per unit, or per job, if the work is done in the shortest possible time, and without imperfections, than is paid if the work takes a longer time or is imperfectly done.

51. To illustrate: Suppose 20 units or pieces to be the largest amount of work of a certain kind that can be done in a day. Under the differential rate system, if a workman finishes 20 pieces per day, and all of these pieces are perfect, he receives, say, 15 cents per piece, making his pay for the day $15 \times 20 = \$3$. If, however, he works too slowly and turns out, say, only 19 pieces, then, instead of receiving 15 cents per piece he gets only 12 cents per piece, making his pay for the day $12 \times 19 = \$2.28$, instead of \$3 per day.

If he succeeds in finishing 20 pieces, some of which are imperfect, then he should receive a still lower rate of pay, say, 10 cents or 5 cents per piece, according to circumstances, making his pay for the day \$2, or only \$1, instead of \$3.

52. It will be observed that this style of piece-work is directly the opposite of the ordinary plan. To make the difference between the two methods more clear: Supposing, under the ordinary system of piece-work, that the workman has been turning out 16 pieces per day, and has received 15 cents per piece, then his day's wages would be $15 \times 16 = \$2.40$. Through extra exertion he succeeds in increasing his output to 20 pieces per day, and thereby increases his pay to $15 \times 20 = \$3$. The employer, under the old system, however, concludes that \$3 is too much for the man to earn per day, since other men are only getting from \$2.25 to \$2.50, and therefore cuts the price from 15 cents per piece to 12 cents, and the man finds himself working at a more rapid pace, and yet earning only the same old wages, $12 \times 20 = \$2.40$ per day. What wonder that men do not care to repeat this performance many times?

53. Whether coöperation, the differential plan, or some other form of piece-work be chosen in connection with elementary rate-fixing, as the best method of working, there are certain fundamental facts and principles which must be recognized and incorporated in any system of management, before true and lasting success can be attained; and most of these facts and prin-

Digitized by Google

ciples will be found to be not far removed from what the strictest moralists would call justice.

54. The most important of these facts is, that MEN WILL NOT DO AN EXTRAORDINARY DAY'S WORK FOR AN ORDINARY DAY'S PAY; and any attempt on the part of employers to get the best work out of their men and give them the standard wages paid by their neighbors will surely be, and ought to be, doomed to failure.

55. Justice, however, not only demands for the workman an increased reward for a large day's work, but should compel him to suffer an appropriate loss in case his work falls off either in quantity or quality. It is quite as important that the deductions for bad work should be just, and graded in proportion to the shortcomings of the workman, as that the reward should be proportional to the work done.

The fear of being discharged, which is practically the only penalty applied in many establishments, is entirely inadequate to producing the best quantity and quality of work; since the workmen find that they can take many liberties before the management makes up its mind to apply this extreme penalty.

56. It is clear that the differential rate satisfies automatically, as it were, the above conditions of properly graded rewards and deductions. Whenever a workman works for a day (or even a shorter period) at his maximum, he receives under this system unusually high wages; but when he falls off either in quantity or quality from the highest rate of efficiency his pay falls below even the ordinary.

57. The lower differential rate should be fixed at a figure which will allow the workman to earn scarcely an ordinary day's pay when he falls off from his maximum pace, so as to give him every inducement to work hard and well.

58. The exact percentage beyond the usual standard which must be paid to induce men to work to their maximum varies with different trades and with different sections of the country. And there are places in the United States where the men (generally speaking) are so lazy and demoralized that no sufficient inducement can be offered to make them do a full day's work.

59. It is not, however, sufficient that each workman's ambition should be aroused by the prospect of larger pay at the end of even a comparatively short period of time. The stimulus to maximum exertion should be a daily one.

Digitized by Google

This involves such vigorous and rapid inspection and returns as to enable each workman in most cases to know each day the exact result of his previous day's work—*i. e.*, whether he has succeeded in earning his maximum pay, and exactly what his losses are for careless or defective work. Two-thirds of the moral effect, either of a reward or penalty, is lost by even a short postponement.

60. It will again be noted that the differential rate system forces this condition both upon the management and the workmen, since the men, while working under it, are above all anxious to know at the earliest possible minute whether they have earned their high rate or not. And it is equally important for the management to know whether the work has been properly done.

61. As far as possible each man's work should be inspected and measured separately, and his pay and losses should depend upon his individual efforts alone. It is, of course, a necessity that much of the work of manufacturing—such, for instance, as running roll-trains, hammers, or paper machines—should be done by gangs of men who coöperate to turn out a common product, and that each gang of men should be paid a definite price for the work turned out, just as if they were a single man.

In the distribution of the earnings of a gang among its members, the percentage which each man receives should, however, depend not only upon the kind of work which each man performs, but upon the accuracy and energy with which he fills his position.

In this way the personal ambition of each of a gang of men may be given its proper scope.

62. Again, we find the differential rate acting as a most powerful lever to force each man in a gang of workmen to do his best; since if, through the carelessness or laziness of any one man, the gang fails to earn its high rate, the drone will surely be obliged by his companions to do his best the next time or else get out.

63. A great advantage of the differential rate system is that it quickly drives away all inferior workmen, and attracts the men best suited to the class of work to which it is applied; since none but really good men can work fast enough and accurately enough to earn the high rate; and the low rate should be made so small as to be unattractive even to an inferior man.

64. If for no other reason than it secures to an establishment a quick and active set of workmen, the differential rate is a valuable aid, since men are largely creatures of habit; and if the

Digitized by Google

piece-workers of a place are forced to move quickly and work hard the day-workers soon get into the same way, and the whole shop takes on a more rapid pace.

65. The greatest advantage, however, of the differential rate for piece-work, in connection with a proper rate-fixing department, is that together they produce the proper mental attitude on the part of the men and the management toward each other. In place of the indolence and indifference which characterize the workmen of many day-work establishments, and to a considerable extent also their employers; and in place of the constant watchfulness, suspicion, and even antagonism with which too frequently the men and the management regard each other, under the ordinary piece-work plan, both sides soon appreciate the fact that with the differential rate it is their common interest to coöperate to the fullest extent, and to devote every energy to turning out daily the largest possible output. This common interest quickly replaces antagonism, and establishes a most friendly feeling.

66. Of the two devices for increasing the output of a shop, the differential rate and the scientific rate-fixing department, the latter is by far the more important. The differential rate is invaluable at the start, as a means of convincing men that the management is in earnest in its intention of paying a premium for hard work; and it at all times furnishes the best means of maintaining the top notch of production; but when, through its application, the men and the management have come to appreciate the mutual benefit of harmonious coöperation and respect for each other's rights, it ceases to be an absolute necessity. On the other hand, the rate-fixing department, for an establishment doing a large variety of work, becomes absolutely indispensable. The longer it is in operation the more necessary it becomes.

67. Practically, the greatest need felt in an establishment wishing to start a rate-fixing department is the lack of data as to the proper rate of speed at which work should be done.

There are hundreds of operations which are common to most large establishments; yet each concern studies the speed problem for itself, and days of labor are wasted in what should be settled once for all, and recorded in a form which is available to all manufacturers.

68. What is needed is a hand-book on the speed with which work can be done, similar to the elementary engineering handbooks. And the writer ventures to predict that such a book

Digitized by Google

will before long be forthcoming. Such a book should describe the best method of making, recording, tabulating, and indexing time-observations, since much time and effort are wasted by the adoption of inferior methods.

69. The term "rate-fixing department" has rather a formidable sound. In fact, however, that department should consist in most establishments of one man, who, in many cases, need give only a part of his time to the work.

70. When the manufacturing operations are uniform in character, and repeat themselves day after day—as, for instance, in paper or pulp mills—the whole work of the place can be put upon piece-work in a comparatively short time; and when once proper rates are fixed, the rate-fixing department can be dispensed with, at any rate until some new line of manufacture is taken up.

71. The system of differential rates was first applied by the writer to a part of the work in the machine shop of the Midvale Steel Company, in 1884. Its effect in increasing and then maintaining the output of each machine to which it was applied was almost immediate, and so remarkable that it soon came into high favor, with both the men and the management. It was gradually applied to a great part of the work of the establishment, with the result, in combination with the rate-fixing department, of doubling and in many cases trebling the output, and at the same time increasing instead of diminishing the accuracy of the work.

72. In some cases it was applied by the rate-fixing department without an elementary analysis of the time required to do the work; simply offering a higher price per piece providing the maximum output before attained was increased to a given extent. Even this system met with success, although it is by no means correct, since there is no certainty that the reward is in just proportion to the efforts of the workmen.

73. In cases where large and expensive machines are used, such as paper machines, steam hammers, or rolling mills, in which a large output is dependent upon the severe manual labor as well as the skill of the workmen (while the chief cost of production lies in the expense of running the machines rather than in the wages paid), it has been found of great advantage to establish two or three differential rates, offering a higher and higher price per piece or per ton as the maximum possible output is approached.

Digitized by Google

74. As before stated, not the least of the benefits of elementary rate-fixing are the indirect results.

The careful study of the capabilities of the machines, and the analysis of the speeds at which they must run, before differential rates can be fixed which will insure their maximum output, almost invariably result in first indicating and then correcting the defects in their design, and in the method of running and caring for them.

75. In the case of the Midvale Steel Company, to which I have already referred, the machine shop was equipped with standard tools furnished by the best makers, and the study of these machines, such as lathes, planers, boring mills, etc., which was made in fixing rates, developed the fact that they were none of them designed and speeded so as to cut steel to the best advantage. As a result, this company has demanded alterations from the standard in almost every machine which they have bought during the past eight years. They have themselves been obliged to superintend the design of many special tools which would not have been thought of had it not been for elementary rate-fixing.

76. But what is, perhaps, of more importance still, the rate-fixing department has shown the necessity of carefully systematizing all of the small details in the running of each shop; such as the care of belting, the proper shape for cutting tools, and the dressing, grinding, and issuing same, oiling machines, issuing orders for work, obtaining accurate labor and material returns, and a host of other minor methods and processes. These details, which are usually regarded as of comparatively small importance, and many of which are left to the individual judgment of the foreman and workmen, are shown by the rate-fixing department to be of paramount importance in obtaining the maximum output, and to require the most careful and systematic study and attention in order to insure uniformity and a fair and equal chance for each workman. Without this preliminary study and systematizing of details, it is impossible to apply successfully the differential rate in most establishments.

77. As before stated, the success of this system of piece-work depends fundamentally upon the possibility of materially increasing the output per man and per machine, providing the proper man be found for each job and the proper incentive be offered to him.

Digitized by Google

78. As an illustration of the difference between what ought to be done by a workman well suited to his job, and what is generally done, I will mention a single class of work, performed in almost every establishment in the country. In shovelling coal from a car over the side on to a pile one man should unload forty tons per day, and keep it up, year in and year out, and thrive under it.

With this knowledge of the possibilities I have never failed to find men who were glad to work at this speed for from four and a half to five cents per ton. The average speed for unloading coal in most places, however, is nearer fifteen than forty tons per day. In securing the above rate of speed it must be clearly understood that the problem is not how to force men to work harder or longer hours than their health will permanently allow; but, rather, first, to select among the laborers which are to be found in every community the men who are physically able to work permanently at that job, and at the speed mentioned, without damage to their health, and who are mentally sufficiently inert to be satisfied with the monotony of the work, and then, to offer them such inducements as will make them happy and contented in doing so.

79. The first case in which a differential rate was applied furnishes a good illustration of what can be accomplished by it.

A standard steel forging, many thousands of which are used each year, had for several years been turned at the rate of from four to five per day under the ordinary system of piece-work, 50 cents per piece being the price paid for the work. After analyzing the job and determining the shortest time required to do each of the elementary operations of which it was composed, and then summing up the total, the writer became convinced that it was possible to turn ten pieces a day. To finish the forgings at this rate, however, the machinists were obliged to work at their maximum pace from morning to night, and the lathes were run as fast as the tools would allow, and under a heavy feed.

It will be appreciated that this was a big day's work, both for men and machines, when it is understood that it involved removing, with a single 16-inch lathe, having two saddles, an average of more than 800 pounds of steel chips in ten hours. In place of the 50-cent rate that they had been paid before, they were given 35 cents per piece when they turned them at

Digitized by Google

the speed of 10 per day, and when they produced less than 10, they received only 25 cents per piece.

80. It took considerable trouble to induce the men to turn at this high speed, since they did not at first fully appreciate that it was the intention of the firm to allow them to earn permanently at the rate of $3.50 per day. But from the day they first turned 10 pieces to the present time, a period of more than ten years, the men who understood their work have scarcely failed a single day to turn at this rate. Throughout that time, until the beginning of the recent fall in the scale of wages throughout the country, the rate was not cut.

81. During this whole period the competitors of the company never succeeded in averaging over half of this production per lathe, although they knew and even saw what was being done at Midvale. They, however, did not allow their men to earn over from $2 to $2.50 per day, and so never even approached the maximum output.

82. The following table will show the economy of paying high wages under the differential rate in doing the above job:

COST OF PRODUCTION PER LATHE PER DAY.

Ordinary system of piece-work.		*Differential rate system.*	
Man's wages	$2 50	Man's wages	$3 50
Machine cost	3 37	Machine cost	3 37
Total cost per day	$5 87	Total cost per day	$6 87
5 pieces produced.		10 pieces produced.	
Cost per piece	$1 17	Cost per piece	$0 69

The above result was mostly, though not entirely, due to the differential rate. The superior system of managing all of the small details of the shop counted for considerable.

83. There has never been a strike by men working under differential rates, although these rates have been applied at the Midvale Steel Works for the past ten years; and the steel business has proved during this period the most fruitful field for labor organizations and strikes. And this notwithstanding the Midvale Company has never prevented its men from joining any labor organization. All of the best men in the company saw clearly that the success of a labor organization meant the lowering of their wages, in order that the inferior men might earn more, and, of course, could not be persuaded to join.

Digitized by Google

84. I attribute a great part of this success in avoiding strikes to the high wages which the best men were able to earn with the differential rates, and to the pleasant feeling fostered by this system; but this is by no means the whole cause. It has for years been the policy of that company to stimulate the personal ambition of every man in their employ, by promoting them either in wages or position whenever they deserved it, and the opportunity came.

A careful record has been kept of each man's good points as well as his shortcomings, and one of the principal duties of each foreman was to make this careful study of his men, so that substantial justice could be done to each. When men, throughout an establishment, are paid varying rates of day-work wages, according to their individual worth, some being above and some below the average, it cannot be for the interest of those receiving high pay to join a union with the cheap men.

85. No system of management, however good, should be applied in a wooden way. The proper personal relations should always be maintained between the employers and men; and even the prejudices of the workmen should be considered in dealing with them.

The employer who goes through his works with kid gloves on, and is never known to dirty his hands or clothes, and who either talks to his men in a condescending or patronizing way, or else not at all, has no chance whatever of ascertaining their real thoughts or feelings.

86. Above all is it desirable that men should be talked to on their own level by those who are over them. Each man should be encouraged to discuss any trouble which he may have, either in the works or outside, with those over him. Men would far rather even be blamed by their bosses, especially if the "tearing out" has a touch of human nature and feeling in it, than to be passed by day after day without a word, and with no more notice than if they were part of the machinery.

The opportunity which each man should have of airing his mind freely, and having it out with his employers, is a safety-valve; and if the superintendents are reasonable men, and listen to and treat with respect what their men have to say, there is absolutely no reason for labor unions and strikes.

87. It is not the large charities (however generous they may

Digitized by Google

be) that are needed or appreciated by workmen, such as the founding of libraries and starting workingmen's clubs, so much as small acts of personal kindness and sympathy, which establish a bond of friendly feeling between them and their employers.

88. The moral effect of the writer's system on the men is marked. The feeling that substantial justice is being done them renders them on the whole much more manly, straightforward, and truthful. They work more cheerfully, and are more obliging to one another and their employers. They are not soured, as under the old system, by brooding over the injustice done them; and their spare minutes are not spent to the same extent in criticising their employers.

A noted French engineer and steel manufacturer, who recently spent several weeks in the works of the Midvale Company in introducing a new branch of manufacture, stated before leaving that the one thing which had impressed him as most unusual and remarkable about the place was the fact that not only the foremen, but the workmen, were expected to and did in the main tell the truth in case of any blunder or carelessness, even when they had to suffer from it themselves.

89. From what the writer has said he is afraid that many readers may gain the impression that he regards elementary rate-fixing and the differential rate as a sort of panacea for all human ills.

This is, however, far from the case. While he regards the possibilities of these methods as great, he is of the opinion, on the contrary, that this system of management will be adopted by but few establishments, in the near future, at least; since its really successful application not only involves a thorough organization, but requires the machinery and tools throughout the place to be kept in such good repair that it will be possible for the workmen each day to produce their maximum output. But few manufacturers will care to go to this trouble until they are forced to.

90. It is his opinion that the most successful manufacturers, those who are always ready to adopt the best machinery and methods when they see them, will gradually avail themselves of the benefits of scientific rate-fixing; and that competition will compel the others to follow slowly in the same direction.

Digitized by Google

91. Even if all of the manufacturers in the country who are competing in the same line of business were to adopt these methods, they could still well afford to pay the high rate of wages demanded by the differential rate, and necessary to induce men to work fast, since it is a well-recognized fact the world over that the highest-priced labor, providing it is proportionately productive, is the cheapest; and the low cost at which they could produce their goods would enable them to sell in foreign markets and still pay high wages.

92. The writer is far from taking the view held by many manufacturers that labor unions are an almost unmitigated detriment to those who join them, as well as to employers and the general public.

The labor unions—particularly the trades unions of England—have rendered a great service not only to their members, but to the world, in shortening the hours of labor and in modifying the hardships and improving the conditions of wage-workers.

In the writer's judgment the system of treating with labor unions would seem to occupy a middle position among the various methods of adjusting the relations between employers and men.

When employers herd their men together in classes, pay all of each class the same wages, and offer none of them any inducements to work harder or do better than the average, the only remedy for the men lies in combination; and frequently the only possible answer to encroachments on the part of their employers is a strike.

This state of affairs is far from satisfactory to either employers or men, and the writer believes the system of regulating the wages and conditions of employment of whole classes of men by conference and agreement between the leaders, unions, and manufacturers to be vastly inferior, both in its moral effect on the men and on the material interests of both parties, to the plan of stimulating each workman's ambition by paying him according to his individual worth, and without limiting him to the rate of work or pay of the average of his class.

93. The level of the great mass of the world's labor has been, and must continue to be, regulated by causes so many and so complex as to be at best but dimly recognized.

The utmost effect of any system, whether of management,

Digitized by Google

social combination, or legislation, can be but to raise a small ripple or wave of prosperity above the surrounding level, and the greatest hope of the writer is that, here and there, a few workmen, with their employers, may be helped, through this system, toward the crest of the wave.

DISCUSSION.

Mr. H. L. Gantt.—One cannot read Mr. Taylor's admirable paper on "A Piece-Rate System" without realizing that it contains vastly more than the title suggests. It is really a system by which the employer attempts to do justice to the employee, and in return requires the employee to be honest.

His method of fixing rates by elements eliminates, as nearly as possible, all chance of error, and his differential rates go a long way toward harmonizing interests of employer and employee.

It was my good fortune to work for a year as his assistant in this work, and I fully agree with him as to the effect on the men. They improve under it, both in honesty and efficiency, more than I have ever seen them do elsewhere. Realizing that substantial justice was being done, and that to do their duty was to follow their own interest, it soon became a matter of habit with them.

The greatest obstacle in the way of adopting this system is that the man in charge of the rate-fixing department must be a man of more than ordinary ability, and should have had a very wide experience. To err in fixing a rate has a very bad effect upon the men, who should never have reason to think that the element of "guess" occurs in their rate. It is therefore only in a comparatively very large establishment, where a capable man can be employed to give his time to this work, or in a very small one, where the superintendent can give it his personal attention, that the plan is entirely applicable.

His idea of a hand-book on the speed with which work can be done, similar to the elementary engineering hand-books, is one which is bound to interest all progressive engineers, and I hope that he will see that his predictions about such a book do not fail.

In paragraph 15 he states that a clerk in the factory is the particular horror of the old-time manufacturer. Why is this? In many cases the manufacturer is a shrewd and successful man, and if so, why has he not seen the advantage of using a clerk in connection with his foreman?

Digitized by Google

This takes us back to the advantages of a system. No matter how successful a system may be in one shop, modifications are always required to make it equally successful in any other. No shop should be run to suit the demands of a system, but the system must be modified to suit the demands of the shop. No system is a success unless it makes work go more smoothly and cheaply, and ultimately makes the proper running of a shop independent of any particular man.

The fact that most ready-made systems fail in almost all of these respects makes the shrewd, old-style manager fight shy of them, and regard any approximation to them as a needless expense.

To pay men what they are worth requires that we keep accurate records of their work, and as the foreman is too valuable a man to be used as a clerk, he should have this work done for him, and be free to give his entire time to his men and the work.

Finally, the ideal system must be automatic and self-contained. It must be so simple as to appeal to those working under it, and should impose checks in such a way as to prevent or correct errors without the interference of the superintendent, or of any one not directly connected with doing the work under it, and, above all, it should be free as possible from "red tape."

Mr. F. A. Halsey.—Mr. Taylor's paper points out that in cases where the machine cost exceeds the wages paid, a piece-rate which increases with the output may be compatible with reduced cost, as the output advances. Simple as is the idea, it is, I must own, new to me, and it may be admitted at once that in such cases the advancing piece-rate is justifiable, *provided the maximum output cannot be obtained without it.* In the average case, however, where the wages paid exceed the machine cost, the condition no longer holds, and the advancing piece-rate would involve an increased cost, as an accompaniment of an enlarged output.

It was under the condition of a moderate tool cost that my Premium Plan (see vol. xii., page 755, of the *Transactions*) was devised, and its application, under a high tool cost, was not considered, the fundamental idea being that the workman's earnings *per piece* should decrease (though per day increase) as the output increased. By reference to my paper on the Premium Plan it will be seen that the need of different premium rates to cover different conditions was clearly recognized, and while such a development was not contemplated, it is plain that there is nothing to prevent making the premium rate so high as to give the work-

Digitized by Google

man a wage which increases faster than the output, *if the conditions are such as to make that course necessary* to secure the maximum output.

It thus seems to me that, while Mr. Taylor's plan is applicable only to the condition of high tool cost, the Premium Plan not only applies to the condition of low tool cost, for which it was planned, but to the condition of high tool cost as well. There are not many shops in which the maintenance of every tool costs more than the wages of its operator—the tools falling under that class being usually in the small minority. Mr. Taylor's system being economically applicable only to the larger tools, it would seem necessary, if the best results are to be obtained, to apply it only to such large tools, and use some other system for the smaller ones. With the Premium Plan, the same system, as has been shown, applies to all, and its advantage in requiring only one system of time and cost keeping against two, with Mr. Taylor's system, is apparent.

Is it clear, however, that a wage rate which advances faster than the output is necessary in any case? The only system which will endure is the one which pays the least possible per piece of product. The purpose of these systems is not, primarily, to pay high wages, but to produce cheap work, the adjustment sought being one which shall give the workman an increased wage *per day* in return for a decreased cost *per piece* of product. In my experience, a comparatively small premium will call out a workman's best efforts, provided the work is not too laborious, and the workman is *assured against future cuts in the rate.* Why should this not be the case with large and expensive tools as well as small ones, and, if true, why should the wages increase faster than the product, even on large tools?

Mr. Taylor's strictures on the piece-work plan have my cordial approval, but what is the fundamental difficulty with piece-work? Simply that the output under it is always found to be larger than anticipated, and a rate which seemed moderate before trial is found to be excessive after trial. The workman's earnings, increasing *pro rata* with the product, soon get to be excessive, unless he has acquired wisdom and restrains himself. In Mr. Taylor's system, the earnings under an increase of product increase still faster than with piece-work, and the consequences of a too high rate would be even more serious than with piece-work. Wherein, then, does the superiority of Mr. Taylor's system over piece-work

Digitized by Google

lie? *Not in the advancing piece-rate, but in the method of fixing rates.* If Mr. Taylor can determine the maximum output of the miscellaneous pieces of work comprised in the everyday operation of the average machine-shop, he has accomplished a great work, and the present paper should be followed at once by another, giving the fullest possible details of his method. It is this universal difficulty of determining the possible output which is at the bottom of the difficulties besetting the piece-work plan, and it was its contemplation which led the writer's thoughts to the Premium Plan. With that plan, the attempt to determine the possible output is abandoned. Present output is taken as the basis, and if the premiums offered for an increase are small, as they should usually be, no possible increase of output can carry the workman's earnings beyond reason. It is its extreme flexibility and the absence of danger of expensive errors of judgment which chiefly commend the Premium Plan, and while it is impossible to judge Mr. Taylor's method of fixing rates with the present knowledge of it, I must say that it is hard to conceive anything so simple or safe as the plan offered by me.

Still another point presents itself. When piece-work is introduced in place of day's work, the rate offered is usually less than the work previously cost. The workmen often object, as few of them know the real capacity of the tools, and the system is only introduced by the exercise of some coercion on the part of the employer. Nevertheless these first rates are eventually found to be too high, and a really large output is only reached after several successive cuts. Now, if the final output is to be determined at once by Mr. Taylor's method, and the rates fixed in accordance, is not still greater opposition on the part of the men to be expected? The maximum output is usually and necessarily a matter of growth. With Mr. Taylor's plan there must intervene a period of low pay. The outcome is uncertain to the workmen. They are full of distrust, and can they be blamed if they rebel? Right here, again, the merits of the Premium Plan are conspicuous. There is no cut at its introduction; on the contrary, present output is taken as the basis, and the workman is offered an increased wage if he will increase the output. The result is satisfaction from the start, and increasing satisfaction as time goes on. Nothing can be simpler, fairer, or plainer, and nothing can meet all the varied conditions more perfectly.

Mr. F. W. Taylor.—In Mr. Halsey's criticism of my piece-rate

Digitized by Google

system, he very justly lays great weight on the elementary rate-fixing as the most important part of the system. An accurate knowledge of the quickest time in which each job can be done is the very foundation upon which the differential rate rests, and without this knowledge the whole system must fall to the ground.

Mr. Halsey is in error, however, in his assumption that my system of piece-work involves paying a higher price per piece than is paid under the ordinary system. On the contrary, with the differential rate the price will, in nine cases out of ten, be much lower than would be paid per piece either under the ordinary piece-work plan or on day's work. An illustration of this fact can be seen by referring to paragraphs 79 to 83 of the paper, in which it will be found that a piece of work for which the workmen had received for years, under the ordinary piece-work system, 50 cents per piece, was done under my system for 35 cents per piece, while in this case the workmen earned $3.50 per day, when they had formerly made, under the 50-cent rate, only $2.25 per day.

It is quite true that under the differential rate the workmen earn higher wages than under other systems, but it is not that they get a higher price per piece, but because they work much harder, since they feel that they can let themselves out to the fullest extent, without danger of going against their own interests in the long run. What I said in the paper was that the management could *well afford* to pay a higher price per piece, to insure the maximum possible output, not that it was necessary to do so. Mr. Halsey is right in saying that there is sometimes difficulty in introducing the differential rate, owing to the great and sudden increase in speed which is demanded of the workmen. This is particularly true of the first few cases in which the system is applied in a new establishment—*C'est le premier pas qui coute*—and much tact and skill is sometimes required to get the men to accept and work under the first rate. After the system, however, once has a start in a place, on however small a scale, the workmen are quite as quick to recognize its merits from their standpoint as the management are from theirs.

Mr. Halsey's is by far the best of the ordinary systems of piece-work, yet, even under his system, there still remains what to my mind is the very weakest point of all the ordinary systems, and what may be called, almost, the curse of modern industrial management, namely, *that it is for the workman's interest to*

Digitized by Google

"*soldier*" *and go as slowly as possible on each new piece of work that comes along*, so as to get as high a price per piece as possible when piece-work first starts; and for this reason, even after piece-work has been inaugurated, under Mr. Halsey's plan, there is almost necessarily a great lack of justice in the prices fixed for different jobs, since the starting-point from which the first rate is fixed is unequal and unjust. Some of the rates may have resulted from records obtained when a good man was working close to his maximum speed, while others are based on the performance of a medium man, at one-third or one-quarter speed, and from this follows a great inequality and injustice in the reward of even the same man when at work on different jobs.

Other defects of Mr. Halsey's plan, and which are corrected by my system, are:

First. That it is slow and irregular in its operation in reducing costs, being dependent upon the whims of the men working under it.

Second. That it fails to especially attract first-class men and discourage inferior men.

Third. That it does not automatically insure the maximum output of the establishment per man and per machine.

*Mr. John A. Penton.**—Although I am not a member of the Society, I want to thank you for the privilege of just saying a word. The paper we have just listened to and the presentation made by Mr. Taylor strike me as being perhaps the most remarkable thing of its kind I ever heard in my life. I do not wish to say anything about its merits, or demerits, if it has any. My knowledge of it is altogether too superficial to admit of anything of that sort; but I can sympathize with every word he said, for the reason that fortunately, or perhaps unfortunately, I was for five years at one time occupying the position of president of a very large organization, which would be called a labor organization, prominently identified with the iron business. With us, the treatment of this piece-work problem was something which, even now as I think of it, causes me to shudder and to feel a little nervous; and when I think of the problems which might be solved by this paper presented by Mr. Taylor—such a one, for instance, as was solved by the military at Homestead a year or two ago—when I think of all those things, and of the numberless

* Formerly President of the Brotherhood of Machine Moulders, present by invitation.

Digitized by Google

instances which occur almost every year, I feel that, as a workman, I want to congratulate Mr. Taylor and to say that his paper, I think, is a landmark in the field of political economy; and, as all our leading thinkers have devoted their time in the last few years to solving problems of that kind, I feel that the paper he has written is worthy of the greatest consideration at the hands of every employer, and at the hands, also, of the employee. It seems to me that every sentence, almost, might form a text for an article. It certainly enunciates a number of logical ideas, and I feel that I would like to go before the American Society of Mechanical Engineers, and, as a workman, testify to my feelings in the matter.

Mr. W. S. Rogers.—It is strange how we meet old faces once in a while. In 1883, in the State of Ohio, I had charge of men, and that identical plan of a differential piece-price came into my head. I was not near as old then as I am now, but I recognize, also, the fact that I am not talking to students now. I am talking to men who know more than I do of how to handle men. A very capable member of this association, who is now dead (Captain Minot), was a particular friend of mine, and I laid this plan before him. He said: "Do you believe in it?" I said: "I think that is just the thing to fetch my shop right down to where it ought to be." He said: "Try it." He went by my shop to and fro to his, and he would stop occasionally and say: "Rogers, how is the differential working?" At first I was enthusiastic. At the end of six weeks, he said: "Rogers, what do you think of the differential?" I said: "Captain, I feel like a thief; it isn't honest. There are times when a man cannot turn out as much work to-day as he did yesterday, and it is not his fault; the fault lies sometimes in the foundry or elsewhere, and the man is not to blame, but I have got to live up to my rules and cut the price." "Well," he said, "I thought you would feel that way, and I have been feeling that way for you." Then I abolished it. At the Providence meeting, Mr. Halsey read a paper on the Premium Sharing Plan. I have tried it three times since. I have a friend of mine trying it. I am trying that in the shop where I am to-day, and it is simple and easy, and the men ask for it. You cannot give it to them fast enough, and you do not require a rate fixer. Now, as to cutting prices and cutting rates, I know an instance that occurred not long ago. A man took charge of a shop, and not ten days after he went there he slapped it on to

Digitized by Google

piece-work. To-day he is looking for another situation and the firm is cutting the men. You cannot pass to piece-work instantly, or anything else, until you thoroughly understand the whole situation; and you have got to throw your hobbies and ideas to the winds and be governed by what you find and the men you find. A short time ago a man applied at our place for work. I make it a point, if possible, to hire every man. He said he was a machinist. He asked what wages he would get. I said: "That depends on you; your rate will not be fixed for one week." I asked where he was from. He replied that he was glad to get away from a place where the differential system was in operation.

Mr. F. W. Taylor.—I must object to Mr. Rogers saying that he tried my system of piece-work; for, according to his own statement, he entirely omitted the vital part of my plan, namely, the elementary rate-fixing, without which the differential rate must, in most cases, prove a failure. He, however, says that he only tried differential rates for six weeks, which, in point of fact, is no trial whatever. If he had tried the plan for six years or even six months, and abandoned it, his experience might have some weight, but six weeks counts for nothing. Regarding his statement that his workman was glad to get away from my system, all that I need say is that about a thousand of the most intelligent, most prosperous, and contented workmen in the country are working there under this system, and a majority of these men have been in the employ of the company for more than ten years, without complaint about the system, and without a strike or even the talk of a strike. Can Mr. Rogers say as much regarding the workmen of any other steel works in the country?

Mr. Wm. Kent.—I am very glad that Mr. Rogers has attacked Mr. Taylor's paper. There are very few men who have the courage to do it. I hope there will be others who will rise up and attack it, and I know of no man stronger than Mr. Taylor to repel such attacks. He is just the kind of man to stand a good deal of hammering, but sometimes I think he may come out on top.

In regard to Mr. Halsey's plan, which Mr. Rogers has indorsed, I had the pleasure some years ago of indorsing it also, and I think I was possibly the first one to put it on trial, because Mr. Halsey had told me about it two or three years before he published his paper. So far as I know, the plan has been an entire

Digitized by Google

success. But my opinion is that Mr. Taylor's plan is a little ahead. It is probably a little better, provided it is carried out with proper intelligence, by the right men, with proper sense of generous treatment of their workmen. I regard this whole question, which was started, possibly, by Mr. Towne, in his paper, then continued by Mr. Halsey, and now supplemented by Mr. Taylor's paper, as one of the most important questions, not only before this Society, but before the world to-day—the harmonizing of labor and capital; and this question is not to be settled by the opinion of the old-time mechanics, such as my young friend who has spoken. It is to be settled, after a profound study, by men capable of logical analysis, and by students of political economy, and I do not expect that we are going to introduce any of these systems, in any great degree, by the men who are now over fifty years of age, who have all their old-time prejudices; but I think it will be from such men as the one who presented those opening remarks, such as Mr. Gantt, a young man, a technical graduate, who has given some attention not only to workshop matters, but to political economy, and that such men will be the ones who will introduce this system in the long run. I hope to see this subject of workshop economics taught as an inductive science from actual statistics—statistics of tool cutting, of wages, of rates, in the modern method of studying political economy; that this science must be taught in our technical schools, and that our graduates will graduate, not with the knowledge of how to apply this system, but with minds trained to begin studying the system in practice, and gradually the proper system for our shops will be evolved. I heartily congratulate Mr. Taylor on the paper he has presented, and hope he will continue his studies for a great many years to come in this direction.

Mr. D. L. Barnes.—I would like to ask Mr. Taylor a question about a matter upon which he has not entered in his paper. How does he deal with the apprentice system? A good apprentice will often do as much work as a journeyman. Now, is he to get the same price? The temptation for the manufacturer is to use as many apprentices as possible. How are disputes about apprentices with labor organizations to be settled? That, to my mind, is the most important problem with which a manufacturer has to deal, when the work is such that an apprentice can do it.

The plan proposed by Mr. Taylor is applicable in a shop where

Digitized by Google

the profit is great and where there is an unlimited amount of orders to work on. But suppose the contract price is fixed, and the orders are not very frequent, and the profits small; can a man afford to pay more for extra quality work than for what will pass as good work? It seems to me that the manufacturer can afford, under those conditions, to pay only one price, and that is to get work good enough to pass inspection, and how the differential rate system can be applied under those circumstances I do not see.

Mr. Taylor.—The answer to that is this: With regard to apprentices, in the first place, the Midvale Steel Company takes no regular apprentices, in the old-fashioned meaning of the term, but they do take a great many boys, young men, and even older laborers, and teach them trades, and when I was there I treated my apprentices or learners just as I would the other men. I let them earn all that they could earn, and I was delighted to have them do it. I do not care who turns out my work. So much work is worth so much money, whether done by an apprentice or by a man just tottering to the grave. With all due respect to Mr. Barnes, the apprentices or learners are not able to do, in my experience, anything like as much work as the first-class trained workmen are able to do, and under the differential rate system they must be content with the lower price per piece. They, however, always have the higher price per piece before them as a goal, to spur them on to become fast and accurate workmen, and the system has certainly worked admirably in this respect, since I should say that fully two-thirds of the skilled workmen of the place have been taught their trades right there in the steel works.

As to the second matter referred to by Mr. Barnes, namely, the applicability of the differential rate to a shop which did not have sufficient work to completely occupy all of its tools; if the differential rate system involved paying a higher price per piece than is paid under other systems—that is, if you had to pay with the differential rate actually a higher price for a piece than your competitors pay—then Mr. Barnes is perfectly right in saying that in a shop which runs slack of work this could not be done. As I have already explained in answering Mr. Halsey, however, in most cases where the differential rate is applied your actual piece-work rate is lower than your competitor's price is, so that you have the advantage not only of a larger productivity per tool, but also a lower price per piece.

Mr. Rogers.—Mr. Barnes touched on the apprenticeship ques-

Digitized by Google

tion, and I want to air myself a little on that subject. It is a nice thing to sit here and talk on these subjects, but when we get into the shop, into the cold-blooded grind of practice, it is totally different. Now, I do not believe an apprentice has any business in the Midvale Steel Works any more than he has in the works where I am. An apprentice goes in and contracts with his employer, and the employer is to teach him the business. When an apprentice comes into our works, I cannot conscientiously arrange to have that man spend three months on the miller, four months on the vice, on the big planer, on the boring mills, teaching him how to run all those things and how to become a first-class mechanic. If I do, I turn that shop into an educational institution and the firm loses. If I put the man where he belongs and keep him there, and make him good at one particular point, I am dishonest toward him. He works three or four years, and his time is up. I cannot afford to pay him what a good mechanic is worth, and he goes to the next shop—in some other town. "Where are you from?" "So-and-so's steam-pump works," and the first day he is fired out for spoiling a job, and they say, That is the kind of work they turn out up there. The apprentice belongs only in a shop where he works to-day on a sewing machine and to-morrow on something else. Our shop is not a machine-shop; it is a factory, a manufacturing establishment, just the same as the Midvale Works, and an apprentice has no business in either.

Mr. Gustavus C. Henning.—I would like to add a few words in commendation of Mr. Taylor's paper, not because I have been an employer of labor, but simply because I have suffered from being in intimate connection with unsatisfied laborers. I found that, in shops where the old-fashioned piece-rate was in vogue, every time a man did a good piece of work his wages were cut down. They would induce a man to turn out the work on the plea that it had to go out in a hurry, and just as soon as his amount of work increased his rate was cut down, so that he was always kept to earn about the same amount of money per day. I remember one case where this had a very important effect on the character of the work. It was driving rivets. The men were driving originally about 2,500 steel rivets, with hydraulic riveters, by contract, but they earned so much money at the rate they were getting that before the next lot of similar work was contracted for a lower rate was offered, and the men had to drive 3,500 instead of 2,500. The first trouble that arose was that 90 per cent. of the rivets

Digitized by Google

were not absolutely tight. Then the shop began to question the propriety of the inspector marking all the loose rivets, because most of them could only be shown to be loose by tapping them on both sides of the head, but if tapped on one side only they would rarely show a defect. Then the men were made to cut out this work at their own expense and put in new rivets, the shop paying for the new rivets, but the labor was found by the riveting gang, and they lost money. Then the power for driving the rivets was increased, improving the work very much. The men actually succeeded in running up their capacity to about 4,500 rivets per 10 hours, but there were so many loose ones in the work that the men, of themselves, discarded the use of steel rivets, although it was prescribed by the specifications, and used iron rivets, because they could be driven tighter. Then, when the objection was made that the contract called for steel rivets, heaven and earth were raised to prevent the reintroduction of steel rivets, and the work was shipped one hundred and twenty-six miles, with these wrought-iron rivets in place, and it was only after the severest fight that they were compelled to cut out about 3,000 iron rivets in the field and replace them by steel, simply to make the contractors understand that they would have to carry out their agreement. That was all caused by the piece-rate system. If such a system as this had been in use, such a thing could never have occurred. Those men were trying to do their best, but by doing their best they were compelled to work harder and were getting less and less pay; the work was inferior to what it was when the men were getting less pay and turning out less. I think, if such a system as Mr. Taylor here describes can be carried out on any work in hand, and arranged to suit the particular shop in which it is to be introduced, it would certainly improve the work, increase the capacity, and make the general relation between employer and employee a far more satisfactory one than it is in many of our works at the present day.

Mr. C. E. Bement.—I would like to ask Mr. Taylor a question or two. Do I understand that when the maximum day's work is fixed, it is never changed?

Mr. Taylor.—When, by the elementary rate-fixing, you have found out what a maximum day's work is, for instance, on a lathe or a planer, on a certain class of work, that rate is never changed until some new element enters the problem; that is, until you

Digitized by Google

have a distinctly new method of doing the work. If you invent a new tool which will turn out more work, or if the machine heretofore used is materially improved or better speeded, etc., then the rate is altered; but while the conditions remain the same as originally, and after a careful and thorough analysis has been made of the quickest time in which the job can be done, that rate is never cut; that rate remains permanent until a material change takes place in the rate of wages paid throughout the country—such a change, for example, as occurred very generally in the rate of wages paid in 1893. At this time, the rate of wages paid under differential rates was cut, and the men did not complain of the cut. They saw the justice of it.

Mr. Bement.—Suppose, in ordinary piece-work, the same pains was taken and the piece-work price was fixed on that basis, wouldn't that be as just as your system? You fix a day's work which you calculate is the greatest that the machine or man can turn out. Now, suppose in an ordinary piece-work shop, such as I am running, we fix a piece-work price based on a maximum day's work, why is not that as just a price, provided the same pains is taken to fix it?

Mr. Taylor.—If you can once persuade your men that you are really going to allow them to earn more than the usual standard of wages no differential is essential; that is to say, it is not then nearly as necessary as it usually is. I think I said distinctly in the paper that, after your men are thoroughly in accord with the management and you are all pulling together, it is possible to drop the differential rate without a great sacrifice of the amount of your product, but even then you will make a sacrifice of possibly 10, 15, or 20 per cent. of your product, because the incentive of earning his differential is lacking to make each man work to his maximum. The case is very much like running a race—if there is no goal to reach, if each man can go at any rate of speed to suit himself, they will not go as fast as they will if they have got to get to the tape at a certain time, or else forfeit their premium. That is the incentive of the differential rate. What I did not speak of and what is of equal importance is, that it spurs the firm to keep their shop in the best of order. Everything must be kept up in the finest state of repair, or the men cannot earn their differential rate, and I think, if possible, that this indirect result of the system is a greater benefit to the firm than the rate is itself.

Digitized by Google

Mr. Rogers.—This gentleman's question and Mr. Taylor's answer make the thing clear to me now. This differential rate is really a punishment inflicted on a man when he does not attain the high standard fixed—the maximum standard—in the quality of the workmanship. As long as he does that he receives no punishment, but when he fails, he is punished under the disguise of a differential rate.

Mr. Platt.—I would like to ask Mr. Taylor whether the price is set at what might be called the highest possible efficiency. For instance, in the case of turning tires, the rate is put down at 35 cents if 10 tires are turned, and at 25 cents if less than 10 are turned. Now, is 10 all that it is possible for a man to do, or would he ever get out 12?

Mr. Taylor.—The case referred to in the paper was not that of turning tires. In this case, however, I have known one man to get out 11 pieces in the whole course of years of work. That is the most that has ever been done in a day.

Mr. Platt.—Concerning the highest price, it seems to me that some have overlooked the fact that it is an advantage to the works to have the men turn out as much as possible, because it costs just as much for fixed charges, whether the tool turns out 5 pieces or 10. On page 879 of this paper, the "machine cost," which I suppose includes all kinds of fixed charges, is given at $3.37 per day. That is $33\frac{7}{10}$ cents on 10 pieces, and $67\frac{4}{10}$ cents on 5 pieces, a difference of $33\frac{7}{10}$ cents. That is a very good profit on some pieces. On that account, I think it is desirable to let the men know that you know how much it is possible to do. I have been on both sides of this question, and I do not take wholly either the side which Mr. Rogers takes or the side that Mr. Taylor takes. I must say that I lean a good deal more toward Mr. Taylor than toward Mr. Rogers. I never had any difficulty in instituting the piece-rate price.

Allusion has been made to apprentices. I had experience for a number of years with a "bonus" system, which worked admirably, and in which there was a prize—not a forfeit—in case the boy did his work properly. Starting in at 50 cents a day, we worked up to $1.25. We advanced wages every six months, and credited a bonus to those who did their work properly. At the end of four years, or whatever the time was, they were paid what had accumulated. If one came in two or three days before the term was up, and wanted a little of the bonus money, it was

Digitized by Google

refused, and they were told, "If you come here after six o'clock on the last night of the apprenticeship you will get your bonus, but if meanwhile you maliciously spoil a machine, you will forfeit the whole bonus." The consequence was that the boys took their $100 or $145 when the time was up, put some of it in the savings bank, and became some of the best workmen in the shops. I do not believe there is anything in this world that we work for except reward and the fear of punishment.

Mr. J. L. Gobeille.—This paper is especially interesting, since our moral responsibility toward those in our employ is so prominent a feature of this discussion. In a certain concern, twenty men were displaced by that number of women, the output of both being practically the same. Now, the average pay of these women was much less, perhaps one-half what the men had earned.

While we are discussing ethics and morals, the question comes to me whether it is right to put those women in at the highest rate they had previously earned, and thus save an equal sum for the department, or whether they should have been paid, as Mr. Taylor paid his apprentices, equal pay for equal work. Apprenticeship, by the way, is a back number and a lost art, except in shops in small country towns, and they do not pay the same rate as men get per unit of work.

Seriously, I believe the "woman question" will be prominently before the Society in a few years. In a little while women will be running all the lighter tools in machine-shops and factories. This is certainly coming. I am doing it and others must come to it.

Believing that our first duty is to the workman, and profit on the investment a secondary consideration, what discrimination, if any, shall we make between men and women, without, perhaps, in every instance taking the high moral ground that Mr. Rogers esteems so important in running a factory?

Mr. J. F. Holloway.—Feeling that I may possibly claim a place in that class known as old-time mechanics, I would like to say a few words on the matter under discussion. It certainly does commend itself to all thoughtful and well-meaning persons, that there should be some method provided by which workmen could obtain a better rate for what they do, and, at the same time, that proprietors should make more money out of it. Whenever that can be accomplished, it certainly will be a long step in advance. It seems to me that, in these latter days, so many combinations and so many differences have come up that it is exceedingly difficult

Digitized by Google

to see how this may be brought about. The changed conditions in manufacturing, especially in the line of manufacturing with which most of us are connected, that of machinery, are so different from what they were years ago that they have brought in new complications. As Mr. Gobeille has well said, he doesn't know where the apprentices are to-day. I myself hardly know where you will find apprentices. When Mr. Rogers and I were boys, the apprentices were in small shops. The machine shops of this country were individual shops; they were owned by the man who operated them, or by a small partnership, and the apprentice had the privilege, the inestimable privilege, of living in the family, of getting up in the early morning and making the fire, milking the cow, and taking care of the horse, before he went to work in the shop. There was a certain community of feeling, in those days, between the boys in the shop and the master, which I think passed away when machine-shop owners became corporations, when they were managed by a board of directors who never saw the workmen, who knew nothing of them, individually, and, as I fear, cared less.

It is unfortunate in many ways that there should have been that sort of a diversion of interests, that sort of almost antagonism which has grown up in these latter years between workmen and their employers, and often for the reason that they do not know who their employers are. They know the superintendent of the works, and they know their foreman, and they have a slight acquaintance with the paymaster, through the medium of their check number, but over and beyond that they do not know who they work for. They never come in contact with the owners, and that sort of human contact which is so essential to good feeling, as Mr. Taylor has well observed, is not now prominent. The directors look only at the balance sheet. If the affairs of the company have been well managed, or the state of the market has been such as to enable them to show good balance sheets, then there is nothing said; but if unfortunate contracts have been made, or if the market prices have gone down and the balance is on the wrong side of the ledger, the directors, meeting in solemn conclave, say, Well, we have got to cut the workmen, and they do so; and in doing that there has grown up, as I say, a sort of antagonism between workmen and employers which is exceedingly unfortunate for both. If any way can be devised by which this can be remedied, it will be certainly an advantage to each. So

Digitized by Google

far as the intent of the paper is concerned, and so far as the many good things in it are concerned, I heartily commend it, and I am very glad, indeed, to have listened to it. I am very glad, indeed, to know that there are gentlemen in the profession of engineering who are thinking and studying about the social side of these questions, and I am in hopes that something may come out of it which may be of mutual benefit. There are other elements which have come into existence in latter years which have been, I think, equally harmful. Among them are organizations, ostensibly for the benefit of the workman and possibly in some ways truly so. In many instances they have assumed to do the workman's thinking. They have assumed to take care of the workman, as they say, but unfortunately, in many cases, the men who have thus assumed to take care of the workmen are not the men who should have been put in the place of leaders, and it is, unfortunately, often for this reason that strikes arise, that divisions take place. There has grown up a feeling that one man shall have the same pay as another man, irrespective of his skill, experience, or industry. I think that is unfortunate, because it detracts from the energy and from the industry and from the ambition of a good man. These associations, which I am quite willing to believe were intentionally well-meant, and designed for the welfare of the workmen, compel certain things which I am certain do not in the end conduce to their advantage, because it brings all men to one lower level. No matter how good workmen they may be, no matter how industrious they may be, no matter how ambitious they may be to get a home for themselves and their family, they are tied down to one common grade and they are controlled often by one person, so that the individual liberty of the workman to-day is wanting.

As to the matter of apprentices and as to the matter of pay that they may get, I would say that the work of to-day is done largely by special machinery. I can hardly agree with my friend Mr. Rogers in his suggestion, elsewhere made at this meeting, that we should do away with all engine lathes, and throw them into the scrap heap; but it is true that the special machines of to-day largely supplement the industry and the intelligence of the workman. A bright young fellow, without any previous mechanical training, can go into almost any establishment and go on almost any machine, and with industry and application he can in a very short time do just as much as a skilled workman on that

Digitized by Google

machine. In fact, the term skilled workman is now a very indefinite term. He may be a skilled workman on a slotting machine, or a shaper, or milling machine, but the true skilled workman, whom you could send anywhere to do anything, and who could accomplish it with few or no tools, is sadly wanting. So I can hardly see how you can manage the apprentice part of any system so long as there are no longer any apprentices to apply it to.

Mr. Chas. H. Norton.—I do not feel competent to discuss this paper, although my sympathies are with Mr. Taylor, and I believe his sympathies are with the right in this matter. About the apprentice question—Mr. Rogers says that apprentices have no business in a prosperous shop; that we cannot make money and run an educational institution; that is the way I interpret him. Now, if you were in my office I could show you a picture of some 60 or 80 apprentices; that picture was taken in their lecture-room, and the concern they worked for is probably the most prosperous machinery concern in the world. It is managed mostly on the day-work system, but the personal element of the manager has probably most to do with it. If our educational institutions could "*bring up*" mechanics, and educate into them the right personal elements to fit them to manage workmen *as men*, as Mr. Taylor says, such ability on the part of managers will bring success with any reasonable plan. The concern I refer to is the Brown & Sharpe Manufacturing Company, employing at one time 1,200 men. They have got 60 or 80 apprentices, and those apprentices are apparently happy, and they take a good deal of pride in their institution; as you see them in their lecture-room every week and somebody to talk to them there—in the establishment or from outside—you will see that they are enjoying it and they are learning something. And that concern is probably making as good a profit as any machinery concern in the world, and the profit is coming along with that "educational institution."

Mr. W. R. Warner.—There are quite a number of large manufactories where the apprentice system has been very successfully carried out. The firm in which I am interested often receive letters of application for positions from East and West and all around, and it is not a rare occurrence for the letter to begin with the statement that the writer served an apprenticeship with the Brown & Sharpe Company or with the Pratt & Whitney Com-

Digitized by Google

pany, and the fact is that that is the best recommendation that these young men can have. Being able to state that fact is equivalent to securing them work, and as a result it is very seldom that a person makes application to our shop who has ever learned a trade in those companies, because they have employment continually; they do not get out of a job, and when they wish to change, all they have to do is to write to this, that, and the other firm, and work is offered them at once. Now, I am familiar with the system to which Mr. Norton has referred with the Brown & Sharpe Company, and also with the Pratt & Whitney Company, and I want to say that if a census of both those concerns were taken, you would find that nearly all the foremen or managers or chief draughtsmen were apprentices for those companies. This is an illustration, and pardon me for making it a personal one. The firm in which I am interested has as its superintendent a young man who learned the trade with us. We have as our chief draughtsman a young man who learned the trade with us. We have as our leading foremen, all through the establishment, young men who learned the trade with us. They are better than any we can hire. Just a word of encouragement for those apprentices. Take the Brown & Sharpe Company or the Pratt & Whitney Company. They supply their draughting-room with their best apprentices. It is a special reward of merit for any apprentice to secure entrance into the draughting-room. As a result these concerns never go outside to hire draughtsmen, because they have those among their own men who know their methods of construction, who understand all their system, and that is more than any outsider can possibly understand. A few weeks ago we needed a draughtsman. The superintendent said he was going to look over the young men in the shop and find who was the best one. Never for a moment did he think of going outside and hiring a draughtsman. But he went among the best workmen, and picked out one who was the most efficient when he was in the draughting-room. When we want a boy in the draughting-room, first beginning to trace drawings, and make blue-prints, and finally designing, we find the best boy who has made the best record, intellectually and morally and every other way, in his work in the shop, and as a special reward of merit that fellow is put in the draughting-room and given six months there. If he uses his opportunities he will, by the time he finishes his

Digitized by Google

apprenticeship, be not only an excellent machinist, but a draughtsman and designer, and many such are being turned out every year in these large concerns down East. If you go among the shops in Chicago or the Western States you find in almost every one of them a few Pratt & Whitney men and a few Brown & Sharpe men. They have left the parent concern with the education they received there, and they are taking these leading positions in those large manufacturing concerns in the West. Now, most of those men I have referred to have not received a technical education. Doubtless, all would have succeeded better had they received a technical education. In a shop I know well, a young man who came from the woods of Maine is now superintendent, and has had under him for two years a professor of civil engineering who has taught in the colleges for twelve years, and still he has been under this backwoods boy, getting less than half the salary he receives, simply because, with his technical education, he has not come up to the standard which this other one had attained without it. I ought to qualify this remark simply to say that I do not in any way undervalue the technical education, but I state this to show how young men who came up from the ranks have, in spite of that drawback, gained ground every year, and come forward and developed qualities for commanding men, qualities for working out difficult engineering problems. One of the most important of those qualities is the qualification for managing men, and it is one department which I believe all colleges in the future will organize, with special methods. The colleges teach the rules in the books, they teach the engineering rules, but one of the most important things for any young man to learn is diplomacy, executive ability. It may all be summed up, perhaps, in those two words. Now, he can learn that in a large establishment like Pratt & Whitney's or Brown & Sharpe's, but never could he learn that in a college. It is one of the elements and qualifications which is most important and most essential in the education of any young engineer. I am glad to tell Mr. Rogers that these large companies down East are still keeping up the apprentice system, and the companies throughout the country are receiving good superintendents, who come from Brown & Sharpe and Pratt & Whitney and other similar institutions.

*Mr. F. W. Taylor.**—I am much surprised and disappointed

* Author's closure, under the Rules.

Digitized by Google

that the elementary rate-fixing has not received more attention during the discussion. No better evidence could have been produced, however, of the crude and elementary state in which the art now stands, of determining the time to do work and of fixing rates, than that only one member of the engineering Society which is in the closest touch with the manufacturers of the country should have most briefiy referred to the matter, while thirteen engineers have discussed at length the less important matter of what kind of piece-work to use.

I am, nevertheless, most firmly convinced that the question of scientific rate-fixing must occupy more and more of the attention of manufacturers in the future. Competition will force the subject upon them.

I think that this will prove a most fruitful field for investigation for young engineers in the future.

Digitized by Google

DCXLVIII.*

THE EFFECT OF LENGTH OF SPECIMEN ON THE PERCENTAGE OF EXTENSION.

BY R. C. CARPENTER, ITHACA, N. Y.

(Member of the Society.)

IN making tests, during the past season, of steel to be used in boiler construction, to determine whether or not certain specifications as to strength and ductility were complied with, the writer found that in most cases no requirement for the length of specimen from which the tests were to be made was included in the specifications, and that the practice among different manufacturers, as to the length of the test specimen, varied considerably with circumstances.

In making the tests the extension was in all cases measured after the rupture had occurred, allowing, when necessary, for eccentric fracture, by the method given at length in vol. xi., page 621, of the *Transactions* of this Society, and the percentage of extension was obtained by dividing the corrected extension by the original length.

It was well known before making the tests that the percentage of extension obtained in this manner was affected to a great extent by the length of the specimen, and the investigation, the results of which are recorded in this paper, was undertaken for the purpose of ascertaining, if possible, what difference was due to varying lengths of specimen.† The investigation was, of a necessity, limited to such specimens as could be obtained for the purpose, and hence the results which are given will probably need to be modified more or less, for material of different nature or when tested under different conditions.

NOTE.—The term *ductility* is often applied to denote the percentage of extension, and was so used in the original manuscript of this paper. This term is also applied to a physical property of matter, and the writer agrees with Mr. Henning and others, that it is well to confine the term to its physical application, and to use extension in its stead in engineering discussions.

* Presented at the Detroit meeting (June, 1895) of the American Society of Mechanical Engineers, and forming part of Volume XVI. of the *Transactions*.

† See also *Transactions American Society Mechanical Engineers*, vol. xiii., pp. 289–296.

Digitized by Google

Previous to making the test a series of experiments had been made in the Sibley College laboratories on specimens of various kinds, which indicated that the extension per unit of length at maximum load was constant throughout a test specimen, and hence was independent of the length of specimen. In connection with this investigation, this property was also examined, and from the limited nature of the experiments made it would appear that if the quality of steel were gauged by the percentage of extension at maximum load instead of percentage after rupture the length of the specimen would have little or no material affect on the results.

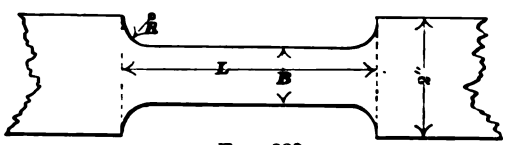

FIG. 239.

The tests which are recorded were made on specimens with flat and round section. Flat specimens, of the form shown in the accompanying diagram (Fig. 239), were cut out of coupons of boiler steel furnished by the Watertown Engine Works. The length between shoulders was made respectively two, four, six, and eight inches.

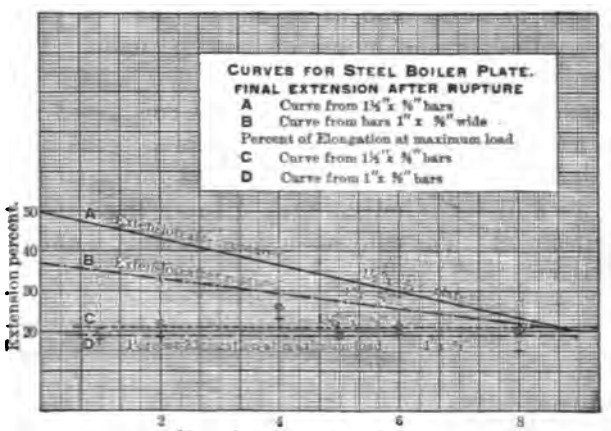

FIG. 240.

The flat specimens were in two series; in one they were an inch, and in the other an inch and a half, in width.

The steel furnished was not in every case from the same sheets, and hence there was some individual difference, due to the nature of the steel.

Digitized by Google

The detailed results of the tests are given in the accompanying table, and are shown graphically in diagram, Fig. 240.

From the diagram the general results of the tests are readily seen. It will be noted that the wider plate shows a greater percentage of extension than the narrower one, and, further, that

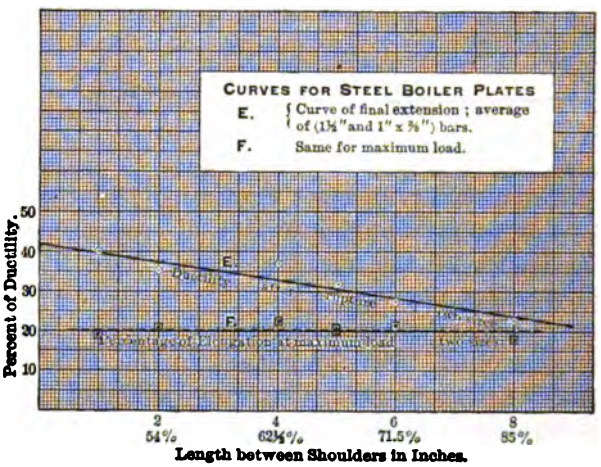

FIG. 241.

the percentage of elongation at maximum load is practically constant, regardless of the length of test specimen. The average results of all tests on flat plates are shown in Fig. 241.

The test made with round specimens was conducted in essentially the same manner; the iron before turning being uniformly of a diameter of $\frac{7}{8}$ inch, which was turned down to $\frac{5}{8}$ inch in the centre, for a distance half an inch greater than the gauged length of specimen. For convenience in turning, a shoulder $\frac{11}{16}$ inch in diameter and half an inch in length was left on each end. The general form of the test specimen being as shown in Fig. 242, the gauged length was respectively two, four, six, and eight inches.

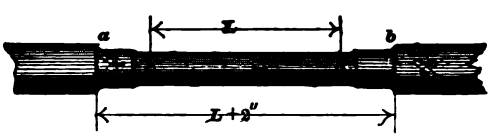

FIG. 242.

The specimens were all tested in tension, in the same way, and on the same testing machine. The testing was done by Mr. C. E. Houghton, M.E., assisted by H. J. Edsall and M. C. Rorty as observers, and to whom I am indebted for assistance in working up the results.

Digitized by Google

In testing, the load was rapidly applied until nearly the maximum was reached; it was then applied slowly until after the maximum had been passed. The position of the maximum load was determined by observation of the scale beam of the machine, which can be done with accuracy. At the instant the maximum load was reached, the extension was measured by sharp-pointed calipers and the results recorded. This method of measurement of extension is open to a slight error, due to inexactness of applying the calipers, and also to reading the

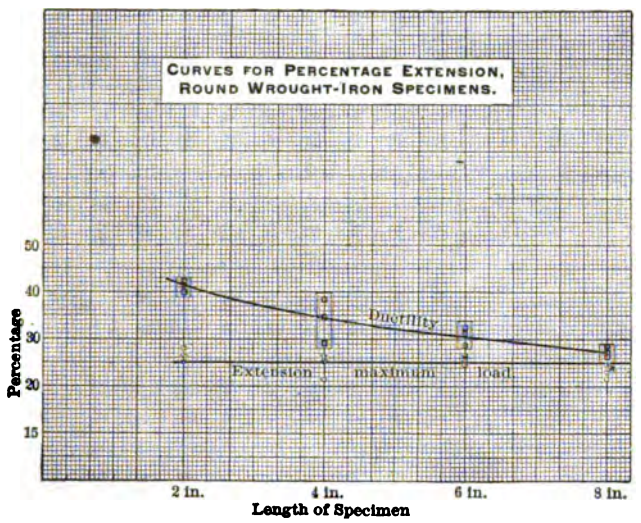

Fig. 243.

results on a detached scale, but in nearly every case the total extension was so much that the maximum error could not make any very great difference in the percentage of extension. It would, however, be quite easy to design an apparatus which would give with great accuracy the extension at the point of maximum load, thus eliminating any possible errors of observation.

The general results of the tests with wrought-iron round specimens are shown in the accompanying diagram, and, making an allowance for difference in individual specimens, would seem to follow the same general law as the flat specimens, in showing a decreasing percentage of extension when measured after rupture, and a practically constant percentage of elongation when measured at the time of maximum load.

Digitized by Google

TENSION TESTS OF BOILER PLATE TO FIND RELATION BETWEEN EXTENSION AND DIMENSIONS OF TEST PIECES.

No. of Test.	Width of Test Piece.	Thickness.	Initial distance between prick punch marks.	Dist. between prick punch marks at Max. Load.	Final Distance between prick punch marks.	Initial Distance between Shoulders.	Dist. between Shoulders at Max. Load.	Final Distance between Shoulders.	Extension at Max. Load.	Final Extension.	Actual Max. Load.	Actual Break. Load.	Reduced Section.	Max. Load per sq. inch.
	inches.	inches.	inches.	inches.	inches.	inches.	inches.	inches.	per cent.	per cent.	pounds.	pounds.	inches.	pounds.
1	1.02	0.36	1	1.18	1.325	1.	1.18	1.365	18.	32.5	22,200	18,000	.85 × .19	61,000
2	1.005	0.375	2	2.38	2.65	1.97	2.40	2.68	19.	32.5	19,650		.69 × .20	52,100
3	1.01	0.39	4	4.98	5.33	4.78	5.76	6.16	23.2	33.7	21,900	16,200	.67 × .22	55,250
4	1.00	0.39	5	6.06	6.36	5.8	6.88	7.19	21.2	27.8	20,600	16,000	.68 × .22	52,750
5	1.01	0.38	6	7.20	7.60	6.8	8.08	8.43	20.	28.2	22,900	20,000	.72 × .23	59,700
6	1.01	0.38	8	9.20	9.42	8.8	10.06	10.25	15.	18.5	26,300	23,000	.76 × .27	68,500
7	1.49	0.39	1	1.20	1.47	.99	1.30	1.59	20.	47	33,700	28,800	1.17 × .21	58,000
8	1.51	0.37	2	2.46	2.75	1.99	2.51	2.84	23.	37.5	30,500	24,500	1.10 × .23	54,500
9	1.51	0.36	4	5.07	5.55	4.77	5.95		26.8	49.5	28,600	23,000	1.09 × .21	52,500
10	1.54	0.38	5	5.98		5.8		7.65	19.6	34.8	34,800	28,000	1.09 × .24	58,600
11	1.55	0.38	6	7.24	7.62	6.8	8.20	8.60	20.7	26.6	30,700	24,900	1.12 × .23	52,200
12	1.53	0.39	8	9.70	10.17	8.8	10.64	11.12	21.2	27.2	31,660	25,200	1.08 × .22	53,400

Digitized by Google

TENSILE STRENGTH AND EXTENSION AFTER RUPTURE, ALSO AT MAXIMUM LOAD FOR WROUGHT-IRON SPECIMENS OF DIFFERENT LENGTHS.

No.	Length.	Diam.	Max. Load.	Break. Load.	Extension.		Averages.
					Max. Load.	Final.	
	inches.	inches.	pounds.	pounds.	p. c.	p. c.	
1	2	.625	52,100	42,100	28	43.5	Tensile Strength, 51,570 pounds.
2	2	.633	51,200	42,400	25.5	41.5	
3	2	.633	51,400	42,300	26	40.5	Extension, 26.5—41.8 p.c.
4	4	.642	51,900	42,300	25.25	34	Tensile Strength, 51,070 pounds.
5	4	.629	50,200	41,800	21.3	29	
6	4	.620	51,100	42,100	26	38.2	Extension, 24.2—33.7 p.c.
7	6	.630	51,700	43,300	26	31.8	Tensile Strength, 50,970 pounds.
8	6	.622	51,000	40,100	25	29.8	
9	6	.621	50,200	41,600	26.2	32.16	Extension, 25.7—31.1 p.c.
10	8	.631	50,200	42,600	23.6	28.4	Tensile Strength, 50,700 pounds.
11	8	.635	51,800	43,300	22.25	24.5	
12	8	.612	50,100	41,100	24.4	27.3	Extension, 23.4—26.7 p.c.

Average diameter of reduced section = 0.43 inch.

The general conclusions from the experiments are: *First*, that a standard size of specimen is necessary in order that the percentage of extension shall have any definite value.

Second, that the ultimate strength of specimens of boiler steel or of homogeneous wrought iron, for specimens between two and eight inches in length, is independent of the length of the test specimen.

Third, that measures of the percentage of elongation taken at the instant of maximum load are more uniform than percentages of extension taken in the usual manner after rupture has occurred.

Fourth, the percentages of elongation at maximum load are in every case less than percentage of extension taken after rupture, for specimens two to eight inches in length, but they are more nearly equal as the specimen is longer.

While the experiments which have been made are not sufficiently extensive to form a basis for a general method of reducing the results obtained with one length to those which

Digitized by Google

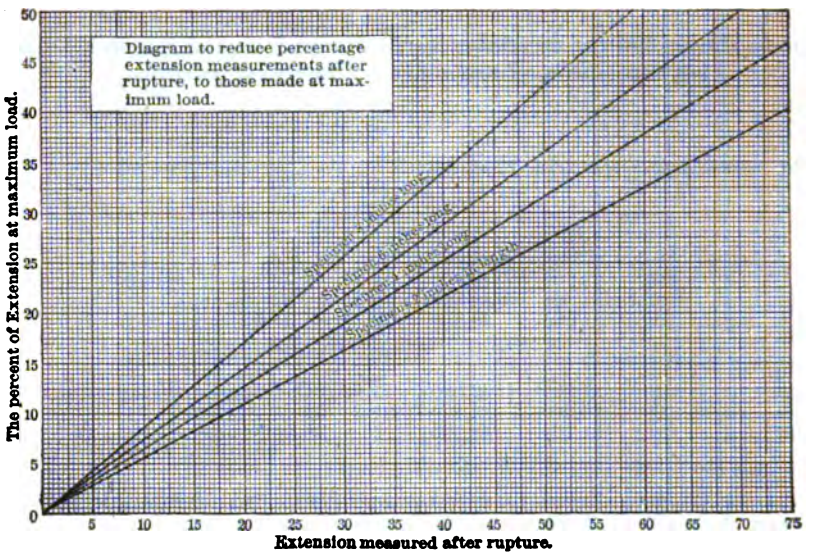

FIG. 244.

would be obtained with another length of specimen, yet, for the conditions which existed for the tests that have been described,

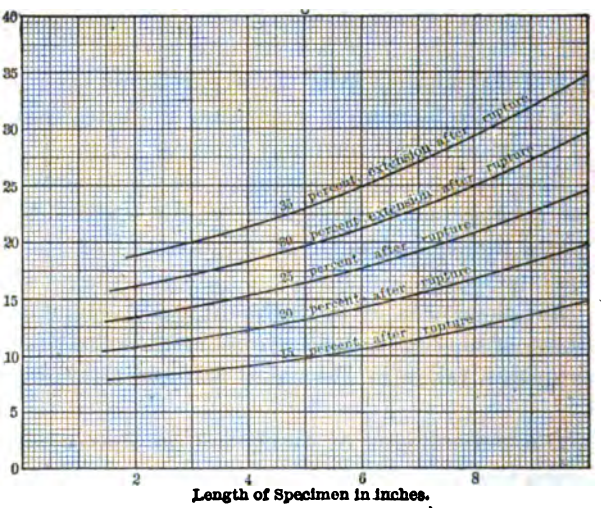

FIG. 245.

the following graphical construction will serve to reduce the results from the case of percentage of elongation measured after rupture, to that of percentage of *extension* at maximum load.

Digitized by Google

Thus, for instance, in Fig. 244 the extension measured after rupture is abscissa; the per cent. of extension at maximum load, the ordinate. As an illustration of the method of using the diagram, suppose that the extension measured after rupture is 30 per cent. in a two-inch specimen; it will be found that this corresponds to 15.3 per cent. elongation at maximum load. This result is obtained by noting the intersection of the line corresponding to the length of specimen with the vertical line from 30, and then reading the corresponding results on the same horizontal line to the left.

Fig. 245 is a diagram used in a similar manner, in which the length of specimen in inches in coördinated with the percentage of extension at maximum load.

DISCUSSION.

Mr. Gustavus C. Henning.—In comment upon the occasional inaccurate use of the word "ductility," referred to by the author in his note, I would call attention to the fact that ductility is a physical quality, and elongation is an effect produced by extraneous forces. No matter what the length of the test-piece may be, the ductility is exactly the same, although the elongation varies in proportion to the shape and length of the piece. This fact of percentage of elongation being the same, and uniform for all lengths of test-pieces at the maximum load the test-piece can carry, is a very valuable one, and has been observed frequently heretofore, especially by Mr. J. H. Wicksteed, of Leeds, who has recommended to adopt the proportionate elongation of the test-piece up to the maximum load, for the reason that no matter what size of test-piece is used, you will always get the same result. I think, if the testing-machine is calibrated, and the material is the same, that the results obtained will be exactly identical for all lengths of test-piece when elongation is measured at the instant of maximum load. Of course, it gives a chance to the operator to run his machine a little bit further than the maximum load, and then measure elongation, because it is not such an easy matter to say at what particular point the maximum load is reached. But a conscientious observer can make no mistake about it. Of course we know that the increased percentage of elongation due to shorter test-pieces is on account of the great amount of elongation which occurs within from 1 to 2 inches of the point of fracture, according to the size of the test-piece. In other words,

Digitized by Google

with a test-piece which is $\frac{3}{4}$ of an inch in diameter, the principal elongation occurs within the inch and a half about the point of fracture; that is, $\frac{3}{4}$ of an inch each side from the point of final parting. Outside that inch and a half the elongation is practically constant, just the same as it was at the instant of rupture. From the instant of maximum load on, no further elongation occurs in the rest of the test-piece, but is entirely localized around the point of fracture in the test-piece, producing stricture and large reduction of cross section. Barba's experiments showed the same thing, although he did not show that measurements of elongation at maximum load gave uniform results for all lengths of test-piece. It is, of course, only one more fact which goes to show what was laid before the Society by the Committee on Standard Methods of Testing, in the report which is here mentioned, and which is a translation of Professor Belelubsky's investigation of the whole subject, where he devises a method and formula by which, with any length of test-piece, you can, by plotting or calculation, determine the elongation of any other length of test-piece of the same material, if it had been used. He shows how you can eliminate from any report that amount of elongation which is due solely to the constriction about the point of fracture.

Digitized by Google

DCXLIX.*

TESTS MADE ON THE EXPERIMENTAL ENGINE OF SIBLEY COLLEGE, CORNELL UNIVERSITY.

SIMPLE, COMPOUND, AND TRIPLE EXPANSION, WITH VARYING RATES OF EXPANSION, AND JACKETED AND UNJACKETED. EFFECT OF SPEED AND STEAM PRESSURE ON CYLINDER CONDENSATION. EFFECT OF VARYING RATIOS OF COMPRESSION.

BY R. C. CARPENTER, ITHACA, N. Y.
(Member of the Society.)

THE tests which will be described in this article were made in every case under the general supervision of the writer and the immediate supervision of Mr. O. G. Heilman,† instructor, and for graduating theses by various post-graduate students.

THE ENGINE.

The engine used in these tests was the Sibley College Experimental Engine, designed by Edwin Reynolds, under the general direction of Dr. Thurston. As a whole, it may be described as a horizontal triple-expansion Corliss engine, coupled to three cranks 120 degrees apart. The cylinders are 9, 16, and 24 inches in diameter, with a common stroke of 36 inches. The shaft is in three sections, connected by flange couplings; each section carries a fly-wheel, brake-wheel, and brake. The steam and exhaust piping are arranged in such a manner that any cylinder can be given steam direct from the mains, and the exhaust from any cylinder can be discharged into either or both of the receivers, and from thence to either of the remaining cylinders or into the atmosphere or condenser. The receivers are placed between the high and intermediate, and the intermediate and low pressure cylinders. All cylinders and both receivers are pro-

* Presented at the Detroit meeting (June, 1895) of the American Society of Mechanical Engineers, and forming part of Volume XVI. of the *Transactions*.

† Mr. O. G. Heilman, M.E., graduate of Sibley College in 1891, junior member of the Society, was mortally wounded by the explosion of a small cannon, July 4, 1894, at Williamsport, Pa. See obituary notice in Volume XVI. of the *Transactions*.

Digitized by Google

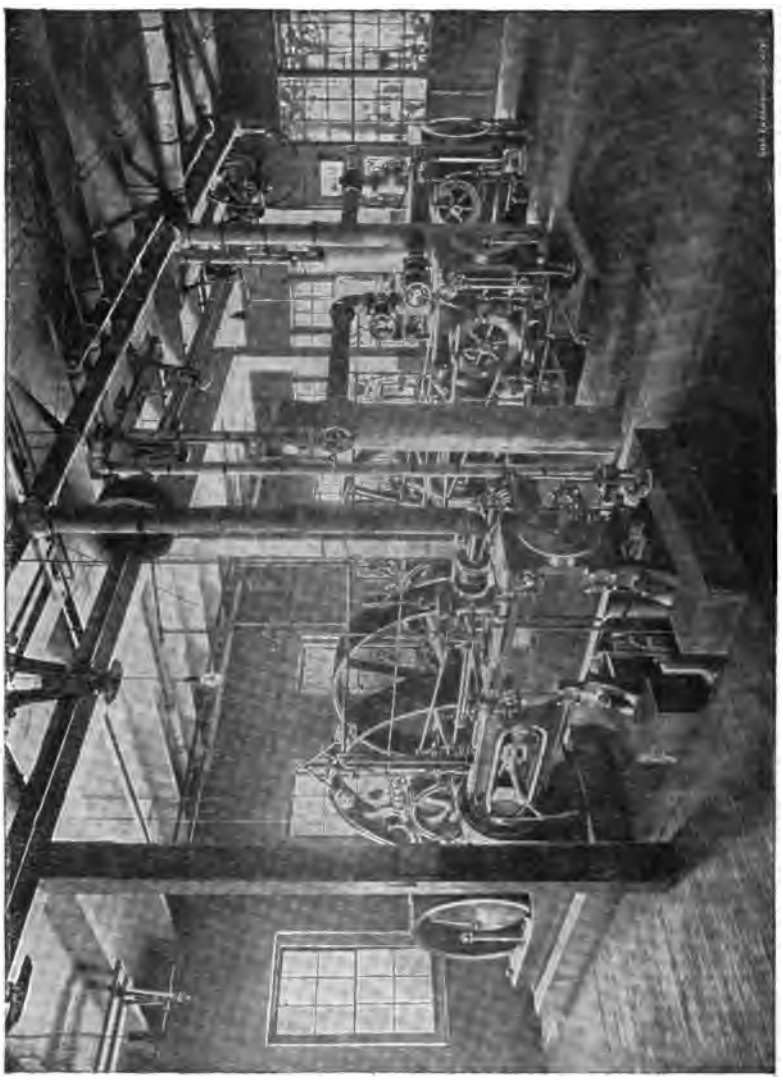

FIG. 246.

Digitized by Google

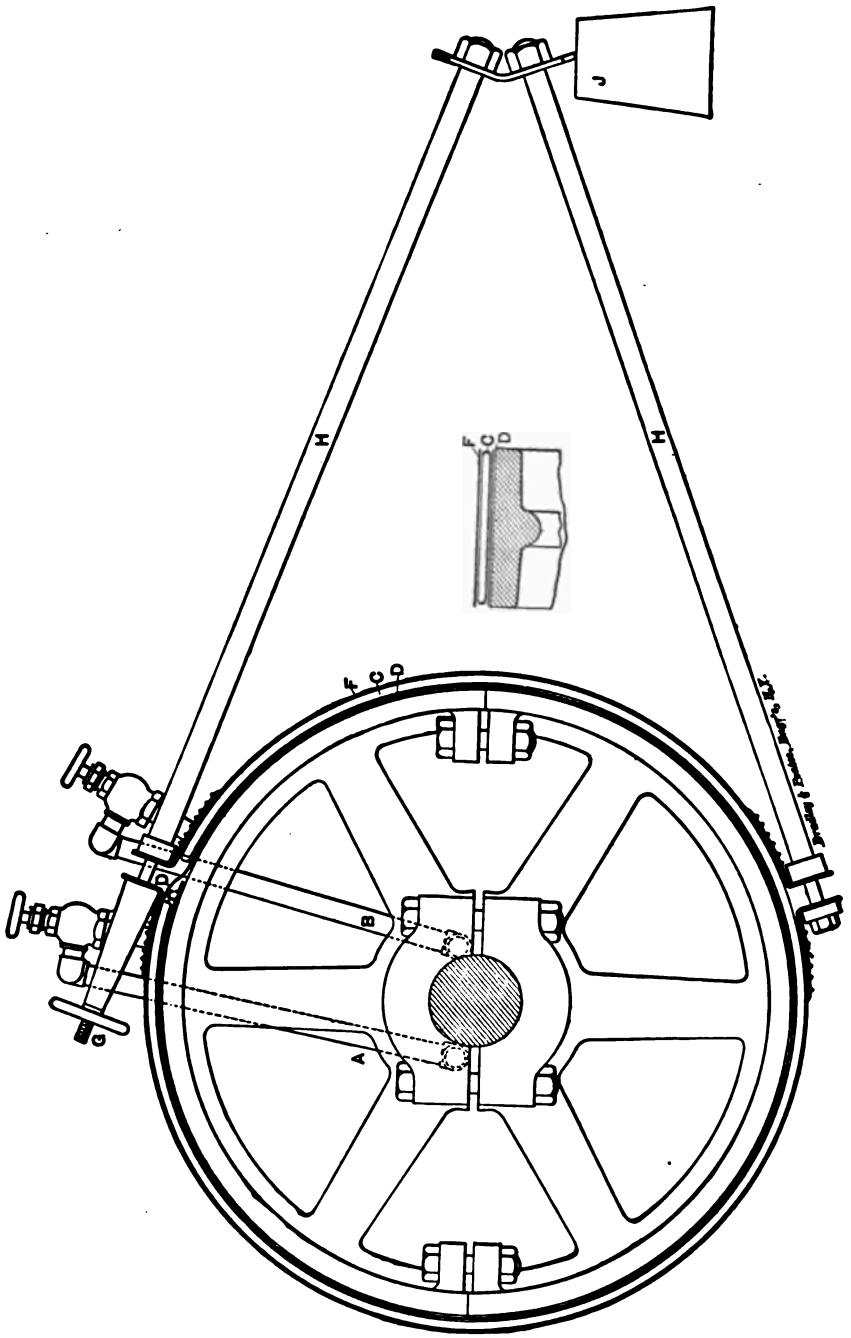

FIG. 247.

Digitized by Google

vided with steam jackets, and the cylinder jackets are piped in such a way that those on either heads or barrels may be used, as preferred, or both at once, thus making possible any use of the jackets. The steam condensed in any jacket may be measured separately. The condenser is a Wheeler surface condenser, and receives its circulating water direct from the University water mains. A Dean air-pump clears the condenser, and discharges directly into weighing tanks, making the steam consumption easily obtainable. The load for the engine is furnished by a type of Prony brake * (see Fig. 247), which, in addition to the usual method of changing the friction of the brake, is provided with an encircling copper tube through which the circulating discharge from the condenser is pumped; by the manipulation of the induction and discharge valves on the tubes the pressure inside, and also the friction of the brake, can be very nicely regulated. The water-tube feature of the brake serves also to keep the brake-wheel comparatively cool.

The following table gives the dimensions of the principal parts of each engine, the clearance being obtained by actual measurement, repeated several times.

GENERAL DIMENSIONS OF ENGINES.

	High Pressure	Intermediate Pressure	Low Pressure
Diameter of cylinder, in inches	9	16	36
Length of stroke, in inches	36	36	36
Clearance, per cent. { Head	7.74	8.97	9.5
Clearance, per cent. { Crank	7.45	8.89	9.2
Clearance, cubic feet. { Head	0.103	0.376	0.895
Clearance, cubic feet. { Crank	0.092	0.367	0.812
Piston displacement, per stroke, cubic feet. { Head	1.3291	4.1887	9.4247
Piston displacement, per stroke, cubic feet. { Crank	1.2379	4.1204	9.3373
Area piston, in square inches. { Head	63.62	201.06	452.39
Area piston, in square inches. { Crank	59.42	197.86	448.19
Fly wheels, diameter, in feet	10	10	10
" " face, in inches	17	17	17
" " weight, in pounds	6934	6938	6935
Brake wheels, diameter, in feet,	4	4	4
" " face, in inches	10	10	10
" " weight, in pounds			
Crank-pin, diameter, in inches	3¼	3¼	3¼
" " length, in inches	3¼		
Connecting-rods, length, in feet	9	9	9

* This brake was fully described in paper No. 559 of the *Transactions of the American Society of Mechanical Engineers*, vol. xv., p. 62.

Digitized by Google

GENERAL DIMENSIONS OF ENGINES.—*Continued.*

	High Pressure	Intermediate Pressure	Low Pressure
Main bearings, diameter, in inches	7	7	7
" " length, in inches	13	13	13
Length of pulley-block bearing, in inches	10½	10½	
Steam-port dimensions, in inches	⅞ × 12	1 × 20	1⅜ × 28
Exhaust-port dimensions, in inches	1½ × 12	1¾ × 20	2½ × 28
Diameter of steam-valve seats, in inches	3½	5	6½
" " exhaust-valve seats, in inches	3½	5	6½
Thickness of steam space in jacket, in inches	½	⅝	⅝
Diameter of piston rod, in inches	2 5/16	2 5/16	2 5/16
" " steam inlet, in inches	3	6	6
" " exhaust outlet, in inches	5	5	8
" " crank-pin, in inches	3½	3½	3½

All the moving parts were weighed before they were put in place. The weights are as follows:

Total weight of fly wheels	20,807	pounds.
" " " brake wheels	5,264	"
" " " crank shaft and eccentrics	9,958	"
Weight of high-pressure piston-rod and cross-head	378½	"
" " intermediate-pressure piston-rod and cross-head	503	"
" " low-pressure piston-rod and cross-head	790	"
" " high-pressure connecting-rod	281	"
" " intermediate-pressure connecting-rod	341	"
" " low-pressure connecting-rod	282	"

Time of vibration of connecting-rods, suspended on knife edges:

	High.		Intermediate		Low.	
	Min.	Sec.	Min.	Sec.	Min.	Sec.
Suspended by crank end	4	44⅓	4	57⅓	4	45
" " head end	4	45	4	41½	4	44⅓

RECEIVER DIMENSIONS.

	First, or High.	Second, or Low.
Length	11 feet 7 inches.	11 feet 7 inches.
Diameter	14 inches.	20 inches.
Number of heating tubes	15	19
Diameter of tubes	1½ inch.	2½ inches.
Receiver volume	8.2 cubic feet.	15.8 cubic feet.
Heating surface	62.34 square feet.	119.8 square feet.

Digitized by Google

The boiler for supplying steam is of the water-tube type, built by the Babcock & Wilcox Company, and is of 250 horse-power capacity. It was installed about seven years ago, and

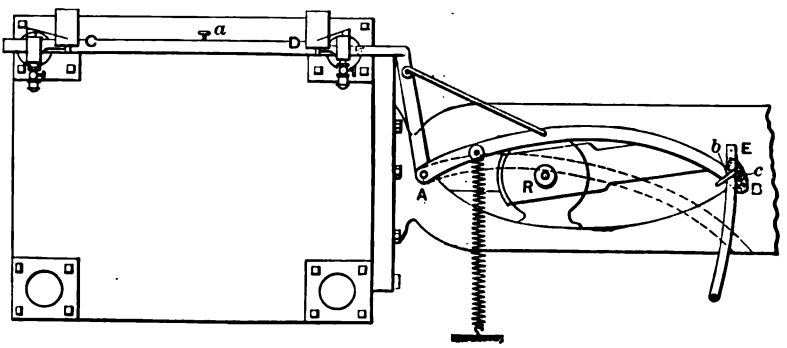

DIAGRAM OF REDUCING MOTION.

FIG. 248.

is designed for a maximum working pressure of 125 pounds, which, at present, is the highest pressure available.

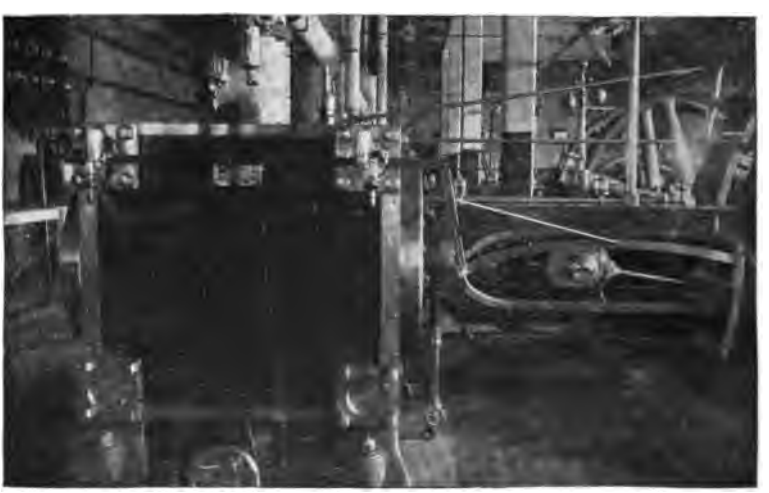

FIG. 249.

The reducing motion for the engine was designed principally by Mr. Heilman. It is shown in the accompanying diagram (Fig. 248) and picture (Fig. 249). It consists of a cam, *AB*, pivoted

Digitized by Google

to the frame, and made in such a form that when in contact with a roller, *R*, projecting from the cross-head, it will give a perfectly correct motion to a bar, *CD*, extending along the cylinder to which the indicators are attached. The motion has proved a very satisfactory one, and will be clearly understood from the sketch. During a test the indicators are left attached to the bar, *CD*, at *a*, and the drum motion is stopped or started by simply putting the lever in or out of contact with the pin in the cross-head. When diagrams are not wanted, the lever, *AB*, is held out of contact with the roller, *R*, by a hook, *EB*, which supports the lever. This is released automatically by turning the cam, *C*, so that the trigger, *b*, engages with the roller, *R*; a device due to Mr. A. H. Eldridge.

The diagrams on all the cylinders and for all the tests were taken simultaneously by aid of an electric magnet, operated by a battery which acts so as to draw the pencil into contact with each indicator drum when diagrams are required. The arrangement adopted was designed by George B. Witherbee (Cornell, 1892) and O. G. Heilman, as the result of considerable experiment. The device, as connected to a Thompson Indicator, is shown in the accompanying figure (Fig. 250).

The jacket water in all the tests was caught in closed tanks, under pressure; these were provided with gauge glasses, and the weight was determined by computation from the volume and temperature while under pressure. The tanks are carefully calibrated and graduated, so that the contents could be read in cubic feet. The water from each jacket runs freely to either of two tanks, which are so arranged that one can be filled while the other is emptying. This system has proved very satisfactory.

METHOD OF TESTING.

In all the tests to be described, the same general method of operation was followed. This, in general, consisted in operating the engine for at least two hours under the load to be carried during the test, and until all the conditions were perfectly uniform, before beginning the test. The actual length of test was in each case rarely less than three hours, and in some cases was eight or nine hours, and often the test was repeated. It was found that about two hours were required, especially when the engine was being operated as a triple-expansion, to secure perfectly uniform conditions, some of the short tests showing phe-

Digitized by Google

nomenally high economy due to the retention of a portion of the steam in receivers and condensers. The system of piping leading to the engine is so arranged that, by opening or closing valves, steam can be supplied to any cylinder at pleasure, and connections are also made, of similar nature, to the condenser. It was found, however, that many of these valves were likely to

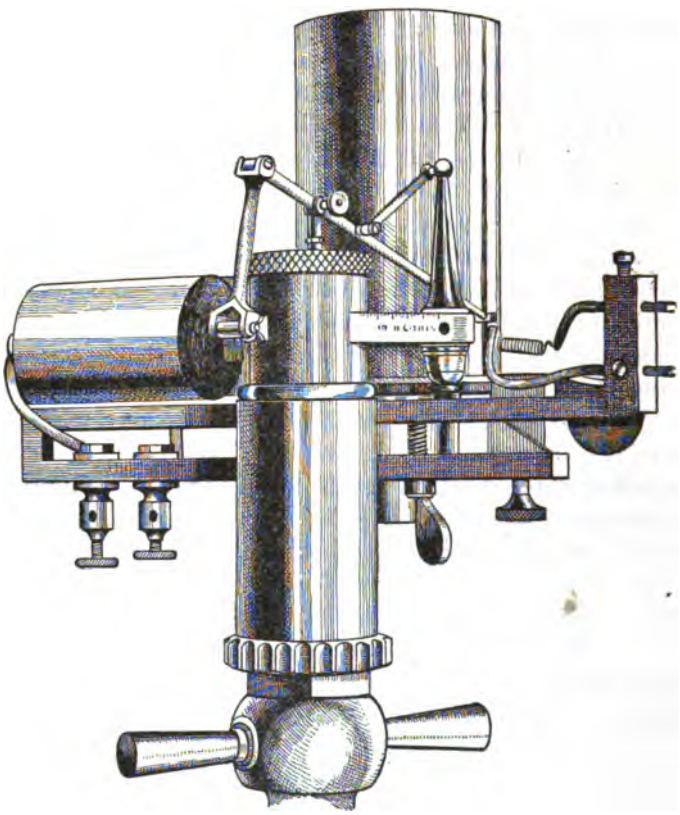

FIG. 250.

leak, and all were somewhat under suspicion, so the rule was adopted of actually disconnecting all unnecessary piping for each test, thus precluding any possibility of error due to leaky valves.

The tests recorded are, first, those made by H. K. Spencer; and, second, those made by L. S. Marks and S. H. Barraclough.

These tests were, in every case, of considerable length, and made with unusual care. In general, we have not found it pos-

Digitized by Google

sible to secure reliable results in tests made by undergraduate students, and consequently none of that kind are recorded in our permanent records.

TESTS MADE BY HENRY K. SPENCER, M.E., CANDIDATE FOR THE DEGREE M.M.E.

The general object of the series of tests made by Mr. Spencer was to obtain the economy of the engine for different ratios of

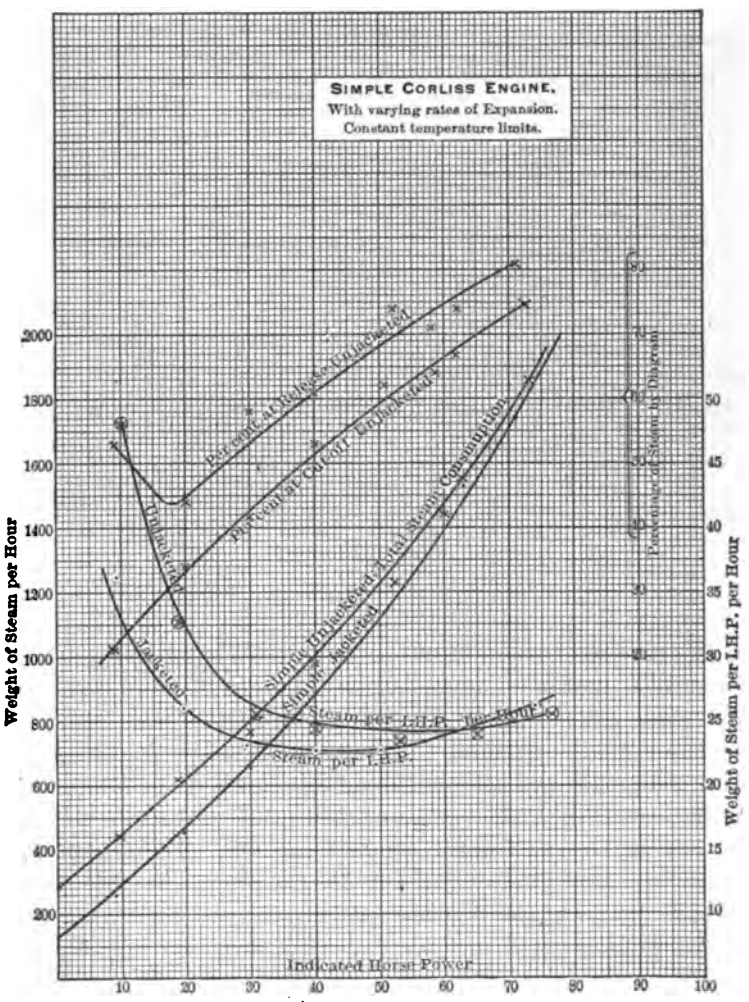

FIG. 251.

Digitized by Google

expansion when working under different conditions, as a simple, compound, or triple-expansion engine. The time at command permitted the finishing of these tests simply for constant and uniform steam pressures. In this series there were made seventeen tests with the simple engine, the same number with the compound engine, and eighteen tests with the triple-expansion engine.

The tests made on the simple engine were with steam pressures as nearly as possible 110 pounds, by gauge at the boiler,

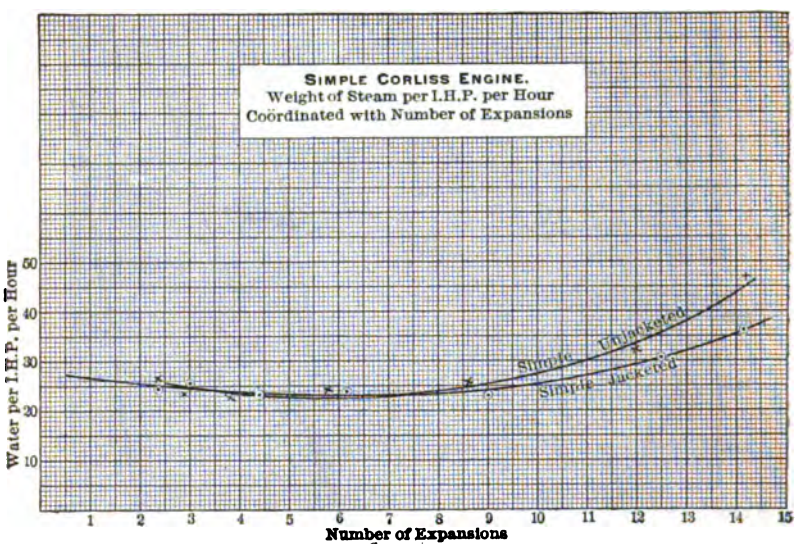

Fig. 252.

and 22½ inches of vacuum in the condenser, it not being possible to secure a better vacuum without the use of more condensing water than could well be spared. The engine was tested simply under two conditions; first, without steam in the jackets, and second, with the jackets filled with steam at boiler pressure. The first series of tests were made with different ratios of expansion, and are denoted in the log as A_1, A_2, etc. The second series of tests are similarly denoted as B_1, B_2, etc. The full particulars and results of the test are given in the accompanying pages. The accompanying diagrams, Figs. 251, 252, and 253, show the general results of the test. For the simple engine there is considerable saving due to the use of the steam-jacket, except under

Digitized by Google

one condition. The diagram showing the total water consumption coördinated with horse-power is interesting, since it shows the form of curve derived by Willans, as characteristic of an automatic engine. This is of interest when compared with the results obtained in operating the same engine with a throttling governor (see tests, Marks and Barraclough), described later in this article, in which case the line of total water consumption on the diagram becomes perfectly straight. The following tables give the average results of the various tests on the simple engine.

The results of the test are all based on the indicated horse-power, and in a number of the tests the brake horse-power is not recorded.

SUMMARY OF RESULTS.

TEST OF SIMPLE CORLISS ENGINE, CONDENSING.

Unjacketed.				Jacketed.			
I. H. P.	No. of Expansions.	Weight of Steam per Hour.	Steam per I. H. P. per Hour.	I. H. P.	No. of Expansions.	Weight of Steam per Hour.	Steam per I. H. P. per Hour.
9.53	14.18	454½	47.54	8.98	14.18	309.6	35.95
19.05	11.97	672½	32.90	19.85	12.45	518.25	26.16
30.34	8.61	783½	25.82	30.26	8.97	719.5	23.77
39.88	5.79	998¾	24.91	40.19	6.26	594.25	23.74
52.41	3.88	122.9	23.45	*46.37	5.04	1064.66	22.96
*59.62	3.47	142.5	23.90	50.24	4.43	1152.50	22.94
62.49	2.97	154.5	24.71	62.39	3.07	1574.25	25.26
73.07	2.28	187.3	25.54	71.88	2.31	1823.75	25.37

* Duration of test, 9 hours.

Digitized by Google

LOG OF TEST. — UNJACKETED.

DATE.	Symbol.	Revolutions per Minute.	Gauge Readings. Pounds. Boiler.	Gauge Readings. Pounds. Steam Pipe.	Gauge Readings. Inches Hg. Condenser.	Gauge Readings. Inches Hg. Barometer.	Temperatures. External Air.	Temperatures. Engine-Room.	Temperatures. Condensed Steam.	Temperatures. Injection Water.	Temperatures. Discharge Water.	Calorimeter. Steam Pipe.	Calorimeter. Moisture, per cent.
March 15....	A_1	83.75	98.7	95.8	23.5	29.234	31.1	79.1	115.5	36	87.1	278.3	0.7
"	A_2	84.48	100.4	96.8	23.9	29.234	33	76.6	110.9	36.5	82.9	278	.72
"	A_3	85.40	101.3	97.1	23.9	29.234	32	81.3	106.3	37	80.4	278.6	.72
"	A_4	86.27	99.7	97.1	24.4	29.234	31	77	96.2	37	75.8	277.4	.75
"	A_5	86.98	100.4	97.3	24.7	29.234	31.6	77	92.5	36	76.2	278.1	.74
"	A_6	87.5	102.7	100.8	24.7	29.234	44	82.1	115.2	36.5	109	276.3	.87
"	A_7	81.97	99.4	97.4	24.7	29.234	44	78.3	88	37	92.1	276.4	.78
January 9...	A_8	86.05	.....	100.6	23.2	29.305	29	83.3	119.3	36	99	273	...

JACKETED.

March 17....	B_1	83.63	99.7	95.7	24.2	29.297	36.6	79.9	115.1	37	84.4	277.3	.74
"	B_2	84.46	100.1	96.7	24.7	29.297	37	82.7	106	37	74.6	278.1	.73
"	B_3	85.38	98.7	97.7	24.8	29.297	37	87	100.2	37.6	75.1	278.1	.75
"	B_4	86.25	101.2	98.9	24.9	29.297	49	90.1	99	38.5	79.3	278.7	.75
" 18...	B_5	86.97	100.3	96.9	24.8	29.278	49	90.1	91.4	39	80.9	278.4	.72
"	B_6	87.68	105.3	102.4	24.8	29.278	70	87.1	79.8	41	78.4	279.8	.75
" 19....	B_7	88.2	101.9	99.3	24.7	29.288	70	86.6	84	42	85.3	279	.75
" 20....	B_8	85.92	102.1	99.3	24.2	.....	42	81.9	115.8	44.4	98.8	276.2	...

UNJACKETED.

SYMBOL.	Weights per Hour. Condensed Steam.	Weights per Hour. Jacket Water.	Cu. ft. Injection Water per Hour.	Head. M. E. P.	Head. I. H. P.	Crank. M. E. P.	Crank. I. H. P.	I. H. P. Total.	Brake. Load.	Brake. D. H. P.	Steam per I. H. P. per Hour.	Mechanical Efficiency.	Horse-power Absorbed in Friction.
A_1.....	1873	0	553	78.57	37.87	77.45	35.20	73.07	682	70.7	25.63	97	2.3
A_2.....	1545½	0	489	65.99	32.22	66.43	30.27	62.49	582	60.2	24.71	96	2.3
A_3.....	1229	0	406	54.21	26.78	55.25	25.63	52.41	482	50.0	23.45	95	2.4
A_4.....	993½	0	377	39.75	19.77	43.27	20.11	39.88	352	37.2	24.91	93.5	2.7
A_5.....	783½	0	300	28.75	14.48	33.74	15.86	30.34	282	27.6	25.82	91	2.7
A_6.....	627½	0	147	16.74	84.5	22.47	10.61	19.05	182	16.5	32.90	87	2.5
A_7.....	454½	0	135	9.46	4.85	11.62	4.08	9.53	72	7.5	47.54	78	2.0
A_8.....	1425.08	0	.....	59.58	29.66	64.81	30.12	59.62	.....	.....	25.90	.....	.....

JACKETED.

B_1.....	1759	64.75	550	75.51	36.56	78.21	35.33	71.86	.....	.....	25.37	.....	.....
B_2.....	1515½	58.50	560	64.46	31.49	67.74	30.90	62.39	.....	.....	25.26	.....	.....
B_3.....	1092	60.50	443	51.61	25.49	53.72	24.77	50.24	.....	.....	22.94	.....	.....
B_4.....	894½	60.0	318	40.63	20.29	42.68	19.89	40.19	.....	.....	23.74	.....	..
B_5.....	655½	63.75	241	30.55	15.37	31.73	14.90	30.26	.....	.....	23.77	.....	.....
B_6.....	452½	65.50	192	19.22	9.74	22.08	10.43	19.85	.....	.....	26.16	.....	.....
B_7.....	259	60.6	99	8.25	4.21	10.02	4.78	8.98	.....	.....	35.95	.....	.....
B_8.....	1002½	62.33	272.33	48.31	24.00	47.84	22.42	46.37	.....	.....	22.96	.....	.....

Digitized by Google

No. of Test.	Cut-off per cent. Stroke.	No. of Expansions.	Release per cent. Stroke.	Absolute Pressure.			Weight of Steam per I. H. P. per Hour by Diagram.		Steam Consumption per Hour per I. H. P.		Heat Units in 1 lb. Wet Steam.	Jacket Water lbs. per Hour.	Wet Steam per Rev.	Jacket Steam per Rev.
				Cut-off.	Terminal.	Back Pressure.	Near Cut-off.	Near Release.	Wet.	Dry.				
A_1 ..	39.6	2.98	98.5	104.1	48.3	6	19.23	20.55	25.77	25.63	1177.9	0	0.373	.....
A_2 ..	28.6	2.97	98.5	101.2	37.7	6	16.82	18.17	24.88	24.71	1177.8	0	.305	.....
A_3 ..	19.5	3.88	98.5	103.1	29.6	6	15.00	17.50	23.61	23.45	1178.0	0	.241	.....
A_4 ..	10.0	5.79	98.5	104.6	21.6	6	13.44	15.40	25.06	24.91	1178.0	0	.132	.....
A_5 ..	4.9	8.61	98.5	101.8	17.5	6	11.14	15.21	26.00	25.82	1178.0	0	.151	.....
A_6 ..	1.4	11.97	98.5	98.0	13.4	6	11.36	14.78	33.13	32.90	1178.8	0	.120	.....
A_7 ..	0.25 (1.08)	14.18	98.5	69.6 (40.6)	10.2	6	10.55 (6.45)	26.2	47.87	47.54	1178.1	0	.092	.....
A_8 ..	23.4	3.47	98.5	105.4	34.0	6.4	15.70	17.0	24.14	23.90	1178.0	0	.28	.....
B_1 ..	39.0	2.31	97.7	105.4	47.7	5.7	19.69	20.95	25.56	25.37	1178.2	64.75	.3504	0.0129
B_2 ..	27.5	3.07	97.7	105.4	36.5	5.7	16.72	18.95	25.45	25.26	1178.3	58.50	.2991	.0115
B_3 ..	16.7	4.43	97.7	104.1	27.5	5.7	14.07	17.38	23.12	22.94	1178.4	60.50	.2132	.0118
B_4 ..	9.6	6.26	97.7	105.9	20.4	5.7	12.41	15.72	23.92	23.74	1178.5	60	.1727	.0115
B_5 ..	4.4	8.97	97.7	105.3	16.8	5.7	11.00	16.12	23.96	23.77	1178.4	63.75	.1255	.0122
B_6 ..	1.05	12.45	97.7	103.5	12.4	5.7	11.18	20.06	23.35	23.16	1179.4	65.50	.08624	.0125
B_7 ..	.....	14.18	97.7	75.4	7.3	5.7	14.69	30.05	36.14	35.95	1178.4	60.6	.04889	.0114
B_8 ..	13.75	5.04	97.7	106.2	24	5.4	13.40	16.71	22.15	22.96	1178.8	62.33	.1942	.0121

No. of Test.	Heat Supplied per Rev. B. T. U.		B. T. U. Supplied above 32° * per I. H. P. Min.	Heat Equivalent of Work.		Heat Discharged per Rev. B. T. U. above 32°.				Heat Loss per Rev. B. T. U.	Percentage Accounted for by Diagram.		Cylinder Condensation Cut-off.	
	Engine.	Jacket.		B. T. U. per Rev.	Per cent. Heat Supplied.	Discharge Water.	Condensed Steam. Above 32°.	Jacket Water. Above 32°.	Total.		Cut-off.	Release.	Per cent.	Weight per Rev.
A_1 ..	438	0	498	37.1	8.47	350	31.0	.....	418.1	19.9	75.0	80.5	25.0	0.094
A_2 ..	356	0	484	31.4	8.82	279	27.0	.....	314.8	41.2	67.7	74.0	32.3	.102
A_3 ..	281	0	458	26.2	9.31	212	18.0	.....	256.2	24.8	63.5	74.0	36.5	.0875
A_4 ..	225	0	488	19.6	8.77	177	12.7	.....	209.3	15.7	53.6	61.6	46.4	.088
A_5 ..	176.2	0	505	14.8	8.42	143	9.12	.....	166.9	9.3	41.4	58.5	58.1	.087
A_6 ..	141.5	0	641	9.22	6.60	109.5	9.95	.....	128.7	12.8	34.5	44.7	65.5	.0782
A_7 ..	108.5	0	868	4.9	4.50	93.6	5.15	.....	102.6	5.9	21.6	53.6	78.4	.0568
A_8 ..	327	0	467	29.8	9.12	.....	24.5	.....	.....	.....	65.0	70.5	35.0	.098
B_1 ..	412.8	14.1	491	36.4	7.41	323	29.1	3.9	392.4	34.5	78.5	82.5	21.5	0.0737
B_2 ..	352.3	13.5	498	31.3	6.33	258	22.1	3.5	314.9	50.4	66.4	75.0	33.6	.1000
B_3 ..	251.2	13.9	447	25.0	5.58	202	14.5	3.6	245.1	20.0	61.3	76.0	38.7	.0825
B_4 ..	208.5	13.6	442	19.7	4.45	155	11.5	3.5	189.7	27.4	52.4	66.4	47.6	.0821
B_5 ..	147.8	14.4	466	14.7	3.26	120.5	7.5	3.7	146.4	15.6	47.0	84.2	53.0	.0665
B_6 ..	101.6	14.7	511	9.6	1.87	85.1	4.1	3.8	102.6	18.7	48.2	89.7	51.7	.0448
B_7 ..	57.6	13.4	693	4.3	0.62	50.5	2.5	3.5	60.8	10.2	41.0	83.0	59.0	.0289
B_8 ..	228.8	14.3	448	22.9	5.11	179.2	16.2	3.7	222	21.0	58.5	72.7	41.5	.0809

* These quantities should no doubt be reckoned from temperature of feed-water, in which case they would be about 100° less, but for convenience they are taken in this test from 32° Fahr.

Digitized by Google

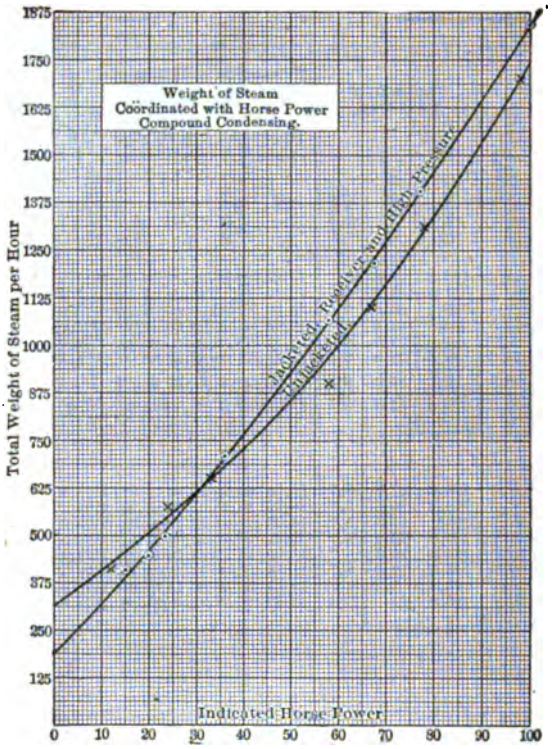

FIG. 253.

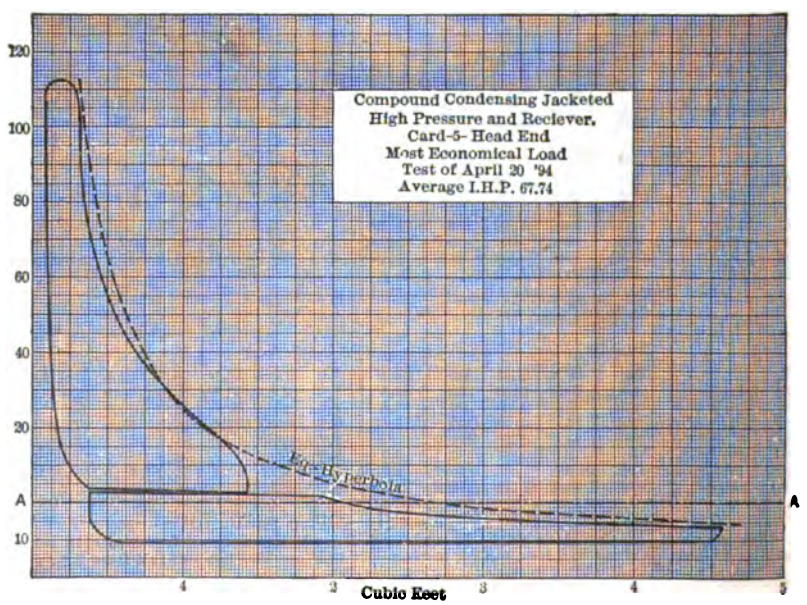

FIG. 254.

Digitized by Google

COMPOUND ENGINE TESTS.

Tests on the compound engine were made in a similar manner, under two sets of conditions: the first being without the use of jackets; the second, with the high-pressure cylinder and first receiver jackets in use.* The first series of tests with jackets empty are denoted by C_1, C_2, etc. The second series of tests, in which the jackets on the high-pressure cylinder and on the first receiver were in use, are denoted by D_1, D_2, etc.† Regarding the general economy of the compound engine it will be noticed that except for very low loads the unjacketed engine gave, in the tests made by Mr. Spencer, rather better results than those with the jacket. In the tests by Mr. Spencer the steam pressure was maintained as nearly as possible at 110 pounds, by gauge, at the boilers, the vacuum at the condenser at 22 inches. In the later tests, series G and H, the steam pressure was about 10 pounds lower, but the general results remain the same. The difference, in any case, in the economy of the compound engine, whether jacketed or unjacketed, is very slight. In this series of tests the engine was not operated with low-pressure jackets in use, but from some preliminary trials it would seem that equally good or better results will be obtained when high-pressure steam is used in that steam jacket (see tests G_1, G_2, etc.). The best results in any tests yet made seem to have been obtained with the use of the jackets, but in no case has this difference amounted to 5 per cent. (see test G_5). Slight changes in steam pressure or in the vacuum seem to make more difference upon results than changes in the condition with respect to jacketing.

---

* It should be remembered that in engines of this class the steam-chest is a somewhat effective form of jacket, and cannot be dispensed with in any method of trial.

† A few tests are included in this report, made with the steam-jackets all in use, under the immediate supervision of Mr. A. H. Eldridge, member of the Society. These latter tests are marked G_1, G_2, etc., and do not cover as wide a range of expansion as those made by Mr. Spencer.

Digitized by Google

SUMMARY OF TESTS.

COMPOUND ENGINE.

Unjacketed.				High Pressure and Receiver Jacketed.			
I. H. P.	No. of Expansions.	Total Steam per Hour.	Steam per I. H. P.	I. H. P.	No. of Expansions.	Total Steam per Hour.	Steam per I. H. P.
11.43	46.40	407	35.61	15.86	46.4	412.5	26.01
24.56	39.62	560.5	22.82	20.51	43.06	447.4	22.36
33.65	26.53	643.5	19.12	28.22	41.44	498.4	21.47
57.78	16.24	949.25	16.41	35.57	32.04	712.3	20.02
66.47	12.23	1098.5	16.52	58.24	17.19	1069 5	18.36
78.72	10.15	1305.5	16.50	67.74	15.45	1221.2	18.03
97.38	7.79	1699.5	17.46	77.44	11.40	1418.1	18.31
				99.75	7.66	1843.1	18.48

TEST OF COMPOUND CONDENSING ENGINE.

Log of Test. Unjacketed.

Date.	Symbol.	Rev.	Gauge Readings.					Temperatures.						Wts.	
		Speed Indicator.	Pounds.			Inches Hg.		External Air.	Engine-Room.	Condensed Steam.	Injection Water.	Discharge Water.	Calorimeter. Steam Pipe.	Condensed Steam in lbs. Jacket Water not Included.	Cubic Feet Injection Water per Hour.
			Boiler.	Steam Pipe.	Receiver.	Condenser.	Barometer.								
April 11–18.	C_1	83.73	109.4	106.4	13.7	21.7	29.321	37	77.5	121.5	36.3	84.7	280.9	1699½	510
" "	C_2	84.57	109.3	106	8	21.53	29.321	36	77	107.7	37	78.7	281	1305½	527
" "	C_3	85.58	106.6	105.3	2.1	22	29.321	37	75.3	100.1	36.5	72.4	281	949½	397
" "	C_4	81.65	110.6	107.6	—91	21.5	29.321	41	74.3	93	41.5	81.2	293	643½	345
" "	C_5	87.35	111.5	108.5	—4	22.5	29.321	44	77.5	89.1	42.8	76.4	294	560½	233
" "	C_6	88.2	117 9	113.7	—4	22	29.33	55	85	81.9	50.9	75.3	294	407	253
Feb. 16.	C_7	85.13	101.7	98.1	5.2	21.5	29.31	99	72.7	118.2	34.3	85.8	268.4	1098½	628

High-Pressure Cylinder and First Receiver Jacketed.

April 13....	D_1	84.4	109.9	106.9	14.5	22.6	29.354	48.6	70.9	116.4	44	83.7	291.4	1639½	619
" "	D_2	85.48	108.9	106.3	8.1	22.7	29.354	49.1	70.9	103.9	44.6	73.8	291.3	1214½	606
" 18....	D_3	86.0	115.4	112.7	2.4	21.5	29.346	68.3	78	102.1	54	83.1	283.9	915½	459
" "	D_4	87.15	114.9	112.1	—1.1	21.8	29.346	69	77.1	88.9	53	75.7	284	575	364
" 19....	D_5	87.72	116	114.3	4.5	23.8	29.325	76.7	89.3	76.9	50.6	63	283.6	368	443
" "	D_6	87.83	115.4	112.4	5.5	23.5	29.325	78.7	86.7	81.4	51.7	79.3	281.7	336	204
" "	D_7	87.97	116.4	113.4	6.75	23.3	29.325	78.3	90.3	82.3	53.3	86	282.6	287	140
" 20....	D_8	85.52	117.5	114.5	4.7	22.7	29.35	75.1	92	107.1	54.4	83.2	282.3	1030½	542

Digitized by Google

UNJACKETED.

Symbol.	High-Press. Cylinder.					Low-Press. Cylinder.					Total I. H. P.	Moisture in Steam, per cent.	Load.	D. H. P. Total.	H. P. Absorb. in Frict.	Mechanical Efficiency.	Steam p. I.H.P. p. h'r.*	No. of Expansions.
	Head.		Crank.			Head.		Crank.										
	M. E. P.	I. H. P.	M. E. P.	I. H. P.	I. H. P. Total.	M. E. P.	I. H. P.	M. E. P.	I. H. P.	I. H. P. Total.								
C_1	58.48	28.32	58.61	26.51	54.74	14.12	21.62	14.01	20.88	42.50	97.33	0.75	886	91.11	6.2	93.7	17.46	7.79
C_2	51.89	25.86	53.17	24.27	49.64	9.55	14.77	9.45	14.31	29.08	78.72	0.75	686	71.81	6.9	91.21	16.58	10.15
C_3	39.79	19.69	40.98	18.95	38.65	6.25	9.78	6.07	9.29	19.08	57.73	0.7	486	51.58	6.2	89.17	16.41	16.24
C_4	19.81	9.76	24.33	11.47	21.41	3.87	6.13	4.05	6.28	12.41	35.65	0.2	280	29.4	6.2	82.5	19.12	26.53
C_5	14.62	7.39	19.87	9.37	16.59	2.52	4.02	2.53	3.95	7.97	24.56	0.0	186	19.10	5.4	78	22.82	39.62
C_6	3.25	1.66	4.16	1.98	3.64	2.47	3.98	2.41	3.81	7.79	11.43	0.0	57	6.22	5.2	54.44	35.61	46.40
C_7	43.05	21.74	40.87	18.69	40.53	8.35	13.01	8.45	12.92	25.93	66.47	1.2	582	6.03	6.2	91.2	16.52	12.22

JACKETED, EXCEPT LOW-PRESSURE CYLINDER.

D_1	56.02	27.24	58.92	26.86	54.30	14.92	23.02	14.91	22.69	45.54	99.75	0.3	900	93.0	6.7	92.9	18.48	7.66
D_2	44.46	21.98	48.07	22.24	44.22	10.77	16.83	10.73	16.38	33.21	77.44	0.3	686	71.0	6.4	92.0	18.18	11.40
D_3	40.42	20.11	37.98	17.60	36.04	6.61	10.56	6.59	10.14	20.53	58.24	0.75	486	51.7	6.5	89.2	18.36	17.19
D_4	23.98	12.09	22.91	10.78	22.88	4.04	6.43	3.87	6.04	12.64	35.57	0.75	280	29.3	6.3	82.5	20.02	32.04
D_5	13.91	7.05	15.04	7.13	14.18	2.85	4.58	2.83	4.46	9.04	25.22	1.3	186	20.2	5.0	80.00	21.46	41.44
D_6	12.34	6.26	13.94	6.62	12.88	2.32	3.73	2.15	3.39	7.13	20.01	0.8	136	14.8	5.2	73.9	22.36	43.06
D_7	9.54	5.20	12.06	5.73	10.93	1.75	2.81	1.56	2.46	5.29	16.22	0.9	87	10.0	6.2	61.7	26.01	46.40
D_8	41.77	20.61	42.52	20.83	41.41	8.61	13.48	8.32	12.74	26.22	67.74	0.9	586	61.02	6.7	90.0	18.03	15.45

* Including Jacket Steam.

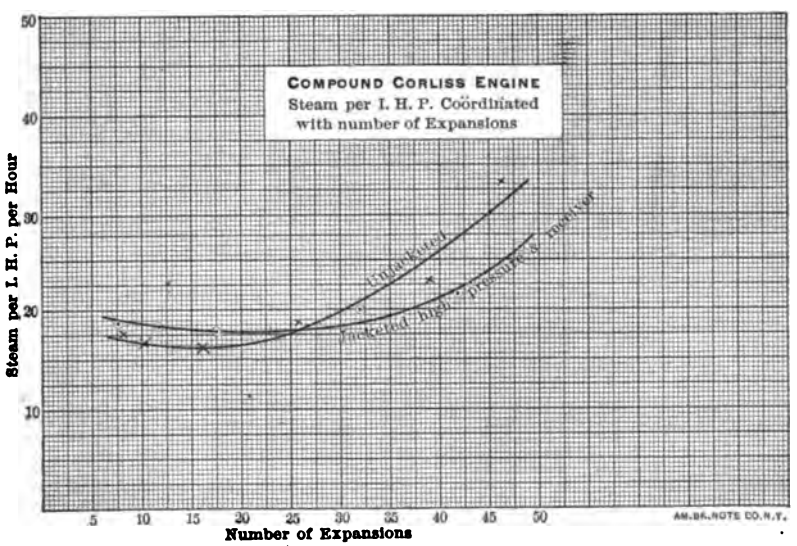

FIG. 255.

Digitized by Google

COMPOUND CONDENSING ENGINE.—WEIGHTS OF JACKET STEAM.

High Pressure and First Receiver Jacketed.

Symbol of Test.	Jacket Steam per Hour. Lbs.			Total Steam per Hour, Including Jacket Steam Lbs.	Jacket Steam, per cent. of Total.		
	High Pressure.	First Receiver.	Total.		High Pressure.	First Receiver.	Total.
D_1	67.57	136.08	203.65	1843.1	3.7	7.4	11.1
D_2	62.28	141.37	203.55	1418.1	4.4	9.9	14.3
D_3	59.32	94.43	153.75	1069.5	5.5	8.8	14.3
D_4	62.71	74.58	137.29	712.3	8.8	10.5	19.3
D_5	70.33	60.03	130.36	498.4	14.1	12.0	26.1
D_6	71.3	60.03	131.33	447.4	15.8	13.4	29.2
D_7	70.82	54.75	125.47	412.5	17.2	13.3	30.5
D_8	61.59	129.38	190.97	1221.2	5.0	10.6	15.6

Cylinders not Jacketed.

Measurements from Diagrams.

Symbol.	Absolute Pressure.			Per cent. of Cut-off, High Pressure.	Steam per I. H. P., from Diagram.		Per cent. of Steam, by Diagram.		No. of Expansions.	Total Weight of Steam per Revolution. Lbs.	Initial Condensation.		B. T. U.* above 32° per I. H. P. per minute.
	Cut-off, High Pressure.	Terminal, Low Pressure.	Back Pressure, Low.		Beginning Expansion.	End Expansion.	Beginning Expansion.	End Expansion.			Weight per Revolution. Lbs.	Percentage of Consumption.	
C_1...	115.2	12	5.5	30.7	13.76	14.0	78.0	80.5	7.79	0.339	0.0745	22.0	343
C_2...	113.7	9.6	5.4	27.1	12.41	12.7	74.7	76.5	10.15	0.257	0.0651	25.3	326
C_3...	112	7.8	5.2	44.1	10.11	14.8	61.5	90.5	16.24	0.185	0.0711	38.5	322
C_4...	112	6.4	5.4	4.8	9.70	16.6	50.5	86.0	26.53	0.131	0.0650	49.5	377
C_5...	109.7	5.3	4.8	1.3	8.79	22.6	38.6	98.0	39.62	0.107	0.0656	61.4	450
C_6...	93.3	5.0	5.0	....	7.43	33.4	30.8	94.0	46.40	.077	0.0535	69.2	703
C_7...	103	9.6	5.1	21.2	11.99	15.2	72.2	91.5	12.23	0.214	0.0592	27.7	325

High Pressure and First Receiver Jacketed.

D_1...	114.2	12.1	4.9	38.4	13.58	14.5	72.7	78.5	7.60	0.364	0.059	16.2	364
D_2...	112.2	9.5	4.8	33.0	12.61	13.1	69.5	72	11.40	0.274	0.044	16.2	356
D_3...	117.3	7.6	4.9	12.9	11.18	14.2	60.9	77.2	17.19	0.138	0.034	24.8	362
D_4...	118.1	5.9	5.2	3.4	9.80	16.6	48.6	83.0	32.04	0.0967	0.032	33.1	394
D_5...	112.4	4.8	4.4	0.9	9.17	23.2	42.6	108	41.44	0.095	0.030	31.3	422
D_6...	107.4	4.6	4.4	05.9	9.92	24.4	43.4	109	43.06	0.088	0.025	27.8	440
D_7...	100.5	4.2	4.2	....	10.82	28.0	41.5	108	46.4	0.0783	0.022	28.0	462
D_8...	120.6	8.3	4.7	15.2	12.84	13.9	68.5	77.1	15.45	0.237	0.042	17.9	354

* This quantity is computed for convenience above 32° Fahr. The feed-water temperature could not be exactly obtained, and it was considered best to make no arbitrary allowance for it.

Digitized by Google

TRIPLE-EXPANSION ENGINE.

Tests on the triple-expansion engine are denoted by E_1, E_2, etc., and by F_1, F_2, etc. In this case tests were made with the engine unjacketed entirely, and also with the steam in all the jackets excepting that of the low-pressure cylinder. A few tests were made with the low-pressure engine jacketed, of which the results of only one test are given here, but for this condition sufficient data has not been obtained to determine whether or not there will be a saving due to its use.

The results of these various tests are shown in the accompanying tables and diagrams.

SUMMARY OF TESTS.

TRIPLE-EXPANSION ENGINE.

Unjacketed.				Symbol.	Jacketed.				Symbol
I. H. P.	No. of Expansions.	Total Steam per Hour.	Steam per I. H. P.		I. H. P.	No. of Expansions.	Total Steam per Hour.	Steam per I. H. P.	
22.74	92.08	625.7	27.52	E_7	26.21	96.74	631.7	24.10	F_7
35.54	62.08	853.7	24.08	E_6	33.98	88.05	714.2	21.05	F_6
46.06	53.38	917.7	19.92	E_5	45.56	69.04	806.5	17.70	F_5
66.10	36.56	1191.5	18.08	E_4	63.32	48.53	1065.4	16.82	F_4
88.57	23.27	1356.7	15.32	E_3	89.79	29.43	1337	14.89	F_3
107.73	17.44	1673.7	15.44	E_2	112.65	21.93	1540.6	13.68	F_2
119.29	17.00	1805.4	15.14	E_8	126.54	19.06	1791.9	14.16	F_8
140.21	13.30	2213.2	15.78	E_1	141.40	15.82	2173.9	15.37	F_1

The best results from the series of tests obtained by Mr. Spencer was 13.68 pounds for the triple-expansion engine, with high pressure and intermediate pressure and both receivers jacketed, with 119 pounds pressure at the boiler and 24.3 inches of vacuum. With a little higher pressure, 125 pounds by gauge, and practically the same vacuum under about the same conditions, the engine has given the steam consumption of 13.3 pounds per I. H. P. per hour. It seems, however, quite probable that this latter number will be sensibly reduced by other combinations of jacketing.

Digitized by Google

TRIPLE-EXPANSION ENGINE.

UNJACKETED.

LOG OF TEST. AVERAGE LOG OF TRIALS.

DATE.	Symbol.	REV.	GAUGE READINGS.						TEMPERATURES.						WTS.	
			Pounds.				Inches Hg.							Calorimeter.		
		Speed per Minute.	Boiler.	Steam Pipe.	First Receiver.	Second Receiv.	Condenser.	Barometer.	External Air.	Engine Room.	Condensed Steam.	Injection Water.	Discharge Water.	Steam Pipe.	Condensed Steam.	Cubic Feet, Injection Water.
Mar. 2	E_1	82.98	121.9	118.9	47.2	1.6	21.7	29.23	40.4	88.1	115.6	54.4	82.4	282.9	2213¼	494
Apr.27	E_2	83.68	117.4	114.6	23.4	—1.6	22.7	29.23	76	87	120.9	53	94.9	287	1673¼	547
"	E_3	84.67	117.9	114.7	15.1	—3.8	22.4	29.332	76	88.9	110.7	54.7	87.3	287.4	1456¼	570
June 1	E_4	85.95	119.7	117.1	12.6	—5.2	22.7	29.387	54	84.1	117.1	53	97.6	285.1	1191¾	435
"	E_5	86.95	120.3	118	2 4	—6.8	22.7	29.287	56.4	84.1	109.9	53	95.3	286.1	917¾	293
"	E_6	86.8	120.4	117.7	¼	—7½	22.6	29.287	67.9	85.3	106.6	53	95.6	286.7	853¾	246
"	E_7	88.2	121	118	—1¼	—8.4	22.7	29.287	56.3	85.1	98.3	53	88.7	286.6	625¾	217
Mar.10	E_8	83.45	122	117.5	36.4	—1.6	23.7	29.256	....	88.1	114.4	38.3	81.1	286.7	1805.41	581

JACKETED, EXCEPT LOW PRESSURE.

Apr.30	F_1	83.77	119.3	116.3	37.7	2¼	24.2	29.318	78	95.6	113.4	54	88.1	287.6	1809¼	835
"	F_2	84.95	119.1	116.1	25.3	—1.7	24.3	29.318	84	98.6	106.1	55	82.4	287.3	1295¼	704
"	F_3	85.45	117.1	114.1	20.1	—2.9	23.3	29.318	85	100	104.9	56.6	83.6	286.4	1010¼	601
May 1.	F_4	86.17	118.4	115.4	10.8	—5.6	24.1	29.324	86	99	97.7	57	78	240.3	767	685
"	F_5	87	117.9	114.7	5.3	—6.3	22.9	29.324	89	103.4	99	59.3	85.3	290.6	554¼	332
"	F_6	87.48	118	115	3.1	—7	22.1	29.324	91	105	100.9	60.9	87	290.9	472	305
"	F_7	87.97	117.1	114.1	8.6	—7½	21.6	29.234	90	104.9	107.6	62.1	104	290	399¼	209
"	F_8	84.41	117.2	114.2	32.5	.89	24.1	29.301	67.2	94.6	106.6	59	84.6	287.8	1438¼	891

UNJACKETED.

Symbol.	HIGH-PRESSURE CYLINDER.					INTERMEDIATE-PRESSURE CYLINDER.					LOW-PRESSURE CYLINDER.					Total I. H. P.
	Head.		Crank.			Head.		Crank.			Head.		Crank.			
	M. E. P.	I. H. P.	M. E. P.	I. H. P.	I. H. P. Total.	M. E. P.	I. H. P.	M. E. P.	I. H. P.	I. H. P. Total.	M. E. P.	I. H. P.	M. E. P.	I. H. P.	I. H. P. Total.	
E_1	46.63	22.37	48.49	21.74	44.12	17.52	26.58	16.74	24.85	51.43	6.52	22.27	6.62	22.39	44.66	140.21
E_2	52.31	25.33	53.64	24.23	49.56	9.29	14.16	9.98	14.93	29.09	4.11	14.22	4.35	14.85	29.07	107.73
E_3	45.53	22.31	50.32	23.02	45.32	7.10	11.01	7.74	11.67	22.68	2.85	9.94	3.08	10.62	20.59	88.57
E_4	38 04	18.93	39.71	18.43	37.35	3.67	5.77	4.94	7.59	13.37	2.26	8.00	2.10	7.37	15.37	66.10
E_5	26.58	13.36	30.20	14.18	27.54	1.97	3.14	2.95	4.59	7.77	1.54	5.51	1.47	5.22	10.73	46.06
E_6	21.05	10.56	25.15	11.79	22.35	1.63	2.59	2.45	3.79	6.39	1.01	3.61	.90	3.19	6.80	35.54
E_7	12.16	6.17	18.16	8.59	14.77	1.19	1.92	1.46	2.28	4.21	.47	1.69	.58	2.08	3.77	22.74
E_8	45.81	22.23	47.98	21.18	43.47	13.04	18.86	13.22	19.88	39.82	5.07	17.43	5.51	18.65	36.10	119.39

JACKETED.

	HIGH PRESSURE AND BOTH RECEIVERS.						LOW-PRESSURE CYLINDER, UNJACKETED.									
F_1	42.86	20.58	41.51	18.78	39.27	15.47	28.69	15.29	23.89	46.57	7.90	27.22	8 32	28.42	55.89	141.40
F_2	40.11	19.71	39.70	18.29	37.98	12.14	18.86	12.11	18.41	37.26	5.19	18.49	5.46	18.90	37.39	112.65
F_3	34.26	16.94	34.22	15.86	32.79	9.48	14.72	9.74	14.76	29.48	3.83	13.47	4.03	13.93	27.51	89.79
F_4	23.66	11.87	26.48	12.33	24.20	6.98	10.92	7.04	10.88	21.80	2.39	8.50	2.42	8.51	17.02	63.99
F_5	18.17	9.14	21.91	10.14	19.11	4.81	7.66	4.91	7.63	15.29	1.58	5.66	1.55	5.47	11.16	45.56
F_6	11.89	6.00	17.68	8.42	14.42	4.11	6.54	3.93	6.13	12.68	.96	3.44	.94	3.37	6.81	33.93
F_7	9.56	4.86	15.63	7.40	12.26	3.19	5.12	3.09	4.84	9.96	.59	2.17	.51	1 81	3.99	26.21
F_8	40.65	19.85	39.77	18.13	37.98	13.87	21.39	14.03	20.12	41.51	6.76	23.46	6.84	23.54	47.00	126.54

Digitized by Google

TRIPLE-EXPANSION ENGINE.

UNJACKETED.

SYMBOL.	Total Brake Load.	I. H. P. Total.	D. H. P. Total.	Horse-power consumed by Friction.	Mechanical Efficiency.	Pounds Steam per I. H. P. per hour.	From Cards. Steam per I. H. P. per hour.	Number of Expansions.	ABSOLUTE PRESSURE. Cut-off, High Pressure.	Terminal, Low Press.	Back Press., Low.	PER CENT. OF STEAM SHOWN BY DIAGRAM. Per cent. of Cut-off, High.	Beginning of Expansion.
E_1	1186	140.21	121.90	18.3	86.87	15.78	13.53	*13.3	125	6	3.6	52.6	86
E_2	886	107.78	91.76	16.0	85.17	15.44	12.61	*17.44	120.6	4.8	3.6	38.3	82
E_3	686	88.57	71.88	16.7	81.16	15.32	11.18	15.32	119.5	4.2	3.6	26.8	78.2
E_4	486	66.10	51.70	14.4	78.21	18.02	9.80	18.02	120.8	3.4	3.1	14.3	54.4
E_5	286	46.06	30.78	15.9	66.82	19.92	9.17	19.92	120.2	2.7	2.9	7.4	46.0
E_6	186	35.54	19.93	15.6	56.22	24.08	8.92	24.08	119.6	2.6	3.2	5.3	37.0
E_7	94	22.74	10.26	12.3	45.12	27.52	8.11	27.52	116.1	2.1	3.1	1.1	29.8
E_8	1000	119.39	103.00	16.3	86.7	15.14	12.34	15.14	124.7	5.0	2.9	39.5	82.0

* Steam in all jackets, except low-pressure cylinder.

JACKETED, EXCEPT LOW-PRESSURE CYLINDER.

F_1	1186	141.40	122.96	18.44	86.96	15.37	10.89	15.37	123.4	5.8	2.8	43	70.8
F_2	916	112.65	94.8	17.8	84.1	13.68	9.26	13.68	121.1	4.4	2.8	28.9	67.2
F_3	686	89.79	72.55	17.5	80.79	14.89	8.11	14.89	121.2	3.8	3.1	19.6	55.2
F_4	436	62.99	45.5	16.5	72.2	16.82	6.29	16.82	121.7	2.8	2.9	8.9	46.4
F_5	286	45.56	30.97	14.6	67.59	17.70	5.81	17.70	121.7	2.5	3.0	4.0	32.8
F_6	186	33.93	19.3	14.7	57.0	21.05	5.98	21.05	123	2.3	3.2	1.5	28.3
F_7	81	26.21	8.82	15.4	33.65	24.10	6.92	24.10	121	2.1	3.6	0.7	28.7
F_8	1036	126.54	108.23	16.3	85.53	14.16	10.05	14.16	120.5	5.1	3.0	34.4	70.8

TRIPLE-EXPANSION ENGINE.

WEIGHTS OF STEAM USED IN JACKETS. LOW-PRESSURE CYLINDER, UNJACKETED.

SYMBOL OF TEST.	JACKET STEAM PER HOUR. LBS. High Pressure.	Intermediate.	First Receiver.	Second Receiver.	Total Jacket Steam.	Total Steam per Hour, including Jackets.	JACKET STEAM PER CENT. OF TOTAL. High.	Intermediate.	First Receiver.	Second Receiver.	Total.
F_1	63.85	133.5	120	46.33	363.7	2173.9	3.0	6.1	5.5	2.1	16.7
F_2	64.7	99.8	123.6	47.3	335.4	1540.6	4.2	6.5	8.0	3.1	21.8
F_3	62.3	89.3	116.8	58.4	326.8	1337	4.6	6.7	8.7	4.4	24.4
F_4	65.7	82.0	90.8	59.9	298.4	1065.4	6.1	7.7	8 5	5.6	27.9
F_5	67.0	76.6	60.1	48.3	252.0	806.5	8.3	9.5	7.4	6.0	31.2
F_6	62.9	69.4	65.4	44.0	241.3	714.2	8.8	9.7	9.1	6.2	33.8
F_7	65.8	73.9	52.3	40.1	232.1	631.7	10.6	11.6	8.3	6.3	36.8
F_8	64.4	117.8	115.7	55.4	353.3	1791.9	3.6	6.6	6.4	3.7	19.7

Digitized by Google

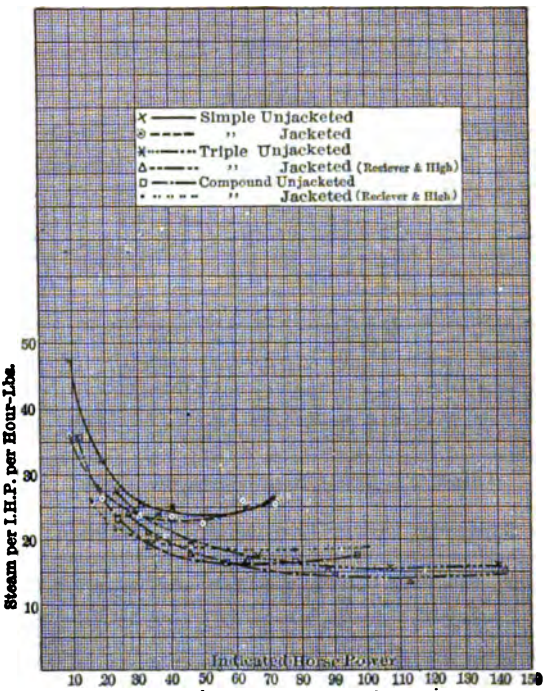

FIG. 256.

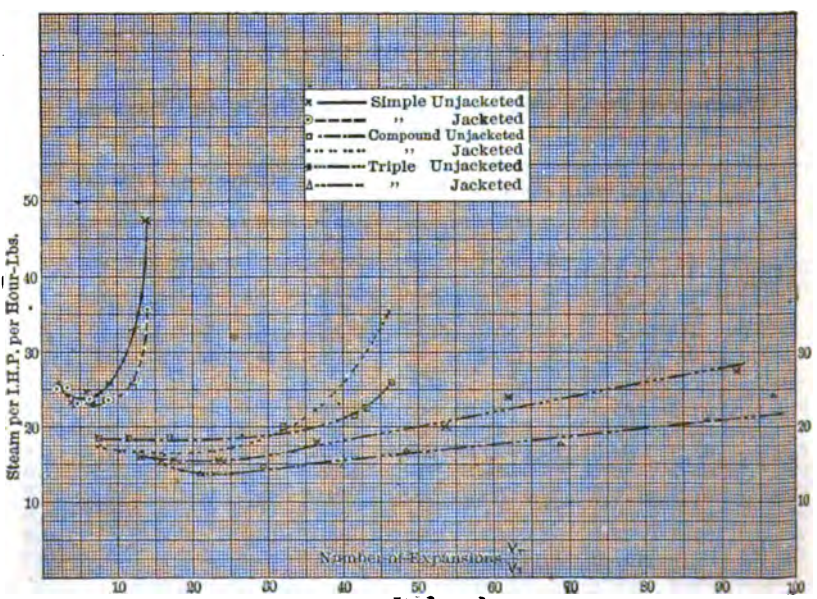

FIG. 257.

Digitized by Google

A series of tests have been made of both the compound and triple-expansion engine, with high-pressure steam in all the jackets.

The results of these tests are not, however, included in this report. No tests have been made with the low-pressure engine jacketed with low-pressure steam, although such a practice has proved of great benefit on many engines.

The following tests were in charge of A. H. Eldridge, M.E., and show the performance of the compound engine with all the jackets in use. The writer regrets that the tests relating to the triple-expansion engine under the same condition cannot be given at this time.

COMPOUND ENGINE.

All Jackets in Use.

Symbol.	Revolutions per Minute.	Temperature, Injection Water cold. Deg. F.	Temperature, Discharge Condensing Water warm. Deg. F.	Temperature, Condensed Steam.	Temperature, Engine-Room.	Temperature, External Air.	Boiler Pressure Gauge. Lbs.	Barometer. Lbs.	Condenser Gauge. Lbs.	Boiling Temperature, Atmospheric Pressure. Deg. F.	Temperature, Jacket Water.	Total Steam per Hour. Lbs. Excluding Jacket Water.	Total Jacket Water per Hour. Lbs.	Per cent. Jacket Water.	Total Condensing Water per Hour. Lbs.
G_1	85	50.32	86.93	115.03	83	53.5	94.5	14.42	11.32	210.96	329	1109.82	238	18.9	30432.1
G_2	85.3	51	80.6	106.4	80	63	95.2	14.501	11.62	211.31	330	1118.17	162.5	14.55	36859.38
G_3	85.1	50.4	87	115.5	82.8	53	94.5	.....	.....	211	330.6	1110	204.62	15.5	30850
G_4	85.4	54	88.5	110.3	91	57.3	95.43	14.41	11.56	211.07	332	1014	162	13.78	28850
G_5	85.7	53	81	106.57	81	54	108.3	14.2	11.16	210.2	330	973.38	214.3	18.0	35040
H_1	.....	.....	.....	.....	.....	.....	.....	.....	.....	.....	.....	.....	.....	.....	34666
K_1	84.8	56	87	115	79	51.1	108	14.1	11.4	210.55	329	1153.2	176.4	13.2	3773952

G. Both cylinders and intermediate receiver jacketed.
K. High and low pressure cylinder jacketed, receiver not jacketed.

Digitized by Google

Symbol.	Per cent. of Steam Accounted for by Diagram at Cut-off.		Per cent. of Steam Accounted for at Release.		Steam Chest Pressure Gauge.		Cut-off, Crank End, Per cent. Stroke.		Cut-off, Head End, Per cent. Stroke.		Release, Crank End, Per cent. Stroke.		Release, Head End, Per cent. Stroke.		Compression, Crank, Per cent. Stroke.		Compression, Head, Per cent. Stroke.		Absolute Pressure at Point of Cut-off. Lbs.		Absolute Pressure at Release. Lbs.		Absolute Back Pressure. Lbs.		I. H. P. Head.	
	H. P.	L. P.	H. P.	L. P.	H.P.	L. P.	H. P.	L. P.	H. P.	L. P.	H. P.	L. P.	H. P.	L. P.	H. P.	L.P.	H. P.	L.P.	H. P.	L. P.	H.P.	L.P.	H.P.	L.P.	H. P.	L. P.
G_1....	94.5	99.3	102.4	100	97.5	15.25	25.9	27.05	25.65	26.9	99	99	98.6	99	10.85	6.21	9.5	5.71	110.4	28.15	33.4	9.65	28.4	4.4	16.2	20.75
G_3....	81.0	74.2	95	88	95.8	.....	23.77	22.41	22.92	23.59	99.4	99.5	99.5	99.8	10.85	6.08	10.57	3.37	102.5	26.47	33	8.63	28.4	3.33	16.7	18.19
G_2....	95	92.5	97.5	102	96.5	15.2	20.4	23	23.4	29	99	100	99	100	13.38	4.31	10.22	4.22	106.5	27.4	33	9.5	27.4	4.5	17.5	20.8
G_4....	75.8	89.2	80.9	101.7	....	.....	21.8	25.4	20.8	25.1	100	100	100	100	11.2	4.1	10.4	4.2	106	27.3	35.5	9	28	4	15.96	20.38
G_5....	66.4	92.7	82.5	99.6	98	13.5	18.18	27.7	16.82	27.9	99.5	100	99.3	100	14.7	4.8	10.7	4.7	97.5	24.15	26.9	8.31	23.9	4.33	13.99	19.06
K_1....	63.1	74	81.8	89.8	....	.....	21	23.5	23.4	26.2	98.4	99.1	97.6	98	12.9	5.45	10.5	5	107	30	34	9	31	4	15.13	24.03

Digitized by Google

Symbol.	I. H. P. Crank.		Total I. H. P.		Jacket Water, lbs. per Hour.		Jacket Water in Receiver.
	H. P.	L. P.	H. P.	L. P.	H. P.	L. P.	H. P.
G_1..	17.2	20.41	35.4	41.15	47.5	91.25	99.25
G_2..	17.09	19.37	33.79	37.56	37.5	75	87.5
G_3..	16.9	21.05	34.4	41.85	35.42	87.2	82
G_4..	15.57	20.28	31.57	40.73	50	51.5	60.5
G_5..	14.01	18.80	28.00	37.88	28.3	92.1	99
H_1..	.....	.....	.....	.....	.....	.....	82.8
K_1..	15.06	22.47	30.19	46.5	.....	78.45	91.95

Symbol.	Weight Condensing Water per lb. Steam.	Total I. H. P.	Total D. H. P.	Mechanical Efficiency.	Moisture in Steam, per cent.	Steam per I. H. P. per Hour, actual lbs., Including Jacket Water.	Steam per I. H. P. per Hour, Corrected for Calorimeter.	Steam per D. H. P. per Hour, Corrected for Calorimeter.	Thermo-dynamic Efficiency.	Heat Supplied per Min. B. T. U.	Heat Discharged per Min. B. T. U.	Heat Utilized per Min. B. T. U.	B. T. U. per I. H. P. per Min., Supplied above 32°.	Ratio of Expansion from Combined Card.
G_1	30.43	76.85	70.82	92.1	0.65	17.93	17.81	19.32	23.65	1,315,157	1,241,779	733,779	337	9
G_2	33.11	71.36	65.74	91.75	0.66	17.17	17.06	18.52	21.64	1,310,412	1,091,035	181,610	322	10.1
G_3	27.3	76.2	70.9	93	0.8	17.25	17.15	18.42	24.2	1,547,951	961,627	193,920	324	10.3
G_4	28.43	72.42	65.6	90.35	0.5	16.25	16.15	17.05	23	1,438,600	1,024,100	414,500	307	12.45
G_5	36	65.88	60.6	92	0.9	18.02	17.86	19.4	22.3	1,396,925	1,118,270	278,655	336	13.6
K_1	32.7	77.38	70.2	91.5	0.75	17.18	17.17	18.93	22.4	1,571,603	1,320,743	250,860	322	11.92

G. All cylinders jacketed.
I. High and low pressure cylinders jacketed, receiver not jacketed.

Digitized by Google

TESTS MADE ON THESIS WORK FOR DEGREE OF M.M.E., BY L. S. MARKS, B.SC. (LONDON), FELLOW OF SIBLEY COLLEGE, CORNELL UNIVERSITY, ASSOCIATE OF MASON COLLEGE, BIRMINGHAM, ENGLAND; AND BY S. HENRY BARRACLOUGH, B.S., UNIVERSITY OF SYDNEY, N. S. W.

The tests conducted by Messrs. Marks and Barraclough were for the purpose of determining the variation in cylinder condensation for different ranges of steam pressure, and for various speeds. For this purpose the governor of the engine was arranged so as to operate at a fixed cut-off, and the number of revolutions was varied by changing the load on the brake. A series of twenty-three tests was made, with different ranges of speed and steam pressures, the results being given very fully in the succeeding tables and diagrams.

TABLE I.

ENGINE TRIALS, BY L. S. MARKS AND S. H. BARRACLOUGH.

Reference Trial Letter.	Intended Absolute Admission Pressure and Speed.	Revolutions per Minute.	Steam Pipe Pressure above Atmosphere.	Condenser Vacuum, Inches of Hg.	Temperature of External Air.	Temperature of Engine-Room.	Temperature of Condensed Steam.	Temperature of Injection Water.	Temperature of Discharge Water.	Weight of Condensed Steam, per Hour.	Quality of Entering Steam, per cent.	Volume of Injection Water, Cubic Feet per Hour.	Gross Brake Load.
		1	2	3	4	5	6	7	8	9	10	11	12
A	¼	86.02	106.4	22.9	22	76	110.4	34	81.7	1730	98.6	567.5	770
B	¼	57.0	106.6	22.4	22	76	108.4	34	84.4	1457½	98.75	455	785
C	¼	55.02	106.6	22.8	24	77	102.6	39	79.4	1242½	99.15	488	800
D	¼	40.52	108.2	23.8	24	77	81.4	37	62.8	961	98.5	584	830
E	¼	26.58	106.8	23.6	24	77	78.7	38.5	58.8	699½	98.6	490.2	840
F	½	84.87	87.1	23.1	24	77	96.9	37.1	72.6	1501½	98.17	684	650
F*	½	83.85	89.1	22.6	26	74	117.3	34	91.3	1583½	98.7	434.5	685
G	½	66.3	89.9	23.5	24	77	98.4	36.5	71.5	1302	98.34	586.5	700
G*	½	69.35	88.7	22.7	26	74	108	34	84.1	1398	98.8	417	685
H	½	54.9	88.9	23.5	24	78	89.2	36.5	64.9	1087½	98.1	609	710
I	½	39.27	89.0	23.9	24	78	79	36.5	57.8	840½	97.9	609	720
J	½	28.58	88.9	23.9	24	78	74.6	36.5	55.9	651½	98.06	530.5	740
K	¾	85.35	66.6	22.3	24	78	115	36.75	95.4	1293	97.85	341.5	535
L	¾	69.7	67.7	25.3	34	82	118.6	36.75	100.1	1120	98.4	275.5	550
M	¾	55.55	65.6	24.3	34	82	110.4	36.5	95	963½	97.95	259	560
M*	¾	56.07	69.6	22.5	26	76	90.0	34	70.2	947½	98.6	417.5	585
N	¾	39.72	69.3	23.9	34	82	95.3	36.5	82.2	750½	97.98	265	600
O	¾	25.7	70.7	24.3	34	82	77.6	36.5	64.5	547½	98.15	333.5	620
P	¾	85.27	47.9	22.9	34	82	105.6	36.5	86.1	1081	97.86	330	430
Q	¾	69.63	48.3	23.1	30	78	91.1	36.25	70.7	898½	98.4	414	440
R	¾	55.62	48.7	23.7	30	78	85.5	36.25	71.7	765	97.8	328.5	450
S	¾	41.98	50.1	22.6	28	74	88.7	34	89.1	682½	98.7	193	485
T	¾	26.64	50.0	23.7	28	76	73.2	34	72.9	467½	98.9	195	495

Digitized by Google

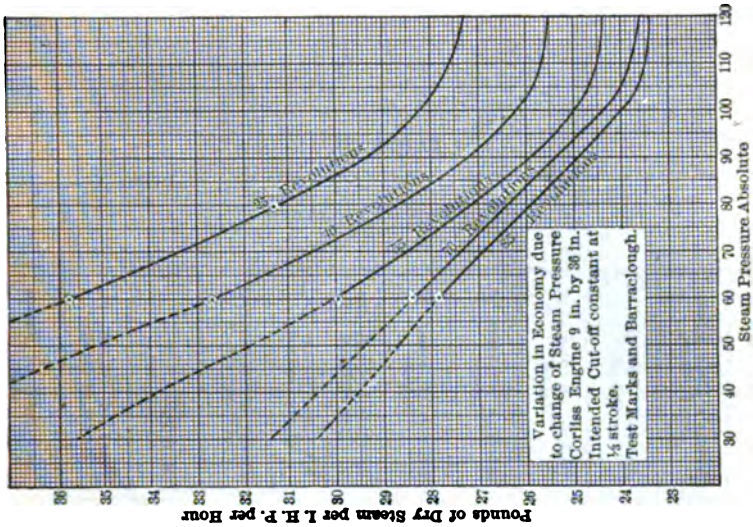

Fig. 258.

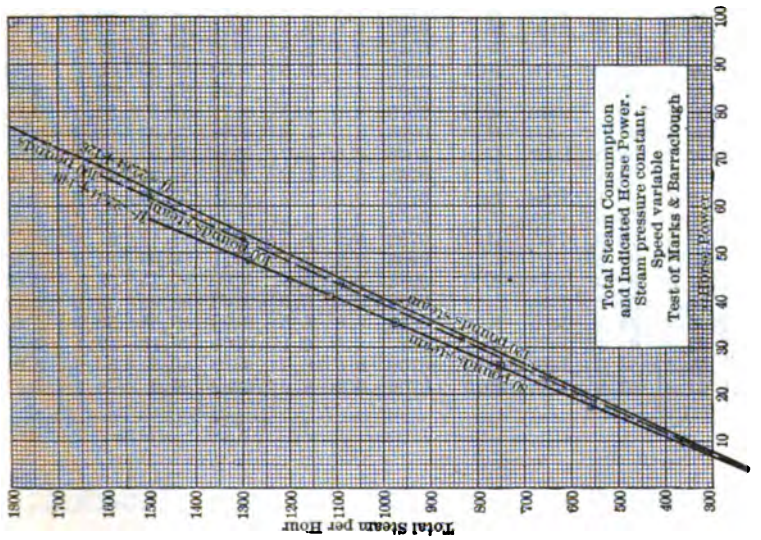

Fig. 259.

Digitized by Google

TABLE II.

Head End of Cylinder.

Reference Trial Letter.	Absolute Mean Admission Pressure.	Absolute Pressure at Cut-off.	Density of Steam at Cut-off.	Absolute Pressure at Release.	Density of Steam at Release.	Absolute Pressure during Exhaust.	Absolute Pressure, End of Compression.	Density of Steam at End of Compression.	M. E. P.	Point of Cut-off, per cent. of Stroke.	Real Ratio of Expansion.
	13	14	15	16	17	18	19	20	21	22	23
A ...	118.0	115.8	.2604	42.0	.1018	3.4	8.5	.0226	77.28	30.9	2.79
B ...	118.8	118.6	.2704	44.6	.1077	3.5	8.2	.0219	81.08	31.6	2.74
C....	119.6	119.5	.2724	44.7	.1079	3.3	8.3	.0223	79.81	31.0	2 78
D ...	120.0	119.8	.2731	48.0	.1054	2.5	7.6	.0202	83.41	32.1	2.71
E ...	119.0	119.0	.2713	49.5	.1188	2.7	6.5	.0176	83.71	32.5	2.68
F....	98.8	94.9	.2192	36.3	.0887	2.8	8.4	0224	64.80	31.3	2.76
F*...	100.5	98.8	.2277	38.8	.0945	3.8	8.5	.0226	68.59	33.4	2.63
G ...	99.8	99.8	.2300	40.4	.0981	3.0	5.5	.0150	69.85	32.1	2.64
G* ..	100.0	99.8	.2298	38.0	.0927	4.4	7.3	.0196	67.22	32.3	2.69
H ...	101.8	100.1	.2305	40.8	.0979	2.9	6.3	.0171	69.57	32.3	2.69
I	102.1	101.9	.2344	41.0	.0995	3.3	5.3	.0145	71.35	32.3	2.69
J	102.2	102.0	.2346	43.0	.1040	2.6	5.7	.0156	72.93	32.2	2.70
K ...	76.7	76.5	.1789	31.0	.0765	3.5	5.3	.0145	51.27	32.6	2.67
L....	78.1	78.1	.1824	32.2	.0792	3.5	5.7	.0156	52.53	32.8	2.66
M ...	76.5	76.5	.1789	35.2	.0862	3.3	4.5	.0125	55.53	37.0	2.41
M* ..	81.9	79.9	.1842	31.7	.0782	3.2	8.5	.0237	54.19	31.4	2.75
N ...	80.2	80.2	.1871	37.1	.0905	2.9	4.1	.0111	58.93	34.8	2.53
O ...	81.9	81.9	.1908	39.3	.0956	2.6	3.9	.0109	60.15	33.4	2.63
P ...	59.2	59.2	.1406	24.8	.0620	3.5	5.9	.0160	38.94	33.4	2.62
Q....	59.9	59.9	.1421	24.6	.0615	2.8	6.5	.0176	40.05	33.0	2.65
R ...	62.2	62.2	.1473	25.1	.0627	2.5	6.1	.0166	40.16	32.1	2.71
S....	63.3	63.3	.1497	28.5	.0706	3.8	8.6	.0229	43.5	33.6	2.61
T ...	62.4	62.4	.1477	30.6	.0756	3.2	8.7	.0232	44.9	34.1	2.58

Digitized by Google

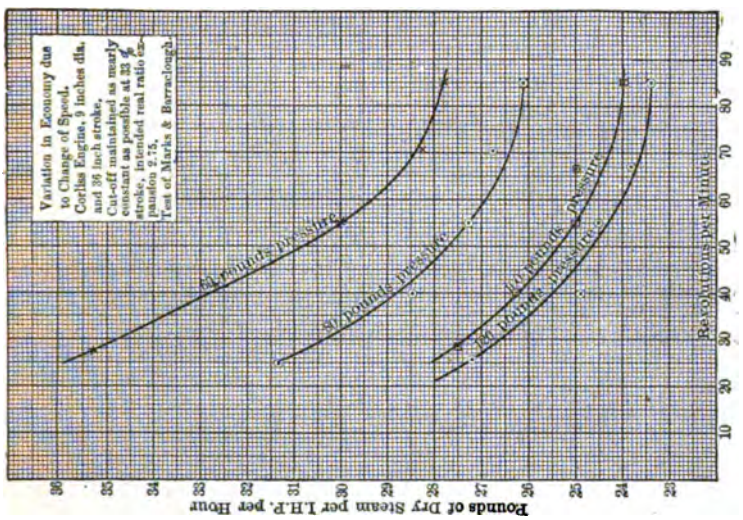

FIG. 260.

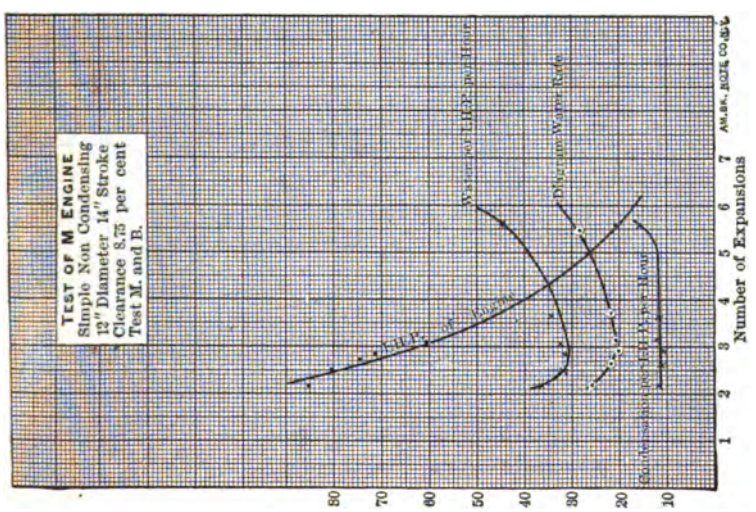

FIG. 261.

Digitized by Google

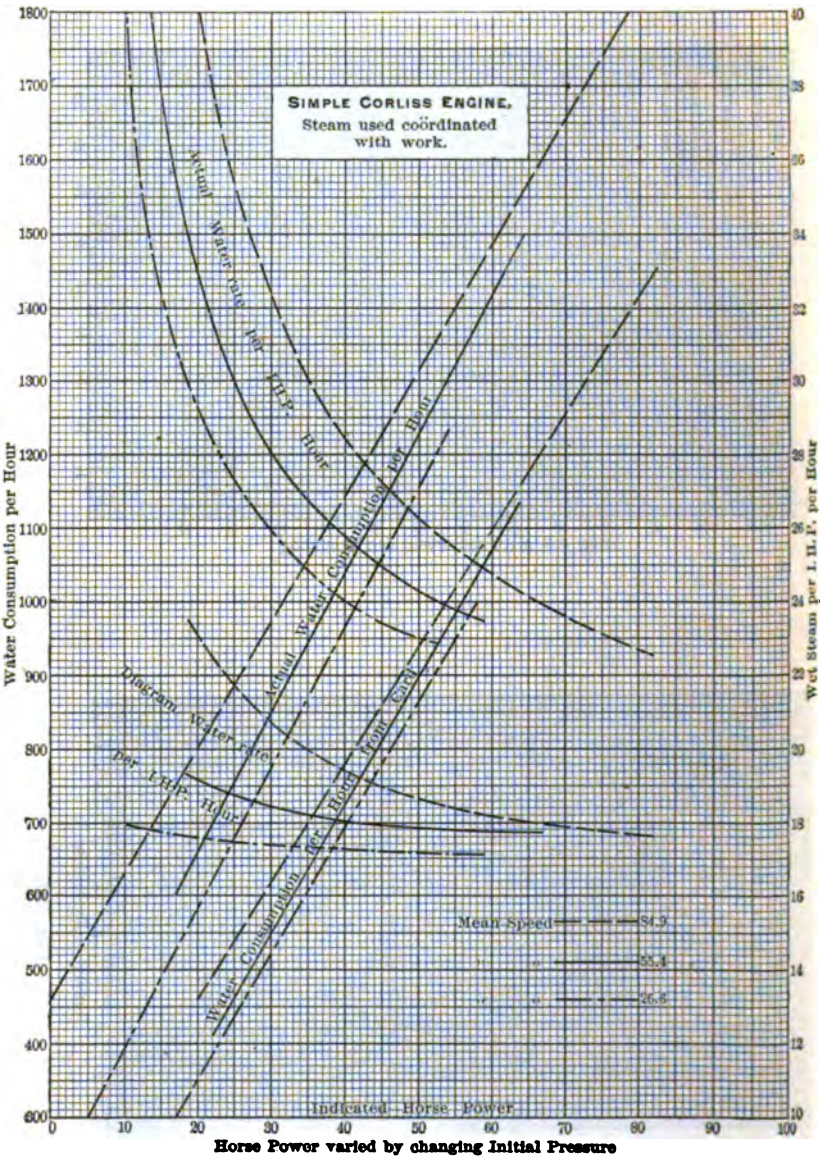

FIG. 262.

Digitized by Google

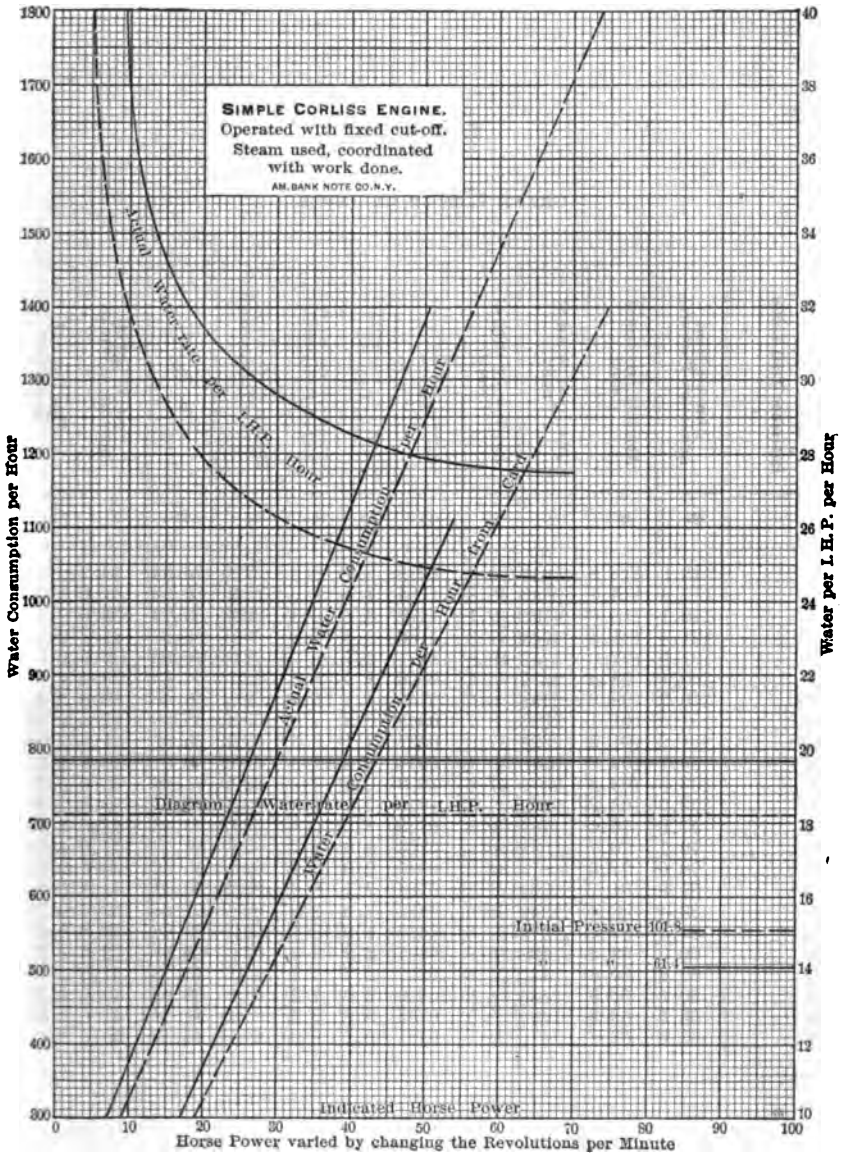

FIG. 263.

Digitized by Google

TABLE III.

Crank End of Cylinder.

Reference Trial Letter.	Absolute Mean Admission Pressure.	Absolute Pressure at Cut-off.	Density of Steam at Cut-off.	Absolute Pressure at Release.	Density of Steam at Release.	Absolute Pressure During Exhaust.	Absolute Pressure at End of Compression.	Density of Steam at End of Compression.	M. E. P.	Point of Cut-off, per cent. of Stroke.	Real Ratio of Expansion.
	24	25	26	27	28	29	30	31	32	33	34
A.....	115.9	114.9	.2625	42.0	.1018	3.7	8.3	.0222	75.64	30.3	2.85
B.....	117.4	115.6	.2640	45.8	.1104	4.4	9.7	.0256	80.18	31.9	2.72
C.....	119.1	118.6	.2703	49.1	.1179	3.6	9.0	.0239	83.78	34.6	2.56
D.....	121.4	121.3	.2763	47.3	.1139	2.3	9.5	.0251	83.83	31.1	2.79
E.....	121.0	121.0	.2753	48.8	.1171	2.7	9.2	.0244	86.83	33.6	2.62
F.....	100.1	98.5	.2270	35.4	.0866	2.9	8.8	.0234	64.33	29.4	2.92
F*.....	100.2	99.8	.2298	38.6	.0940	4.0	9.2	.0244	66.65	32.8	2.67
G.....	101.5	101.1	.2327	38.7	.0943	2.9	7.8	.0209	68.96	33.4	2.70
G*.....	101.2	101.2	.2325	37.8	.0922	4.1	8.5	.0226	65.92	31.1	2.79
H.....	103.1	102.2	.2346	40.1	.0974	2.9	7.5	.0202	69.57	32.1	2.72
I.....	103.5	103.2	.2372	41.3	.1002	2.9	7.5	.0202	71.19	32.0	2.73
J.....	103.2	103.2	.2372	42.5	.1029	2.7	8.2	.0219	72.21	30.8	2.81
K.....	77.8	76.4	.1787	29.9	.0739	3.0	9.3	.0247	50.48	31.6	2.75
L.....	79.1	78.7	.1837	30.9	.0763	3.0	9.3	.0247	53.15	31.6	2.75
M.....	78.0	77.6	.1813	34.0	.0834	2.3	7.9	.0212	55.56	36.5	2.45
M*.....	81.9	81.7	.1904	32.3	.0794	3.7	8.6	.0229	53.51	31.1	2.79
N.....	83.4	83.4	.1941	35.3	.0864	2.3	8.8	.0232	57.34	32.4	2.70
O.....	82.4	82.4	.1919	37.3	.0910	1.9	8.1	.0218	59.08	32.8	2.67
P.....	60.3	59.3	.1408	23.8	.0597	2.9	9.2	.0244	38.98	32.6	2.69
Q.....	60.8	60.8	.1441	23.8	.0597	2.7	7.7	.0207	40.18	31.3	2.78
R.....	60.9	60.9	.1443	24.3	.0600	2.0	7.2	.0194	39.98	30.2	2.85
S.....	63.3	63.3	.1497	28.5	.0706	3.8	8.6	.0229	41.74	32.6	2.69
T.....	62.3	62.3	.1475	29.1	.0721	3.1	9.6	.0254	43.13	32.2	2.72

Digitized by Google

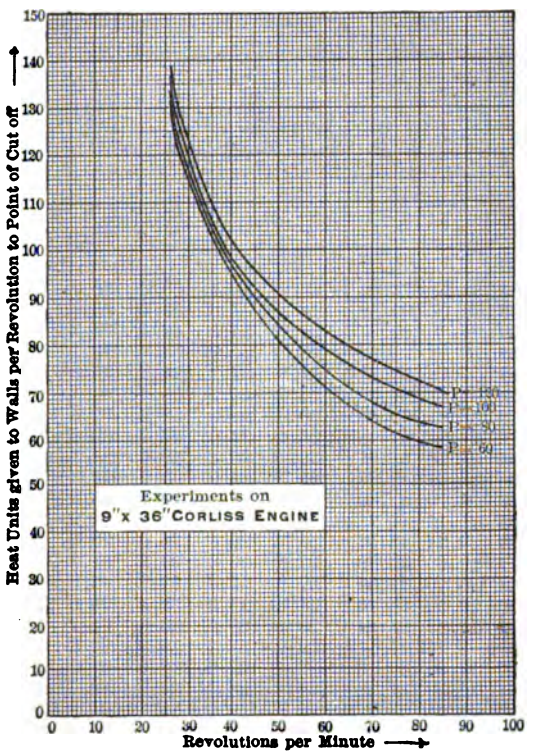

FIG. 264.

Digitized by Google

TABLE IV.

Reference Trial Letter.	I. H. P. Head End.	I. H. P. Crank End.	Total I. H. P.	Wet Steam per I. H. P. per Hour. Lbs.	Dry Steam per I. H. P. per Hour. Lbs.	Brake H. P.	Mechanical Efficiency.	Mean Ratio of Expansion.	Weight Steam per Revolution.	Dry Steam per Revolution. Lbs.
	35	36	37	38	39	40	41	42	43	44
A.....	37.95	34.71	72.66	23.7	23.4	68.2	93.9	2.82	.3375	.3327
B.....	31.36	29.02	60.38	24.1	23.8	55.3	91.6	2.78	.3625	.3573
C.....	25.39	24.88	50.27	24.7	24.5	46.4	92.3	2.67	.3758	.3719
D.....	19.58	18.38	37.96	25.3	24.9	35.2	93.1	2.75	.3945	.3885
E.....	12.87	12.48	25.35	27.6	27.2	23.8	93.9	2.65	.4390	.4328
F.....	29.49	31.81	61.30	24.5	24.0	55.6	90.8	2.84	.2950	.2893
F*.....	30.19	33.25	63.44	25.0	24.6	58.8	92.8	2.65	.3147	.3106
G.....	26.76	24.69	51.45	25.4	25.0	47.7	92.8	2.67	.3274	.3217
G*.....	26.94	24.73	51.67	25.7	25.4	48.6	94.1	2.74	.3192	.3153
H.....	22.08	20.61	42.69	25.5	25.0	40.2	94.3	2.71	.3302	.3239
I.....	16.20	15.10	31.30	26.9	26.3	29.2	93.5	2.71	.3567	.3492
J.....	12.05	11.16	23.21	28.1	27.5	22.0	94.9	2.76	.3800	.3734
K.....	25.29	23.24	48.58	26.7	26.1	44.0	90.7	2.71	.2524	.2474
L.....	21.17	19.62	40.79	27.5	26.8	37.2	91.3	2.71	.2680	.2617
M.....	17.84	16.70	34.54	27.9	27.3	31.7	92.2	2.48	.2891	.2834
M*.....	17.28	16.23	33.46	28 3	27.9	32.4	96.8	2.77	.2821	.2781
N.....	13.55	12.29	25.84	29.1	28.5	23.6	91.7	2.62	.3153	.3093
O.....	8.899	8.213	17.112	32.0	31.4	15.9	93.3	2.65	.3555	.3493
P.....	19.17	17.96	37.13	28.4	27.8	32.9	91.2	2.66	.2114	.2065
Q.....	16.08	15.10	31.18	28.8	28.3	27.6	88.7	2.72	.2153	.2116
R.....	12.91	12.01	24.92	30.7	30.0	22.7	91.3	2.79	.2296	.2245
S.....	10.52	9.47	19.99	33.1	32.7	19.0	95.0	2.65	.2630	.2595
T	6.91	6 21	13.12	35.7	35.3	12.4	94.8	2.65	.2923	.2890

Digitized by Google

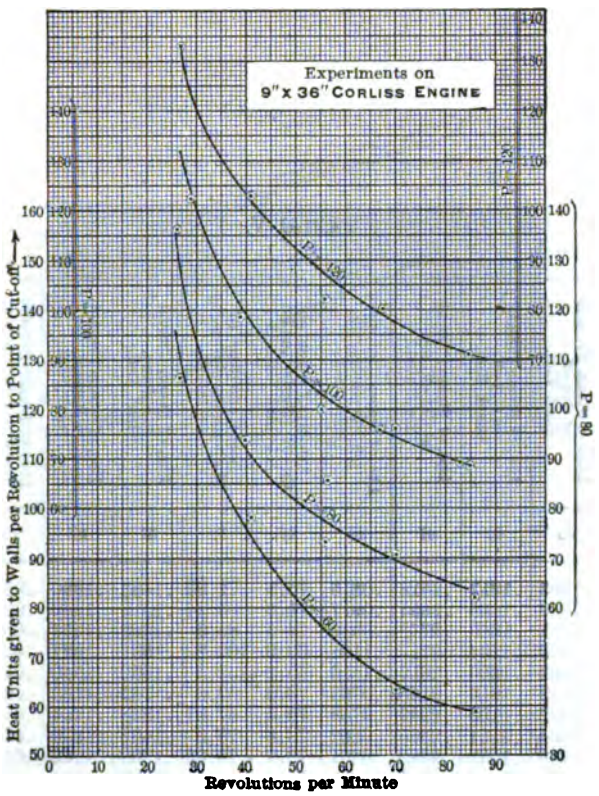

Fig. 265.

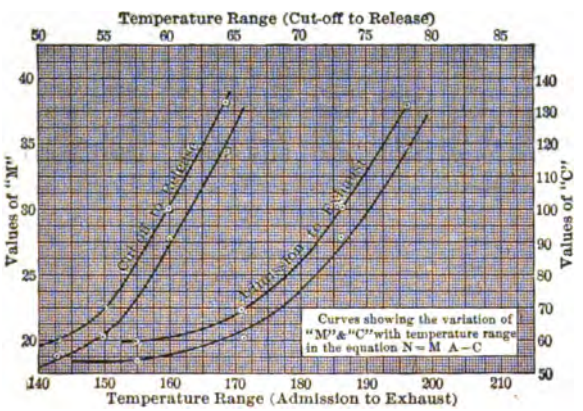

Fig. 266.

Digitized by Google

TABLE V.

Reference Trial Letter.	Lbs. of Steam Present at Cut-off. Head End.	Lbs. of Steam Present at Cut-off. Crank End.	Lbs. of Steam Present at Cut-off, per Revolution.	Lbs. of Steam Condensed per Revolution, up to Cut-off.	Quality of Steam at Cut-off [Neglecting Entrained Water].	Heat Units Given to Walls per Revolution, up to Cut-off.	Lbs. of Steam Present at Release. Head End.	Lbs. of Steam Present at Release. Crank End.	Lbs. of Steam Reévaporated per Revolution during Expansion.	Quality of Steam at Release [Neglecting Entrained Water.]
	45	46	47	48	49	50	51	52	53	54
A	.1295	.1217	.2512	.0815	75.5	71.35	.1483	.1380	.0251	83.0
B.....	.1390	.1265	.2655	.0917	74.3	80.24	.1518	.1440	.0298	82.7
C.....	.1381	.1389	.2770	.0949	74.5	82.9	.1522	.1554	.0306	82.7
D.....	.1423	.1294	.2717	.1168	69.9	102.2	.1631	.1497	.0411	80.4
E.....	.1432	.1380	.2812	.1516	65.0	132.5	.1682	.1540	.0410	74.4
F.....	.1113	.1015	.2128	.0765	73.5	67.6	.1249	.1133	.0254	82.4
F*.....	.1222	.1125	.2347	.0759	75.5	67.07	.1328	.1224	.0205	82.1
G	.1284	.1131	.2365	.0853	73.5	75.3	.1402	.1236	.0273	81.9
G*	.1200	.1092	.2292	.0861	72.7	75.09	.1308	.1202	.0218	79.7
H.....	.1211	.1129	.2340	.0899	72.2	79.4	.1386	.1279	.0325	82.3
I.....	.1282	.1142	.2374	.1118	67.9	98.7	.1411	.1318	.0355	78.2
J.....	.1228	.1104	.2332	.1393	62.5	122.7	.1475	.1353	.0496	76.0
K.....	.0943	.0843	.1786	.0688	72.2	61.6	.1081	.0960	.0255	82.6
L.....	.0966	.0864	.1830	.0787	69.9	70.5	.1118	.0993	.0281	80.6
M.....	.1051	.0967	.2018	.0816	71.1	73.1	.0935	.1091	.0008	69.6
M*.....	.0933	.0890	.1823	.0958	65.5	85.6	.1095	.1031	.0308	76.5
N	.1051	.0957	.1988	.1105	64.3	98.7	.1286	.1130	.0428	78.2
O.....	.1033	.0936	.1969	.1523	56.4	136.0	.1859	.1193	.0593	73.2
P.....	.0754	.0677	.1431	.0634	69.4	57.6	.0871	.0772	.0212	79.8
Q.....	.0751	.0673	.1424	.0692	67.3	62.8	.0863	.0775	.0214	77.8
R.....	.0748	.0654	.1402	.0843	62.4	76.5	.0881	.0791	.0270	74.4
S.....	.0799	.0713	.1512	.1083	58.2	97.9	.0990	.0875	.0358	72.0
T.....	.0798	.0702	.1500	.1390	51.9	125.9	.1058	.0933	.0491	68.9

Digitized by Google

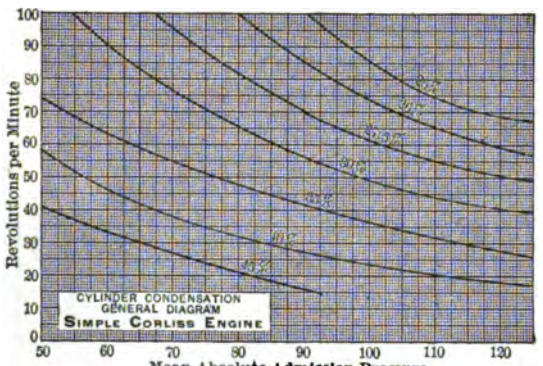

FIG. 267.

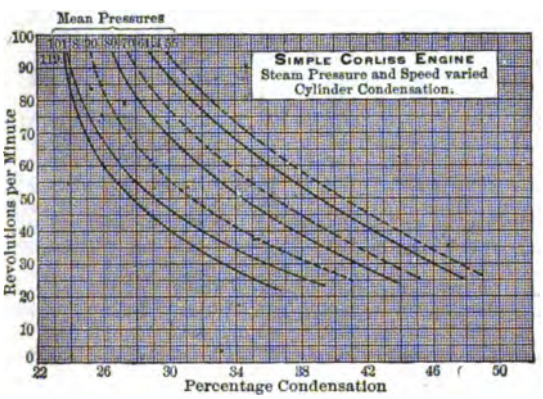

FIG. 268.

Digitized by Google

TABLE VI.

Experiment Trial Letter.	Mean Atmospheric Temperature.	Reading Thermometer.	Reading Thermometer.	Thermometer at Head of	Reading of Thermometer Attached to Exhaust	Reading of Thermometer Attached to Exhaust	Reading of Thermometer Attached to Exhaust	Value of $\frac{1}{1-\frac{1}{R^{\gamma-1}}}$	$R = \frac{V_2}{V_1}$
	36	36	37	38	39	40	41	42	43
A	339.1	229.1	147.4	185.6	191.7	66.0	154.1	.....	639
B	339.9	274.6	133.6	184.6	186.8	65.2	152.8	.....	630
C	340.7	276.9	146.4	186.5	194.3	66.8	154.2	.49	591
D	341.5	277.9	132.4	185.6	189.1	66.6	155.9	.....	667
E	341.6	280.1	137.6	181.1	184.6	66.9	150.9	.....	669
F	337.4	259.2	139.3	186.1	192.6	65.1	141.2	.....	638
F*	337.8	265.1	132 9	187.5	174.9	62.7	149.3	.....	614
G	336.1	280 4	141.6	174.3	187.1	61.7	158.8	.....	614
G*	329.6	283.9	157.9	182.3	170.1	64.1	145.7	.5	633
H	339.4	297.5	149.1	176.2	180.3	61.9	153.2	.....	588
I	339.5	288.8	142.9	174.3	186.7	60.7	155.2	.....	619
J	339.5	271.3	137.0	176.2	182.5	58.2	153.3	.....	655
K	309.4	251.2	144.5	178.7	164.9	58.2	130.7	.....	105
L	310.6	253.1	144.5	179.3	166.1	57.5	131.3	.....	111
M	309.5	258.5	128.5	171.5	171.0	51.0	138.0	.....	100
M*	313.5	254.0	147.2	168.8	166.3	59.5	126.7	.....	117
N	313.3	261.2	135.5	173.5	177.8	53.1	139.8	.64	108
O	313.7	264.6	130.9	170.2	182.8	49.1	143.0	.....	113
P	292.2	228.5	144.0	180.2	153.7	53.7	112.2	.....	104
Q	296.0	238.3	137.0	176 2	156.0	54.7	116.8	.....	113
R	294.1	239.3	130.1	174.5	164.0	54.8	119.6	.68	118
S	296.1	247.4	148.7	186.2	147.5	48.7	109.9	.....	124
T	295.0	260.1	143.4	189.2	151.6	44.9	105.8	.....	117

Digitized by Google

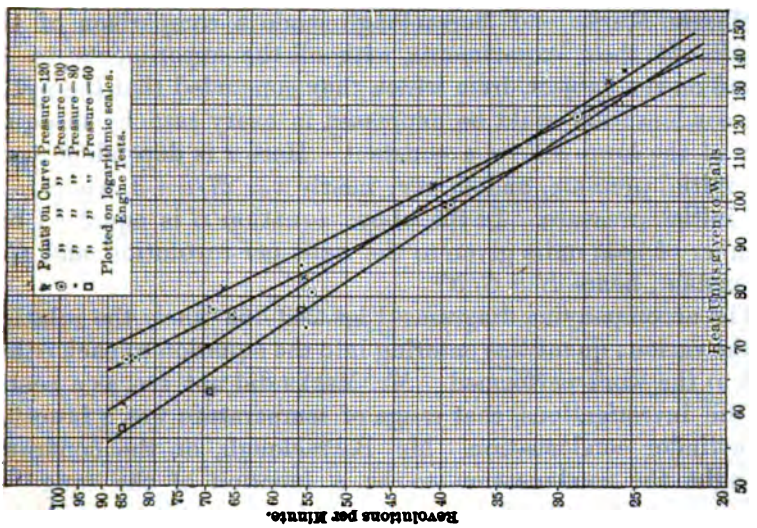

Fig. 269.

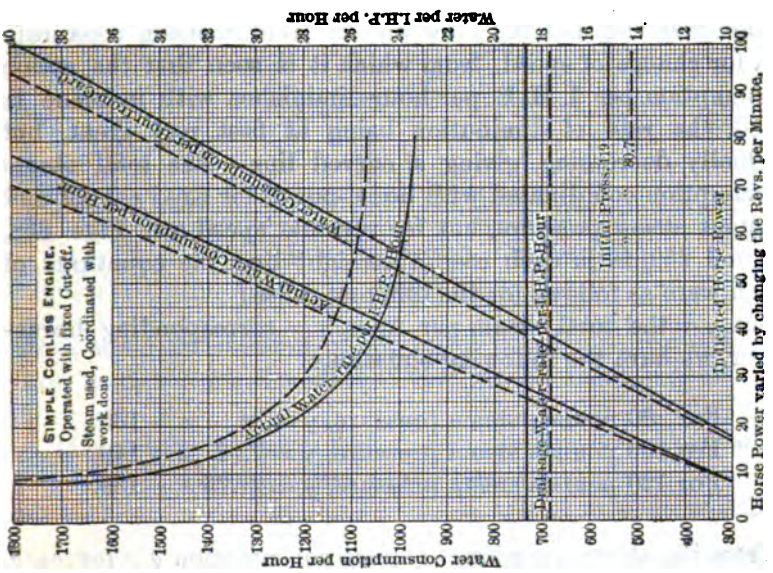

Fig. 270.

Digitized by Google

EXPRESSION FOR CYLINDER CONDENSATION.

Messrs. Marks and Barraclough made a comparison of the results of their experiments, with all the experiments to be found on the subject, from which they concluded that the cylinder condensation could be expressed in every case by an equation of the form $HN^x = a$ constant. Here x is dependent upon the initial pressure, and is very nearly $x = 27/p + 3$, where p is the initial pressure. In the above equation H is equal to the number of heat units given to the walls per revolution, and C is a constant, hence $H = C/N^x$.

The accompanying diagrams (Figs. 263–269) show the relation of the various quantities entering into the equation to each other and to the work performed. Mr. Marks did not see, as a result of the investigations, that range of temperature was a function of cylinder condensation. Mr. Barraclough, on the contrary, thought the condensation to be a function of the range of temperature, and to be represented by an equation in which $A = K(T - t) + b$, in which A is the amount of steam condensed per minute, $T - t$ the temperature range, K and B constants. The results are shown graphically in Fig. 266.

Figs. 260, 262, and 263 show the variation in steam consumption for change of speed, from which it is seen that the steam consumption per I. H. P. per hour diminishes with increase in speed, the rate of diminution being at first very great, but gradually decreasing, giving a curved line. The total steam consumption coördinated with horse-power for fixed cut-off and constant steam pressure, but for variable speed (see Figs. 258, 262, and 269) is in each case a straight line, the equations of which were as follows for the different cases:

Let $y =$ the total steam per hour, $x =$ corresponding horse-power, we have the following equations:

For 80 pounds steam pressure, $y = 24.\ \ x + 130.$
For 100 pounds steam pressure, $y = 22.2\ \ x + 146.$
For 120 pounds steam pressure, $y = 21.75\ x + 135.$

From the above equations of steam consumption y/x for each case can be computed.

The diagram for total water consumption, in the case of varia-

Digitized by Google

tion in initial pressure for constant speed, is also a straight line (see Fig. 261).

Tests are now in process of completion, of the engine when operated under conditions of jacketing different from those given, and for higher and lower steam pressures. The general line of work, however, which is in process of completion this year is,

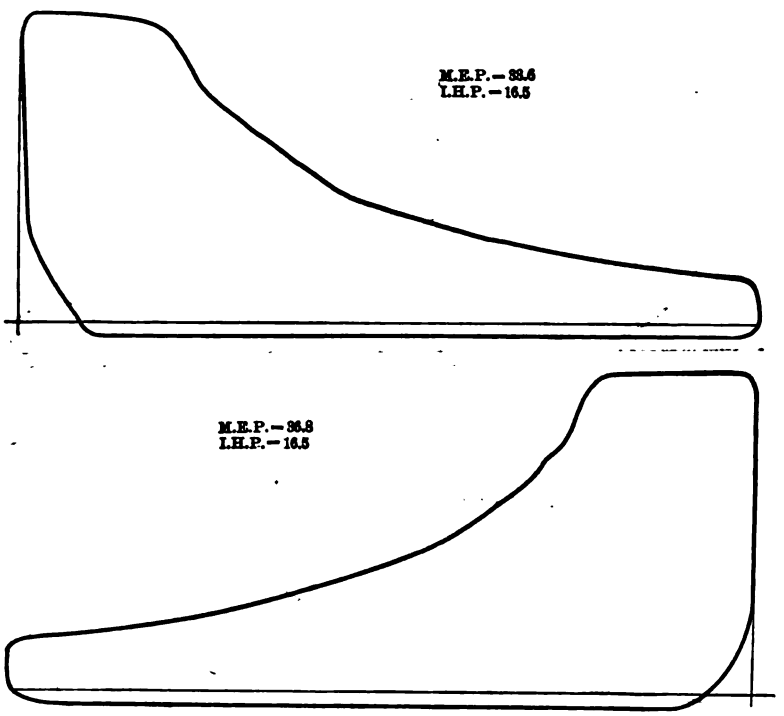

Case I.—Least Compression. (See page 958.)

FIG. 271.

first, the determination of the effect of change in steam pressure; and, second, the effect of very greatly increasing the clearance.

The results of tests made under other conditions will be reported at a later meeting of the Society.

EFFECT OF COMPRESSION.

In addition to those above described, various other investigations have been made from time to time for special purposes.

Digitized by Google

One interesting series of experiments was made to determine the effect of increasing the amount of compression, other conditions remaining unchanged. This series is not exhausted, and many cases remain to be tried; but, as will be seen from the trials made, there seems little doubt but that we are justified in concluding, for this engine at least, that an increase in the

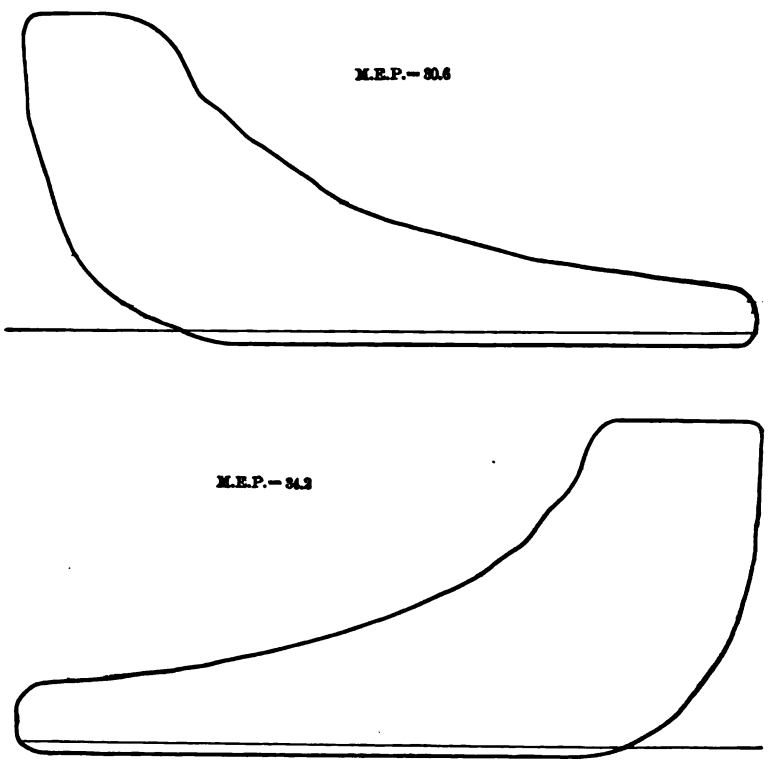

Case II.—Medium Compression. (See page 958.)

FIG. 272.

amount of compression reduces the amount of work of the engine equally as much, or more, than is compensated for by the gain in reduction of cylinder condensation. The first test, in charge of Professor J. H. Barr, has been reported to the Society,* and a brief abstract only is given here. The engine

* "Governing by Compression," by Professor John H. Barr, Volume XVI. of the *Transactions*.

Digitized by Google

was run in its normal condition, with very little compression (Cases A and C), for two different loads, and then the governor was blocked, so that the cut-off occurred at a late point and the regulation was performed by compression, tests being made with constant brake loads. In this case there was no great difference in the results, although the cylinder condensation was

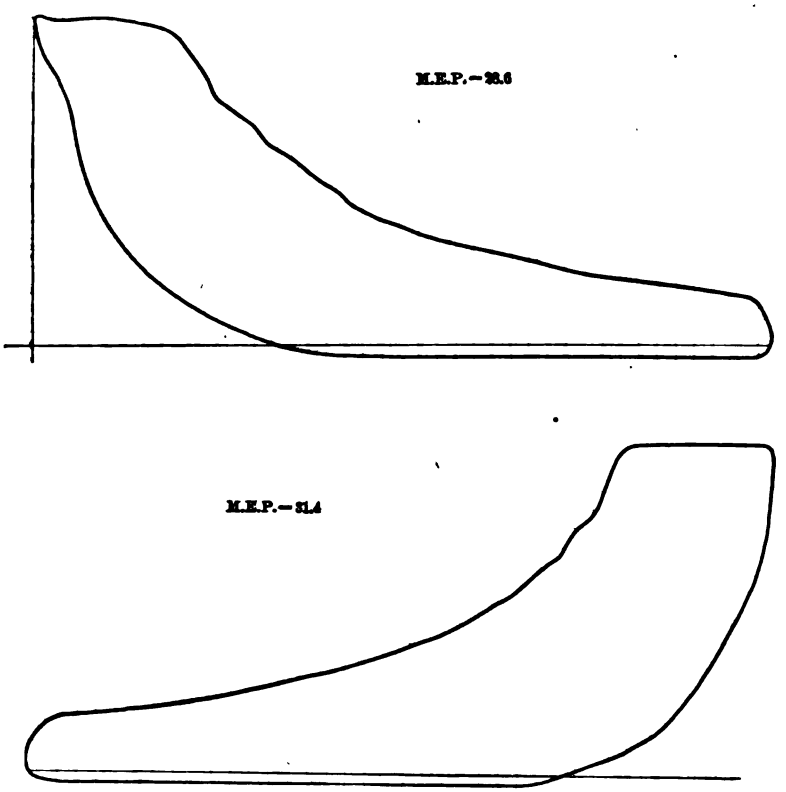

Case III.—Greatest Compression. (See page 958.)

FIG. 278.

materially reduced when the compression was high, as compared with that when the compression was small. This is shown by the position of the saturation curve on the diagram of Figs. 274 and 275.

In the other tests for this purpose the cut-off was maintained as nearly as possible constant, and the engine was operated

Digitized by Google

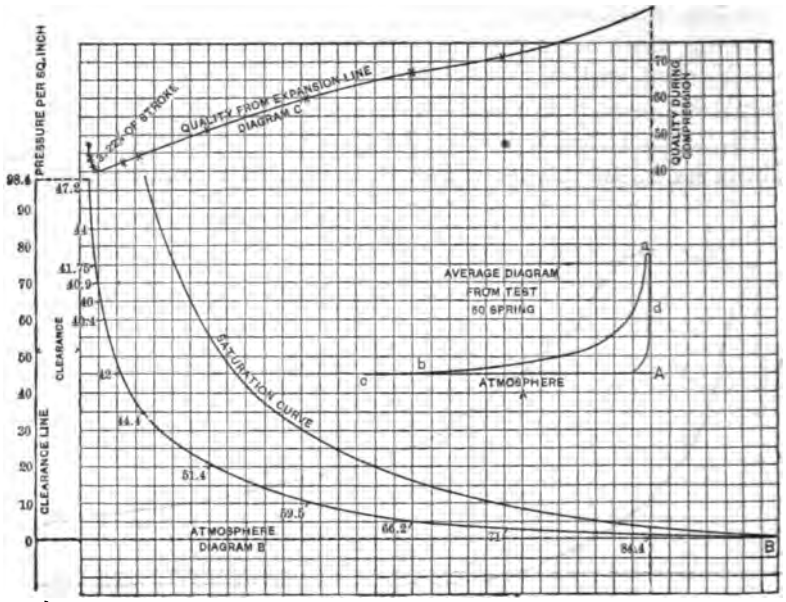

FIG. 274.

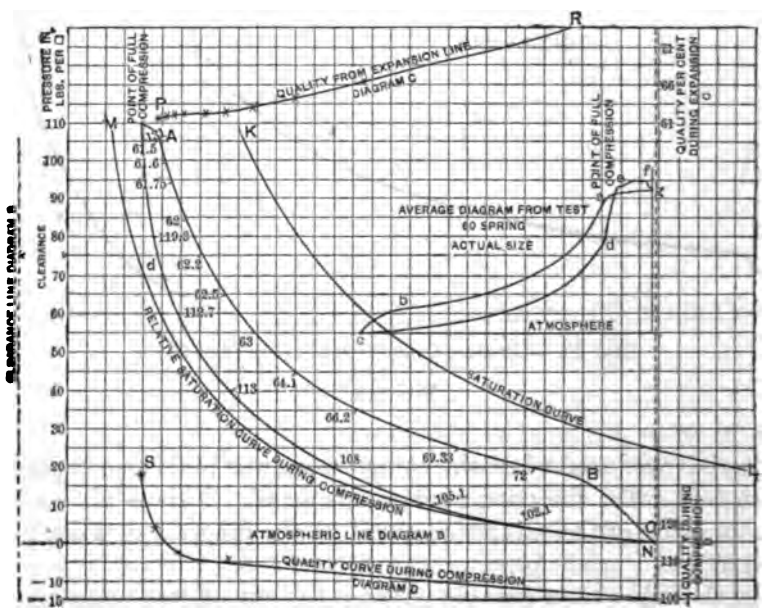

FIG. 275.

Digitized by Google

TEST OF SIMPLE CORLISS ENGINE, WITH VARYING RATIOS OF COMPRESSION, AND WITH NEARLY CONSTANT RATIOS OF EXPANSIONS. CYLINDER, 9 BY 36.

Number of Test	I.	II.	III.
Indicator spring, pounds per inch	40	40	40
Revolutions	85.1	85	84.9
Brake load, pounds	290	275	295
Temperatures.			
Calorimeter	266	266	266.5
Injection water	37.5	37.3	36.3
Discharge water	86.4	88.1	80.1
Condensed steam	83.5	81.3	79
Engine-room	81.2	81	84.5
External air	42.6	44	42
Pressures.			
Boiler gauge, pounds	71.6	70	67.6
Barometer, 29.1 inches, pounds	14.26	14.26	14.26
Condenser, inches Hg., pounds	5.8	6.1	5.2
Condenser, inches, pounds	2.86	3	2.52
Boiling temperature, atmospheric pressure, F°.	210.6	210.7	210.7
Weights.			
Total steam per hour, pounds	1003.8	945.8	896
Total condensing water per hour, pounds	19886	19828	19878
Diagram Dimensions.			
Cut-off, per cent., stroke	21.2	21.6	21.4
Release, per cent., stroke	98.9	98.5	98.9
Compression, per cent., stroke	11.4	25	35.2
Absolute pressure at point cut-off, pounds	80.2	79.5	79.8
Absolute pressure at release, pounds	25.2	25.5	25.3
Absolute pressure, end of compression, pounds.	34.2	53	69.7
Absolute pressure, return stroke	13.3	13.3	13.3
Work.			
I. H. P., head	16.1	14.7	13.84
I. H. P., crank	15.9	15.5	14.17
Total I. H. P.	32.0	31.3	28.01
D. H. P	30.0	29.0	26.0
Mechanical efficiency	93.7	92.7	92.7
Water Consumption.			
Moisture in steam, per cent	0.76	0.8	0.8
Per I. H. P., per hour, actual	31.27	31.6	32
Per I. H. P., per hour, corrected cal	31.03	31.3	31.7
Per D. H. P., per hour, corrected cal.	33.09	33.3	34.0
Per I. H. P., at point cut-off, per diagram	18.8	18.7	19.2
Per I. H. P., at point release	22.6	22.7	24.4
Thermo-dynamical efficiency	14.1	14.1	14.1
Per cent. of steam accounted for at cut-off	60.0	59.3	60.0
Per cent. of steam accounted for at release	72.2	69.0	71.2

Digitized by Google

with a varying amount of compression. This could be regulated by adjustment of the exhaust wrist plates. The above tests were all made with the simple engine, unjacketed, working between constant temperature limits. The summary of results of these tests is given on page 957, and sample diagrams are shown in Figs. 271, 272, and 273.

Tests of [illegible]	A	B	C	D
[illegible] on brake.	220	220	332	332
[illegible]	[illegible]	3	3	3
[illegible] steam, per hour, pounds.	773.6	604	790.93	800.23
[illegible]	3.15	13.98	24.79	25.79
Steam per [illegible] per hour, pounds	43.77	43.20	31.45	35.2
[illegible] per cent. of stroke	1.5	17.5	4.5	26.3
[illegible] pressure above atmosphere	6	108	109	108
Compression pressure, above atmosphere	20	119	19	120

The results of this test have been discussed in a paper on the subject of governing by compression, by Professor John H. Barr, read at the New York meeting, November, 1894.

Figs. 274 and 275, from a previous paper * by the author, give the form of sample diagrams, corresponding to Tests A and Tests B.

DISCUSSION.

Mr. William Kent.—I hope Professor Carpenter will not be satisfied with a boiler with only 120 pounds pressure. I hope he will use 170 pounds pressure. It is not of so much importance to know what a triple-expansion engine will do at 120 pounds pressure when the commercial pressures are 160 pounds. Again, I would like the author to explain, if he can, why the very best test made of all the series of this engine gives an economy so much lower than has been achieved by triple-expansion engines elsewhere.

Professor Carpenter.—Our engine is a small engine with large clearances. We cannot get the same economy which is obtained with large engines, yet I believe few engines have done better when working between the same temperature limits. If clearance could be had without increasing extra surface for condensation, it would have no effect on the economy, as indicated by our recent tests. It is, no doubt, of considerable importance.

* "The Saturation Curve as a Reference Line for Indicator Diagrams," vol. xv., *Transactions*.

Digitized by Google

Mr. Kent.—Another point is that the maximum speed of this engine is less than 100 revolutions. Corliss engines have been made to run much faster than that. Let us have this engine run with as high speed as the Corliss engine can give.

Mr. George I. Rockwood.—I should think the poor vacuum realized in the condenser explains the low economy of this engine more rationally than the large clearances and its small size. It will be a matter of gratification if Professor Carpenter will concentrate, in some one place in the paper, his purposes in making the tests and his views resulting from them. I hope that he will carry out tests at an early date to find out just the value of the intermediate cylinder in reducing coal consumption, especially with variable loads, and that he will place the results on record for inspection.

Mr. Storm Bull.—I have been very much interested in this paper, and for two or three years I have been conducting a series of experiments in the very line of Professor Carpenter's. I have an engine of a different character. It is a compound engine only, and with poppet valves, but which has the advantage in this case of running at varying speed. It can run from 75 to 150 revolutions. But the general results of Professor Carpenter have been confirmed in a general way. I think, however, we have obtained more favorable results for the jacket than Professor Carpenter has obtained. But my investigations especially have been to determine the influence of change of speed and of cut-off. My experiments have shown that the larger the load is and the later the cut-off is, the smaller the influence of the jacket will be, and the higher the speed, the smaller the influence. I think the results which I obtained are more favorable to the jacketing than Professor Carpenter's. We have also a large clearance, and we have found, also, that the clearance is an important element. I would like to present these matters to a later meeting, so I will not say much about them at the present time.

Professor Carpenter.—In regard to Mr. Kent's remarks, I have not felt, nor do I feel, that it is safe to draw any general conclusions from our tests. There are many conditions yet to be examined, and it seems to me the paper had better stand in its present form. I took great pains to give objects and conclusions in advance of the data of each test. All conclusions, so far as we can give them at present, are to be found in this form in this paper. We hope to get in later times more complete data and

Digitized by Google

fuller results, and I hope we may at that time be able to give those conclusions which seem so desirable.

I think what Mr. Rockwood said is no doubt true, that the poor vacuum is largely the source of poor economy. I hope that we may be able to make complete tests, in the manner suggested, with the intermediate cylinder left out. I might say that we have already made a few tests in that way. But unfortunately, Mr. Heilman, the instructor in charge, was killed in an accident, and the results of these tests could never afterwards be found. The results, I believe, showed somewhat in favor of Mr. Rockwood's method; but just how much I am not able to state at the present time. We are putting in a boiler to carry 450 pounds of steam pressure, and we have already been making tests on one at 500 and 700 pounds, so that I think that we will perhaps in a short time find out the effect of high-pressure steam.

In this connection I may refer to correspondence which has been in progress concerning the electric device used in the tests of this engine, to operate a number of indicators simultaneously. A well-known firm engaged in the manufacture of standard steam appliances in the city of Boston has written to say that the device of Messrs. Witherbee and Heilman is very similar to the invention of Mr. Frederick Sargeant, who obtained letters-patent of the United States for an electric device by which any number of diagrams could be taken from as many different cylinders simultaneously. This patent is No. 450731, dated April 21, 1891. Since then Mr. Frederick Lane has improved on this invention, and received letters-patent of the United States, numbered 530433, December 4, 1894, covering the same improvement.

In 1892 this same company was called on to furnish apparatus for the simultaneous operation of several indicators by electrical means, and after making inquiry in various directions they were unable to find any one who had a knowledge of such a device. Before getting out the patent in 1891 they made an extended search over the period of ten years prior to that date, and finding nothing in any way relating to such electrical device, they proceeded with confidence to negotiate for the purchase of the Sargeant patent above referred to.

Our view in the laboratory has always considered devices of this class in the nature of scientific apparatus, and so we had never taken occasion to look up the record or chronology of the matter until this correspondence was brought to our attention. It may

Digitized by Google

not, therefore, be without interest that I quote the following letter from one of our best-known experts in the testing of multiple-cylinder engines:

June 28, 1895.

Prof. R. C. CARPENTER.

Dear Sir:—I received a note the other day from Mr. J. T. Henthorn, saying that he had had some correspondence with you regarding the use of an electro-magnet to operate the pencil of an indicator.* I thought that it might be of interest to you to know the dates when I first made and used such an attachment. Drawings were made in April, 1889, work began on first instrument in June, 1889, and experimented with off and on during the summer. First set of six indicators completed November 27, 1889. First used in regular work in testing engines, December 10, 1889.

Very truly yours,

ASA M. MATTICE.

* The device was used in test of Narragansett engine, in 1891, described in paper by Mr. J. T. Henthorn, *Transactions*, vol. xii., p. 643.

Digitized by Google

DCL.*

THE EFFICIENCY OF BOILERS: A CRITICISM OF THE SOCIETY'S STANDARD CODE OF REPORTING BOILER TRIALS.

BY F. W. DEAN, BOSTON, MASS.
(Member of the Society.)

THERE is no common matter about which there are fewer accurate and scientific ideas than about boilers, their actual performance, the reasons therefor, the proper criterion by which to judge of their performance, and the economical merit of a boiler. There is also, in the minds of many who ought to know, no idea of the limitations of boiler evaporations, nor of the magnitude or nature of boiler losses. Extraordinary, if not impossible, guarantees are made, and evidently only for the purpose of securing contracts, and trusting to good fortune to escape a penalty. Such guarantees produce injury to other boiler makers, mislead the consumer, later causing him, when he finds out the impossibility of the guarantee, a great deal of annoyance, if not expense, and are, in fact, immoral.

It is not uncommon to use a particularly rich quality of coal on a boiler trial, and to use the result, which is wonderfully good, in advertising the boiler, and thus to deceive the public. Any coal dealer probably will furnish a picked lot of coal for tests, and will send it sealed in a box car to the place of consumption. Nobody feels the advantage more than the writer of having a standard coal of uniform quality for boiler trials in this country, as they have hand-picked Nixon's Navigation Coal in England, but there could scarcely be anything more misleading than results sometimes published. A poor boiler tested with good coal may give a greater evaporation than a good boiler with poor coal.

Results may be vitiated for comparison by drying samples of coal, for moisture allowance, different lengths of time. Some-

* Presented at the Detroit meeting (June, 1895) of the American Society of Mechanical Engineers, and forming part of Volume XVI. of the *Transactions*.

Digitized by Google

times the sample is dried twenty-four hours, and thus is favorable to the boiler, while other samples may be dried six or eight hours. In order to do away with this difficulty I recommend that a well-selected sample, weighing six or eight pounds, be dried six hours in a clean pan placed on the boiler flue. This sample should be weighed with a scale which is accurate to quarter ounces.

Considerations of this kind lead to the inquiry, How can a boiler trial be reported so as to show the true value of the boiler as a generator of the possible heat in the fuel and as an absorber of the heat generated, independent of the quality of the fuel? The reply to this question is that its "efficiency" must be determined and reported. The definition of "efficiency" is as follows: the efficiency of a boiler is the ratio between the total heat which any given coal can generate by complete combustion, and that part of it which is absorbed by the water and steam heated and generated.

The next question is: How can dealers be made to base their guarantees upon efficiency, and how can purchasers be made to understand the meaning of efficiency? The answer is: Through the efforts of this Society.

This naturally leads to a discussion of the report by a committee of and to this Society, recommending a standard method of making and reporting boiler trials, as printed in Volume VI. of the *Transactions*.*

That report is emphatic in expressing the desirability of a standard method, and particularly of the importance of expressing the value of the boiler. On page 259 the report says: "The scheme must also be so complete that, if carefully and exactly followed, the precise value of the boiler may be ascertained with certainty." Yet after this the word "efficiency" is scarcely mentioned, much less recommended as a measure of value, thus wholly missing the point. Wherever used, it is in the most general sense. In one discussion it appears with its proper signification.

The report recommends, on pages 262–3, that its standards of power and economy be respectively the "commercial horsepower" and "unit of evaporation," both of which are explained. It then says, page 263, that the relative economy of boilers is

* "Report of a Committee on a Standard Method of Steam Boiler Trials," vol. vi., *Transactions*, p. 256, No. 168.

Digitized by Google

expressed by the number of units of evaporation obtained by a pound of combustible. Nothing could be farther from the truth. In fact, this conveys only the roughest idea of the relative economy of boilers, and takes no account of the fact that combustible, as well as coal, varies in heat value per pound. In a recent case that came under the writer's notice a pound of combustible contained 14,177 units of heat, and another 15,398.* The latter is 8.6 per cent. greater than the former, and therefore ought to evaporate at least 8.6 per cent. more water from and at 212 degrees. If the evaporations per pound of combustible in the two boilers using these coals had been equal, according to our Society's code they would have been equally good boilers. It is evident, however, that they would have been far from equally good. In one case the evaporation was 11.85 pounds, on this basis, while with the better coal in the same boiler it would have been $11.85 \times 1.086 = 12.87$, thus changing it from a fairly good to a remarkably good boiler. The boiler using the better coal gave a better result than it is in general entitled to, and has apparently misled both its designer and builder, as well as the public, while, if its merits had been judged by its efficiency, it would have taken its proper place as a steam generator.

Next to be considered is: How can the efficiency be determined? This is determined by knowing the number of units of heat that a pound of coal and a pound of combustible will give out when burning under perfect conditions, and the number of heat units that the water evaporated has received. In doing this the heat that goes up chimney should not be deducted from the possible heat of the coal, as is sometimes done, for different boilers allow different amounts to escape. It should be the function of a boiler to reduce this heat as much as is consistent with the temperature of the steam.

There are two methods of obtaining the heat value of the coal, one by burning a representative sample in some kind of oxygen calorimeter, and the other is to analyze the coal and equate the elements with their heat values. The oxygen calorimeter is generally preferred, but as it is considered to be the

---

* Heat in 1 pound of dry coal..... 14,675 B.T.U.
Ash..... 4.7 per cent.

Heat in 1 pound of combustible..... $= \frac{14\,675}{100 - 4.7} = 15{,}398$ B.T.U.

Digitized by Google

better the nearer its result comes to that computed from the analysis, the writer prefers to use the analysis and thus avoid the imperfections of the calorimeter. As most engineers will wish to have their coal analyzed, it is best to use this for heat value and avoid the expense of a calorimeter determination. This is a point, however, that the Society must determine.

Our standard method recommends coal analysis, but is silent as to what use is to be made of it. Neither does it mention the oxygen calorimeter, nor does it speak of computing the heat value of the coal from the analysis.

Having now called attention to the defects of the standard method of making trials and judging of the value of boilers, I wish to add that wherever there is an economizer, a boiler trial should in general include a determination of the effect of the economizer. These devices are now very common, and in many cases have sufficient heat to work upon to convert a wasteful plant into an economical one.

Concerning the standard form for reporting trials, it has an insufficient number of items, and also contains some useless ones. To criticise its wording and items, of what value are the words in item 26, "and apparently evaporated"? In item 29 the word "equivalent" is superfluous. In item 31, the words "from actual pressure and temperature" are superfluous.

The item 34, "Commercial Evaporation," is of questionable value, and should be dropped.

In items 36, 37, and 38 the assumption of one-sixth refuse should be abandoned; for why, henceforth, assume the refuse?

Item 38 should be changed from "Per square foot of least area for draught" to "Per square foot of boiler-tube opening." This item is of little or no importance, and as it is in general impossible to determine the least area for draught, it is best to have something easily determined, definite, and possibly of some use.

The items 40, 41, and 42, so far as they depend upon "temperature of 100 degrees Fahr. into steam of 70 pounds gauge pressure," should be abandoned, as these are conditions of past practice, not now often met, and soon to be extinguished. Here, also, the "least area for draught" should be replaced by "tube opening."

The commercial horse-power unit has become fixed and valuable, but should be stated with reference to the evaporation

Digitized by Google

from and at 212 degrees Fahr. only, as 100 degrees Fahr. and 70 pounds are obsolete. In order to avoid the $\frac{1}{2}$ in $34\frac{1}{2}$, it is recommended that 35 be used. This differs from $34\frac{1}{2}$ by less than $1\frac{1}{2}$ per cent., and as the horse-power of a boiler is very flexible, the proposed change is not harmful in any respect, nor misleading, when comparisons are made between powers by the old and proposed units. Its history can be readily traced by future students.

It is of great importance to determine the unit for comparison on an efficiency basis. It would be commercial if the efficiency on coal were taken, but this would require picking out unconsumed coal from the refuse, and would assume that equal percentages of unconsumed coal fell through the grates in different cases. It is, therefore, best to use the efficiency based on combustible, thus:

$$\text{Efficiency} = \frac{\text{Heat usefully absorbed from 1 lb. of combustible.}}{\text{Heat value of 1 lb. of combustible.}}$$

This also is the quantity on which the guarantee should be based, and the contractor should have the following clause in his specifications: We guarantee that our boiler will give an efficiency of —— per cent. referred to combustible consumed on a test of —— hours' duration.

Unless this Society shall take a stand upon this matter and revise its standard method it will not be to its credit, as the present code has become open to criticisim of this sort by the passage of time.

An improved form of blank is appended, embodying the changes suggested in reporting boiler trials.

RESULTS OF BOILER TRIALS FOR
KIND OF BOILER,
KIND OF FUEL.

1.	Date of trial.....	
2.	Duration of trial.....	hours.
3.	Number of boilers in use.....	
	Dimensions and Proportions.	
4.	Grate surface of each boiler.....	sq. ft.
5.	Grate surface, total.....	sq. ft.
6.	Water-heating surface of each boiler.....	sq. ft.

Digitized by Google

7.	Water-heating surface, total	sq. ft.
8.	Superheating surface of each boiler	sq. ft.
9.	Superheating surface, total	sq. ft.
10.	Total heating surface	sq. ft.
11.	Ratio of water-heating surface to grate surface	
12.	Ratio of total heating surface to grate surface	

Average Pressures.

13.	Steam pressure in boiler, by gauge, per square inch	lbs.
14.	Atmospheric pressure, per square inch	lbs.
15.	Absolute steam pressure in boiler, per square inch	lbs.
16.	Force of draught in column of water between damper and boiler	ins.
17.	Force of draught in column of water beyond damper	ins.

Average Temperatures.

18.	Of external air	deg.
19.	Of fire-room	deg.
20.	Of feed-water before entering economizer	deg.
21.	Of feed-water before entering boiler	deg.
22.	Of escaping gases after leaving boiler	deg.
23.	Of escaping gases after leaving economizer	deg.
24.	Of steam	deg.

Fuel.

25.	Moist coal consumed	lbs.
26.	Moisture in coal	per cent.
27.	Dry coal consumed	lbs.
28.	Wood consumed	lbs.
29.	Coal equivalent of wood	lbs.
30.	Total dry coal consumed, including wood equivalent	lbs.
31.	Total dry refuse	lbs.
32.	Total dry refuse	per cent.
33.	Total combustible (items 30–31)	lbs.
34.	Dry coal consumed per hour	lbs.
35.	Combustible consumed per hour	lbs.

Quality of Steam.

36.	Quality of steam, dry steam being taken as unity	
37.	Percentage of moisture in steam	per cent.
38.	Number of degrees superheated	deg.

British Thermal Units.

39.	Number of heat units in a pound of dry coal, by analysis	B.T.U.
40.	Number of heat units in a pound of combustible, by analysis	B.T.U.
41.	Number of heat units in a pound of dry coal, by oxygen calorimeter	B.T.U.

Digitized by Google

42. Number of heat units in a pound of combustible, by oxygen calorimeter	B.T.U.
43. Percentage of 41 to 39; of 42 to 40	per cent.
44. Specific heat of superheated steam at constant pressure	0.48
45. Heat units absorbed by boiler per pound of steam generated	B.T.U.
46. Heat units absorbed by boiler and economizer, per pound of steam generated	B.T.U.
47. Total heat units absorbed by boiler	B.T.U.
48. Total heat units absorbed by boiler and economizer	B.T.U.
49. Heat units imparted to boiler per pound of dry coal	B.T.U.
50. Heat units imparted to boiler and economizer, per pound of dry coal	B.T.U.
51. Heat units imparted to boiler per pound of combustible	B.T.U.
52. Heat units imparted to boiler and economizer, per pound of combustible	B.T.U.
53. Factor of evaporation for boiler	
54. Factor of evaporation for boiler and economizer	

Water.

55. Total water pumped into boiler	lbs.
56. Water actually evaporated, corrected for quality of steam	lbs.
57. Equivalent water from and at 212 degrees F., boiler only	lbs.
58. Equivalent water from and at 212 degrees F., per hour, boiler only	lbs.

Evaporative Performance.

59. Water actually evaporated, per pound of dry coal	lbs.
60. Equivalent per pound of dry coal from and at 212 degrees F., boiler only	lbs.
61. Equivalent per pound of dry coal from and at 212 degrees F., including economizer	lbs.
62. Water actually evaporated per pound of combustible.	lbs.
63. Equivalent per pound of combustible from and at 212 degrees F., boiler only	lbs.
64. Equivalent per pound of combustible from and at 212 degrees F., including economizer	lbs.

Efficiencies.

65. Efficiency of boiler, based upon dry coal (item 49 ÷ item 39)	per cent.
66. Efficiency of boiler, based upon combustible (item 51 ÷ item 40)	per cent.
67. Efficiency of boiler and economizer, based upon dry coal (item 50 ÷ item 39)	per cent.
68. Efficiency of boiler and economizer, based upon combustible (item 52 ÷ item 40)	per cent.

Digitized by Google

Commercial Horse-power (boiler only).

69. On basis of 34½ pounds of water from and at 212 degrees F., per hour by boiler	H.P.
70. Number of square feet of heating surface per horse-power	sq. ft.
71. Horse-power per square foot of grate surface	H.P.
72. Horse power, builders' rating, at — square feet per horse-power	H.P.
73. Per cent. developed above or below rating	per cent.

Rate of Combustion.

74. Dry coal actually burned per square foot of grate surface per hour	lbs.
75. Dry coal burned per square foot of tube opening per hour	lbs.
76. Dry coal burned per square foot of water-heating surface per hour	lbs.

Rate of Evaporation.

77. Water evaporated per square foot of heating surface per hour from and at 212 degrees F.	lbs.
78. Water evaporated per square foot of grate surface per hour from and at 212 degrees F.	lbs.
79. Water evaporated per square foot of tube opening area per hour from and at 212 degrees F.	lbs.

If the discussion of this paper should prove favorable to the suggestions herein made, the writer proposes to offer the following resolution:

Resolved, That the Council of the American Society of Mechanical Engineers be requested to appoint a Committee of the Society to consider the Standard Method (of 1886) of Steam Boiler Trials, reported by a Committee of the Society at that time, and if, in the judgment of that Committee, a revision of the standard of 1886 is desirable, that Committee shall report its recommendations for a new Standard Method (of 1895) for conducting Tests of Steam Boilers.

DISCUSSION.

Mr. Geo. H. Barrus.—It has been understood for a long time that the evaporative performance of a boiler, expressed in terms of water evaporated per pound of coal, or even per pound of combustible, furnishes no adequate idea of its efficiency as a steam generator, unless some knowledge is had of the general character of the fuel to which it relates. Even with such

Digitized by Google

knowledge the information is unsatisfactory, owing to the wide variation in the value of different coals of nominally the same class. This whole question has been gradually assuming definite shape, until it is now practically settled that, unless the calorific value of the fuel used on a boiler test is known by actual trial, and the relation between the heat utilized by the boiler and the total heat of combustion of the coal is ascertained, no reliable information is obtained as to the real performance. The well-worn term "efficiency" characterizes the relation noted, but this term has not been applied in common parlance to boiler-work until recently. The matter has grown into some importance in a commercial way, since contracts for boilers are at the present time being executed in which the compensation is based on the percentage of "efficiency" attained, where formerly it was based on the amount of water evaporated with a given kind of coal.

Ten years ago the Society made a careful study of the subject of boiler tests, and, through its committee, devised a Standard Code of Rules for conducting such tests. This code has been generally adopted by the profession. As proof of its wide acceptation, the fact may be mentioned that the code has been reprinted and embodied in a number of trade catalogues of firms engaged in the steam business, and it has been introduced into several text-books and standard works on steam engineering. Furthermore, it is referred to in many boiler contracts executed during the past five years.

The Society's consideration of the subject occurred previous to the agitation which has resulted in basing the performance of boilers on "efficiency" rather than on evaporation; and naturally little reference is made in the code, or in the report which accompanies it, to calorific determinations. During the period which has elapsed since the code was accepted by the Society, considerable advance has been made in determining the calorific value of coal; and there is at the present time a number of parties who are engaged in making these determinations in commercial work. Just now, also, there are in progress, in more than one college laboratory, investigations upon this subject, having in view a comparison of different methods of making calorimeter tests, and of different forms of instrument. It is evident that sooner or later these investigations will put the Society's code "behind the times," if they have not done so

Digitized by Google

already; and there is immediate need of a revision of the Standard Code of Rules to bring them up to date. I am therefore in hearty sympathy with Mr. Dean's recommendation, in so far as it relates to amending the work of the former committee so as to include the methods to be followed in determining efficiency. It would be well, if such action is taken by the Society, to empower the committee to investigate the subject of coal calorimetry, so that they may be able to recommend a standard method of conducting this important part of a boiler test. As to the *personnel* of the committee, it seems to me that, so far as may be, it should include the members of the former board, for their work is to be commended, from whatever standpoint it is viewed.

I cannot endorse the recommendation of the paper that the calorific determination be made from a chemical analysis instead of a calorimeter test. A chemical analysis for this purpose is objectionable, on the broad ground that the work must be intrusted to a chemist. The engineer should be responsible for the efficiency test from first to last. He cannot, as a rule, satisfy himself regarding the chemical determinations so as to be able to vouch for them. The person conducting a boiler test should be capable of judging from his own knowledge as to the correctness of all the data. The process of determining the calorific value of coal in an oxygen calorimeter is quite as simple and easily comprehended as the boiler test itself. This reason alone furnishes sufficient ground for using the direct determination of the calorimeter, instead of the indirect method based on analysis, which, at best, is complicated and uncertain.

Prof. R. H. Thurston.—I am inclined to think, with Mr. Dean and Mr. Barrus, that it would be well to revise the Code of Boiler-Trial Reports, and think it might be well to have all such codes of practice revised at stated intervals, if not kept under constant revision by proper committees; if for no other reason, to give assurance to members and to those who may have occasion to employ them that they are maintained as representative of best contemporary knowledge and practice. Improvements in the arts and advancement in the sciences contributory to engineering are so constantly taking place, and so rapidly, in many directions, that what is right to-day may be obsolete another year. It should be practicable to secure a code which should be at once rigidly exact, as judged by the methods of the best scientific processes,

Digitized by Google

and yet simple enough to permit its application with satisfaction by every engineer of ordinary information and attainments.

Basing results upon a statement of evaporation per unit weight of coal is too crude and uncertain to be allowed; the reduction of data to performance per pound of combustible is generally satisfactory, with anthracite coals; but a determination of the calorimetric value of the coal, and analysis into carbon, hydrocarbon, and ash and moisture, are required for a full determination of the real value of the boiler and of its efficiency, as needed for comparison of one with another, and of all with a common standard. All this is now easily done, and there is no reason why the Code should not prescribe scientifically exact methods for adoption when the case is of sufficient importance to demand their employment. We do, however, find chemical analysis of bituminous coals usually very helpful.

The case is made particularly clear now that it has become possible to substitute for the old and tedious methods of "bomb" calorimetry the later and simpler methods, giving results in minutes that formerly took hours, and with greater accuracy and freedom from the risks coming of necessary and numerous checks, standardizations, and computations. Such methods as that used in our laboratories, as described in the paper before the Society, will prove most admirable aids in the promotion of easy and accurate measurements of the calorimetric value of the fuel. Where, as here, the several efficiencies of fuel, of furnace, of boiler, and of storage and transfer of heat, when exact work is to be done, must be separately measured and discriminated, every process tending to simplify and improve practical everyday work becomes of inestimable value. Properly employed, either of several methods of measuring the calorific value of the fuel may be employed, and with substantially and practically equal satisfaction, so far as the final outcome is concerned. That which gives accurate results in the quickest, cheapest, and most certain way will be accepted by engineers. But, even after the thermal content of the fuel is ascertained, it by no means follows that equally good boilers will give the same efficiencies with different coals of equal total thermal content. We find that the bituminous coals often surrender less heat, proportionally, than the anthracites, and this makes it still difficult to rate the boilers comparatively when using different classes of fuel. This fact is no argument, however, against the use of every means possible to

Digitized by Google

make the comparison as nearly exact as is practicable, and the calorimetric measurement of the fuels *does* give us the power of taking one more step toward that end.

I am inclined to agree with Mr. Dean in most of his criticisms of the Code as it stands. It was evolved out of the older methods and practice, and it would be a miracle were it to have proved perfect as a first attempt to construct an authoritative code.

As to Mr. Barrus's strictures on the chemical analysis, I am not inclined to offer so decided an objection to its adoption. It is often most convenient to the engineer to send his samples to the chemist, and the chemist is coming to use the same methods, in large part, that we are now coming to employ in our own calorimetry. The Code should, I think, give the practitioner the best ways, *and the best alternative ways*, as well, of reaching his results. The "bomb calorimeter" will now be found in every chemical laboratory of importance, and every chemist doing this class of work will supply himself with the best apparatus obtainable for the purposes of analysis, both chemical and thermal. It looks, now, however, as if the engineer might presently give the chemist better methods of calorimetry than those which have made Berthelot and Hempner famous. We are making thermal analysis exact, rapid, and handy.

Mr. H. De B. Parsons.—I fully concur in Mr. Dean's recommendations for a revision of the Society's rules for reporting boiler trials, and I am also in favor of Mr. Barrus's suggestion to empower the new committee, if appointed, to investigate fully and report on the methods of coal calorimetry.

It appears to me that if this latter investigation should prove little difference to exist between the heating values of coal, as determined by theoretical calculation from a chemical analysis, and the experimental value, as determined by the calorimeter, that due value should be given to the chemical work. I cannot agree with Mr. Barrus that a chemical analysis would be objectionable, because the engineer should be responsible for the efficiency test from first to last, and therefore cannot trust a chemist, as being an outsider. A chemist can be just as well trusted as the reports of the various assistants or observers which are necessary in all boiler-testing work. There is no more trouble or danger in sampling coal for analysis than in sampling for the calorimeter, and the accuracy of the analysis will be just as great as that from

Digitized by Google

the calorimeter. Now, if the committee reports that the heating value is the same, as determined by both methods, within the limits of error allowable, the chemical method should be allowed, because in the majority of cases it is the simpler to apply. It is always easy to procure a correct analysis from a reliable chemist, while it would be necessary for most experimenters to send the coal sample to some college laboratory to obtain a report from the calorimeter. Here it would be just as necessary to trust to an unknown man as in the chemical test to which Mr. Barrus objects. Should the calorimeter give results not in concordance with the chemical method, then, of course, the latter should be abandoned in favor of the former.

Mr. William O. Webber.—I have read with a great deal of interest Mr. Dean's criticism of the Society's Standard Code of Reporting Boiler Trials, read at the Detroit meeting just past, and Mr. Barrus's discussion of the same; and wish to add my testimony, as being in full accord with Mr. Dean's recommendations, so as to include the determining of the efficiency of the boiler in all standard boiler tests. I do not agree with Mr. Dean that the British thermal units should be determined from chemical analysis, but agree with Mr. Barrus that they should be obtained from a coal calorimeter test instead, as I believe that the results obtained by calorimetric tests are more nearly similar to the conditions incidental to a boiler test than those obtained by chemical analysis. I would, however, in the interests of making all reports as simple as possible, cut out as many items which apparently reiterate in another form results already once stated. It has always seemed to me that after stating the amount of coal combustible it would be as well to leave further deductions, based on this, out of the report, as they are somewhat misleading to the average mind, and do not coincide with actual conditions.

If we had a standard test coal this item would not be necessary, and as a statement of the evaporative value of a boiler the equivalent per pound of dry coal from and at 212 degrees conveys just as much information, and I believe of more practical value, than the same equivalent per pound of combustible. I would also criticise the number of items which Mr. Dean has included under the heading of British Thermal Units. It seems to me that so many statements in this designation would only tend to confuse the average reader, and I would suggest, therefore, that these designations be kept as close as possible to the three follow-

Digitized by Google

ing items, which really convey the whole information desired, viz.: Total heat derived from coal in British thermal units, or total heat units absorbed by boiler, as used by Mr. Dean. Number of heat units in a pound of dry coal by calorimeter, and the efficiency of the boiler, being one item divided by the other. And I would also suggest, after correcting the basis and wording of the items, under commercial horse-power, as suggested, the item, pounds of dry coal burned per hour per horse-power developed; and if the value of the coal delivered, per ton, can be obtained, the items of the cost per 1,000 horse-power per hour developed, and cost per 1,000 pounds of dry steam, would be of great practical value. I would also suggest, as the gas analysis of the escaping gases plays so important a part in the consideration of the boiler, and their determination is so easily made by the improved Orsart apparatus, that the following items be included in a standard report: carbonic acid gas (per cent.); oxygen, carbonic oxide, pounds of flue gas per pound of carbon; and possibly a statement of the heat balance, as drawn off by Mr. R. D. Hale, of the Boston Society of Engineers, in a report on methods of making tests at the Edison Station, in which he gives the following items:

Heat Balance, Dr. (All referred to 32 degrees Fahr., in units.)

In the coal, in the water, in the air.

Heat Balance, Cr.

By dry steam, by flue gas (extra temperature of gases), by evaporation of water in coal, by priming or moisture in steam, and by radiation, and unaccounted for.

I also like to see a very full description of the boilers under test, giving, besides the grate surface, water-heating surface, etc., the actual length, width, and opening of grate, the distance from the grate to the shell of the boiler, the diameter and length of the boiler, diameter, length, and number of tubes, and the height and area of stack, and the ratio of the stack area to the grate area. I think it would also be of advantage to include, next to the item, Percentage of Ash and Refuse in Dry Coal under actual conditions, a statement of the percentage of ash and refuse by analysis, as showing the difference in the behavior of the coal used under the two different conditions.

To sum up my whole discussion, I wish to agree fully with the object of Mr. Dean's paper, as a very desirable step in the right direction, but to advocate giving all the information possible in as

Digitized by Google

few and comprehensive items as possible, avoiding repetitions of results obtained by different methods of calculation, and accepting some one form of statement as standard.

Mr. John R. Wagner.—I was in hopes that the movement which Mr. Dean is endeavoring to bring about would be agitated at the Chicago meeting. I am exceedingly anxious to see amendments to the Society's Standard Code, not so much from the standpoint of Mr. Dean and Mr. Barrus—that is, to determine the efficiency of the boiler, to show whether the guarantee has been fulfilled—but from the standpoint of an engineer who is anxious to study the question of boiler performances and present systems of firing.

In compiling the results of a large number of boiler tests by the best American authorities, I was impressed with the amount of information wanting to enable me to account for the high or low duty or to locate the losses. The reports of tests made in Europe nearly always included information and data sufficient to make a complete study of the boiler and furnace performance.

I would suggest to amend the improved form of blank offered by Mr. Dean, by including not only an analysis of the coal, but also a sizing test; an analysis of the ash or refuse from the ash-pit, to determine the loss there and to have a check on the total ash produced (by calculation), and an analysis of the stack gases, to determine the excess and actual quantity of air. I would also suggest that the committee appointed to take up this question consult the paper read by my friend, the late Eckley B. Coxe, before the New England Cotton Manufacturers' Association, at Providence, R. I., last April, the title of which is: "Some Thoughts upon the Economical Production of Steam, with Special Reference to the use of Cheap Fuel."

Mr. Coxe expected to read a paper at this meeting, embodying some of the matter contained in the above paper, and which would have had a direct bearing on the question of boiler tests, and showing the importance of data invariably omitted from the reports of boiler tests.

It seems to me that the method of getting at the efficiency of a boiler, as proposed by Messrs. Dean and Barrus—that is, based on the calorific value of the fuel—is not altogether satisfactory, as the boiler should not be accountable for functions belonging to the furnace. In other words, the very best boiler may be

Digitized by Google

made to have a very low efficiency by a poorly managed furnace; that is, by allowing a large excess of air to pass through the furnace.

If, however, we have an analysis of the stack gases, of the ash produced, and of the fuel used, we can locate the cause for the high or low efficiency.

From my experience with the oxygen calorimeter during the past three years, I think it advisable for the next few years (until fuel calorimeters have been further improved) not to rely on calorimetric tests alone, but check them up by chemical analysis of the fuel, especially in the case of anthracite, where a proximate analysis will give more concordant results (unless determined in the Mahler calorimeter). (See valuable paper, special bulletin, by Professors E. E. Slossan and L. C. Colburn, of the University of Wyoming, Laramie, Wyo.)

Mr. A. F. Nagle.—In the main, I see no objection to the proposed changes in the code governing boiler tests, suggested by Mr. Dean. In the revised code, Article 59, "Water actually evaporated per pound of dry coal" should be preceded by "Water pumped into the boiler divided by coal shovelled into the furnace," for that is what the practical man of affairs wants to know and has to pay for.

On the whole, the matter of *dry* coal is apt to be an error, or deceit, or fraud, one of so very little practical value that I have grave doubts of the wisdom of retaining it outside of laboratory work.

Would it not be better to base all calculations upon coal as found and paid for, and have one paragraph simply giving its moisture as a guide in the selection of coal?

There is the further objection to correcting for moisture in soft coal in that it is commonly believed that moisture actually *adds* to its evaporative efficiency.

I am aware that this belief does not rest upon scientific proof, but skilful firemen, like good blacksmiths, *wet soft coal* before using it. They *know* it makes a hotter fire, and perhaps a little thought will reveal a reason. The moisture holds the fine carbon particles together, preventing their escape up the chimney, and holding them together until they can be raised to a temperature sufficiently high for ignition.

No, I think I would strike out all pertaining to *dry* coal—certainly when applied to soft coal.

Digitized by Google

"Commercial Horse-power (boiler only)."

I confess I do not know what is meant by "boiler only." What else are we talking about?

Item 69 meets with my approval. I see no reason for continuing an obsolete rating of 30 pounds of water from 100 degrees feed to 70 pounds steam. It is never obtained in practice without a process of calculation, and so serves no simple, direct way of obtaining the horse-power of a boiler. If a calculation be necessary, we may as well make one and be done with it.

I do not agree with Mr. Dean that 35 pounds would be preferable to 34½ pounds of water from and at 212 degrees per boiler horse-power.

This matter was so fully discussed at the time the former code was adopted that scarcely anything new can be said. Simply to avoid a fraction is not reason enough. It has been so very difficult to get the standard we have that to open the subject again for the sole purpose of avoiding a fractional calculation is not reason enough to compensate for the complications and new disputes which would certainly arise if we attempt to make the change proposed.

Mr. F. A. Scheffler.—I have read with a great deal of interest the comments Mr. Dean has seen fit to make in his criticism of the Society's present Standard Code of Reporting Boiler Trials. I am heartily in favor of his suggestion to appoint a committee to investigate the faulty features of the present standard, with a view of the Society's eventually adopting a new set of rules and regulations for boiler trials. The guarantees made by many parties, who are more anxious to sell goods than they are to tell the truth, are altogether against the best principles upon which any kind of business should be based. If this Society can fix a standard wherein the question of efficiency is the resultant factor, and it is generally known throughout the country that the question of number of pounds of water evaporated per pound of coal is not being universally used as a standard for comparison, the Society will have accomplished a great deal of good for the benefit of engineers in general and the boiler business in particular.

The writer knows of a case where a certain manufacturer of boilers actually advertised in the trade journals that, with Pittsburg Slack Coal, that particular boiler had evaporated in a specified test 14½ pounds of water from and at 212 degrees per

Digitized by Google

pound of combustible. Had this party advertised and claimed that the boiler would show an efficiency of 125 per cent., he probably would have come to the conclusion very quickly that he was the laughing-stock of his competitors and purchasers in general, for he would certainly not have dared to offer a boiler to even the most ignorant of purchasers should he claim more than 100 per cent. efficiency; such a purchaser might have allowed him 10 per cent. to come and go on, but he surely would not consider anything higher than 90 per cent., and any one who can conscientiously show to-day an efficiency of 90 per cent. can afford to shut up his office and sell out for a mint of money.

Should a committee be appointed by this Society, I would also suggest that this committee devote some time to investigate and suggest what shall be determined a horse-power on the heating-surface basis, and at the same time fix, if possible, a certain amount of draught, at the point where the gases leave the boiler, as a standard draught on which the amount of water evaporated per square foot of heating surface should be based. The question of heating surface in a boiler very seriously affects its efficiency, and several manufacturers endeavor to induce their customers to purchase boilers on the basis of only 7½ square feet of heating surface per horse-power, others offering 9, some 10, and others 11½. There is no question but that the boiler made on the basis of 7½ square feet heating surface per horse-power will have to evaporate 50 per cent. more water for each square foot per hour than the boiler which has 11½ square feet, providing both agree to call a "horse-power" 34½ pounds of water evaporated from and at 212 degrees, which is the Society's recommended standard. With the same draught neither of the above boilers can evaporate any more water per square foot of heating surface than the other with the same coal and all other conditions being equal. I do not agree with Mr. Dean that the best method of determining the value of the coal is by analysis, for the reason that there are several calorimeters in use to-day which are so very trustworthy in the results obtained by them that the value of the coals can be much more accurately determined and for considerably less money than by an analysis, which, as Mr. Barrus states, is at best complicated and uncertain, and requires a chemist to make such analysis.

Mr. E. D. Meier.—I have read Mr. Dean's paper with much interest, and am in favor of a reform of the code for conducting

Digitized by Google

boiler tests. But I cannot agree with him in regard to retaining that indefinite quantity, the "pound of combustible," in the code at all. I have no doubt that the first intention was to deduct only the ashes and clinker from the coal, and call the balance the number of pounds of combustible. But, as Professor Potter has pointed out in his discussion, this would not be fair to coals which contain a lot of volatile matter which is not combustible, nor would it account for the heat lost in evaporating the characteristic moisture in the coal, which must be done by a portion of the combustible matter, thereby robbing the boiler of so much heat. I have no doubt that the committee which drew up the code acted within the limits of what was then the best practical knowledge on the subject. Naturally they had in view the high-grade coals with which they were familiar, and with which most of the boiler trials then known to the engineering fraternity of the United States were conducted.

At that time accurate tests of boiler or steam-engine performance were rarely required elsewhere than in the Eastern States; but with the extension and enlargement of the manufacturing industries of the Mississippi Valley, of the Rocky Mountain mining districts, and of the Pacific Slope, and the general introduction of large electric plants for light, power, and railway work in almost every good-sized town in the country, both boiler and engine tests have become a daily necessity. And those of us who have to deal with the abundant, free-burning, but low-grade coals of the Mississippi Valley, the lignites of Colorado, and the light coals of the Pacific Slope, are fully convinced that the pound of combustible, made the basis of comparison in boiler tests, is not only of no value, but is positively misleading. There is a vast difference in the amount of losses due to impurities of the coal between Cumberland or Youghiogheny coal, showing from 4 to 6 per cent. of ash, and those that we have to reckon with when we are burning Illinois coal, running from 10 to 18 per cent. of ash, as also between anthracite with 80 per cent. of fixed carbon and 4 per cent. of volatile matter, or with lignites having 30 per cent. of fixed carbon and 38 to 40 per cent. of volatile matter. The deduction of the ash does not cover the ground for several practical reasons. There are many Western coals with which practice shows it to be necessary to clean fires every three hours, and it requires the utmost skill in the fireman to prevent loss of good coal or half-burnt coke in pulling out the clinkers.

Digitized by Google

Many automatic devices which do well on the richer Eastern coals have entirely failed when applied to Western coals. I have seen some of them which gave admirable results in combustion and evaporation for a few hours, but when the fires had to be cleaned the labor was akin to that required in handling a puddling furnace, and all the good results of three hours of fine combustion were lost during five or ten minutes consumed in cleaning. Not only the quantity of the ash and clinkers, but their physical and chemical condition, affect this question. A huge mass of clinker drawn out at a red heat means a direct loss of a large quantity of heat which has been absorbed by this clinker, and can in no manner be returned to the furnace. Another source of loss is in the passage of a large quantity of cold air over the fire during the four to six minutes necessarily consumed in cleaning, with the fire-doors wide open. After this there is generally a period during which the thin fires are being re-ignited, when the temperature of the furnace is necessarily reduced and more air than required for combustion passes through this thin body of fire, causing a reduction of the furnace temperature. The greater quantity of ash and soot formed by these bituminous coals, with an excess of volatile matter, will necessarily affect the condition of the heating surfaces more than the much smaller quantity resulting from the combustion of Cumberland or anthracite coal. In order to burn the combustible portion of this volatile matter a very high furnace temperature is necessary, and unavoidably the non-combustible portion must be raised to the same temperature. This again absorbs heat which might otherwise be made available in making steam. For these reasons a slow or moderate combustion of these coals is impracticable, and in some cases even impossible. We have to deal, therefore, with higher temperatures, resulting in greater losses by radiation through walls and fire-fronts, and by reason of higher stack temperature. All these causes combine to make it impossible to realize as high a percentage of the fuel value of the coal as can be done by the same boiler with the same furnace and the same skill in handling from coals richer in fixed carbon; and I do not see how Mr. Dean's substitution of the percentage of the calorific value in the combustible for the percentage of that in the whole coal will help the matter. There is another reason why the pound combustible is a bad element to introduce into a boiler test. Suppose the man handling a certain boiler finds during the first hour or

Digitized by Google

two that he is falling behind his guarantee. If his guarantee is based on the pound of actual coal, his only recourse is the utmost care and skill during the remainder of the test; but if his guarantee be based on the pound combustible, there is a large loophole open of which poor human nature will readily avail itself. It is only necessary to pull out a good quantity of half-burnt coal with the clinkers and ashes, thus increasing the percentage of ash, and decreasing by an equal amount the apparent number of pounds of combustible consumed during the test. I have known cases where, in the test of two rival boilers using the same coal from the same mine and the same carload, the percentage of ash in the one was considerably greater than in the other. The result was that the one showed a better result per pound of coal, the other a better result per pound of combustible. Which was the better boiler for the steam user, who buys coal with the ash in it, and which, therefore, should the conscientious engineer recommend? I believe with Professor Potter that a new and larger committee than the former one should be instituted for revising the Code of Rules for Boiler Tests. As the work of the first committee was so well done, with the light then available, I believe they should be made members of this committee. To them should be added enough others to represent all the great coal basins which supply our industrial demand. Such a committee should establish five or more standard coals, representing these different districts, and on these coals tests of boilers for important public works or large industries should be made. The public will be quick to see the advantage which a comparison of boilers under the actual conditions of the best practice for each district would give; and it would not be long before engineers could deduce fair approximate comparisons of the best performances on these different coals, applicable to all districts.

Mr. C. V. Kerr.—This criticism by Mr. Dean is timely and should result in revision of present methods of judging the performance of boilers. To be of general service, boiler tests should be comparable, but they can scarcely be justly so under present practice.

I would suggest that for "combustible," in the proposed formula for boiler efficiency, "dry coal" should be substituted when coal is the fuel. The usual oxygen calorimeters will give the heating power directly in terms of dry coal, the amount of moisture pres-

Digitized by Google

ent being determined while preparing the sample for the calorimeter. The weight of ash may be found either from the residue in the calorimeter or by proximate analysis. But the weight of combustible, as determined by the boiler test itself, would usually be smaller than that calculated from per cent. of ash thus found, on account of the formation of clinker in the boiler furnace. The resulting boiler efficiency will then be too high. On the other hand, it may be objected that the "dry coal" basis will make the fireman a part of the plant and a factor in the efficiency. The effect certainly will be to encourage firing to the best advantage. But really is not skill in securing complete combustion of fuel more desirable, both from ethical and commercial standpoints, than that which is chiefly concerned with picking unburnt coal from a mass of cinders and ashes? I should say that the best method of boiler testing will be that which takes no account of the weight of ashes formed, except as a matter of interest.

Further, if we are to measure efficiency by the ratio of heat utilized to heat supplied, as it should be measured, why not measure the horse-power of the boiler in a similar way? The boiler horse-power now in use, 30 pounds of water per hour from 100 degrees feed to 70 pounds gauge, is equivalent to 33,305 British thermal units, more or less, depending on the steam tables used in calculation. Then, suppose we take 33,000 British thermal units per hour as the measure of a boiler horse-power. We will then have, from any given boiler test,

$$E = \frac{HS}{CU} \text{ and } B = \frac{HS}{33{,}000T}$$

in which

E = efficiency of boiler.
B = boiler horse-power.
H = heat per pound of steam formed.
S = weight of steam formed.
C = weight of dry coal used.
U = heat units per pound of dry coal.

The value of B, thus found, would be slightly larger than by present rules, but, as engines are growing more economical of steam, the fact may, with propriety, be recognized in affirming the power of a given boiler. Under these formulas the engineer would need to determine (1) the heating power of fuel and the

Digitized by Google

weight used, and (2) the weight of steam formed and its quality. Other data might be of interest, but the above would suffice to fix the efficiency and power.

Prof. Jas. E. Denton.—To be able to reduce the performance of a boiler with any one fuel to its equivalent in terms of some other, or some standard fuel, is unquestionably an important desideratum; and, so far as Mr. Dean's paper aims to project an inquiry as to the feasibility of establishing acceptable rules for this, I am heartily in favor of its ideas.

The prevalence of the results of tests of performance in commercial transactions with boilers, and the fact that determinations of the heating power of fuels by the use of the oxygen calorimeter is rapidly becoming a regular factor in boiler tests, makes it probable that a review of the Boiler Committee's rules in the near future will improve their usefulness. I do not think, however, that the question of compensating for the difference in quality of all grades of coals can be exactly reduced to the simple formula which Mr. Dean calls "efficiency."

If in a boiler furnace the percentage of ashes was the same as that obtained by analysis, or in an oxygen calorimeter, his formula would apply as proposed, but the actual ashes commonly largely exceeds this percentage by an amount representing the partially consumed coal, which may differ with the same fuel in successive tests. Unless, therefore, the heat obtained by analysis, or calorimeter, is discounted properly, to allow for the difference between the practical ash and the analysis ash, respectively, the value given by the formula in the paper is greater than the true efficiency.

In order to arrive at practical rules on the subject, I believe we must adopt some standard fuels for different classes of practice, and determine by experiment the relation for these fuels between the heat available by calorimeter or analysis and by use under boilers, respectively. Under this belief we are just putting into use at Hoboken the following apparatus:

It consists of a vertical boiler (Fig. 276), in which we propose to obtain the calorific power of the coals by burning them in the ordinary way and at the various rates of combustion. In this boiler we have a grate which is mounted so that it, together with all the coal and ashes fed up to any time, can be weighed accurately, and thereby the exact combustible for any interval determined.

Digitized by Google

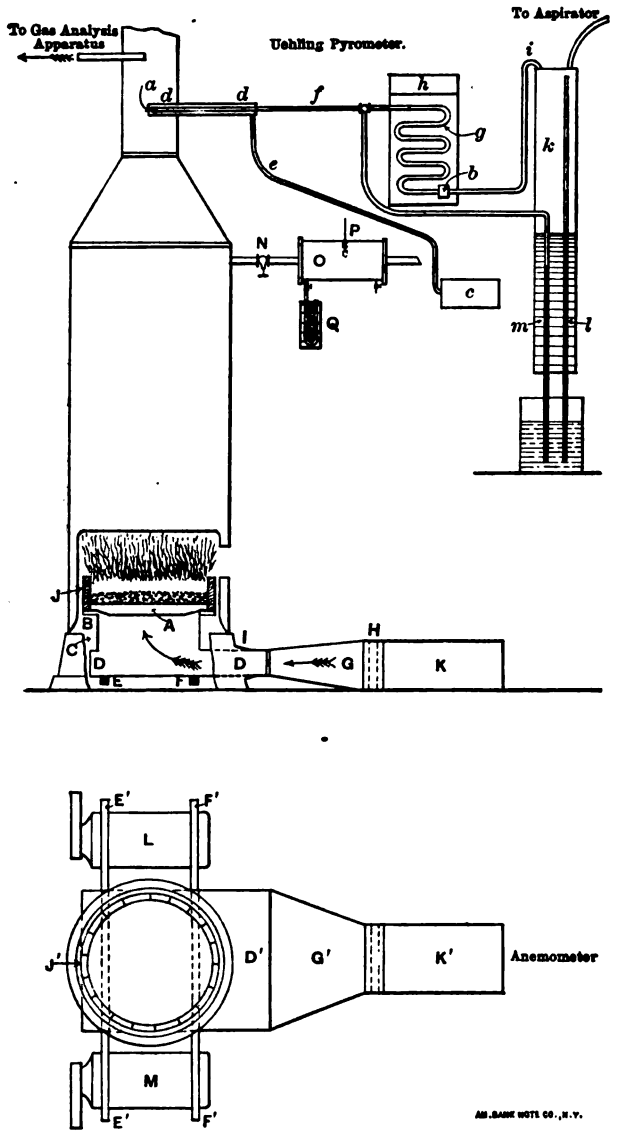

FIG. 276.

We have the grate *A* mounted over an upright cylinder *C*, which receives the ashes or coal dropping through the grate. This cylinder joins into a box, the side view of which is *D*, and the plan of which is *D'*, connected with the pipe *K*. All the air

Digitized by Google

which goes to the grate passes through the pipe *K*. To determine the amount of air passing through the grate we analyze it, and also measure it by means of an anemometer.

The quality of the steam is determined by throttling the whole amount of steam generated by the boiler through the drum *O*.

To determine the temperature of the flue gases, we use a Uehling & Steinbart pyrometer, which gives very accurate results for any temperature up to 2,000 degrees Fahrenheit.

Prof. D. S. Jacobus.—It is recommended in the paper that the efficiency of a boiler be made the basis of comparison. If this is done the exact method of calculating the efficiency should be specified, as there may be a considerable variation depending on the way the result is arrived at.

There may be a difference of opinion in regard to what allowance, if any, should be made for the moisture produced by the hydrogen in the coal and for the hydroscopic moisture in the coal. If the coal contains, say, five per cent. of hydrogen, we will have about 45 per cent. of moisture due to its presence escaping up the chimney, and the latent heat in this moisture is not available. Now, the query is, Should we deduct the latent heat of such moisture in calculating the total heat used in determining the efficiency, or should we include it? If we include it we must use the calorific power which is given by the Mahler, or other, calorimeters, where such moisture in the products of combustion is condensed in the calorimeter or allowed for by calculation; whereas, if we deduct it, the query is, How are we going to make the proper allowance?

It appears to me that the proper way to do would be to take the total heat of the coal, including all the heat which is latent in the water vapor, and then deduct the heat which goes up the stack in the form of latent heat and in the form of specific heat, in both the hydroscopic moisture and that produced by the hydrogen, because if this is not done a coal of a given calorific power would be more favorable to the boiler if it contained very little hydrogen than it would if it contained a large amount of hydrogen.

This question has already come up in practical tests, in which there was a guarantee of efficiency, and there was a difference of several thousands of dollars according to which way the efficiency was calculated. If the efficiency standard is recommended, there-

Digitized by Google

fore, all such questions should be carefully weighed, and specific instructions should be given so that there could be no question raised in regard to the method of computation.

The heating power obtained from a calorimeter which is perfect in its action would be more exact than that calculated from the analysis of the coal, because in calculating the heating power from the analysis the heat of combustion of some of the elements depends on the way in which they are combined in the coal. The only way to find out the heating power is to make exact experiments with a calorimeter on the grades of coal in question, after which a formula might be made for calculating results from the analysis, which would agree with the experimental results. In commercial work it would be well to make an analysis, and check the ordinary calorimeter results by calculating the heating power by means of such a formula. An analysis of the coal is also necessary in determining the latent heat of the vapor in the products of combustion.

It would be unwise to change the standard of the boiler horse-power from 34½ to 35, as is recommended in the paper, because there is now a number of tests in which the horse-power is calculated on the 34½ basis, and if such a change were made it would produce a needless confusion.

Furthermore, the efficiency per pound of coal, and not the efficiency per pound of combustible, should be used if we wish to obtain what might be called the commercial efficiency of a boiler; for the reason that, if we calculate the efficiency per pound of coal, we bring in the efficiency, or inefficiency, of the grate, and the efficiency of the grate is as much a factor from an economical standpoint as the efficiency of the boiler itself. The efficiency per pound of combustible represents the efficiency of the boiler as an absorber of heat, if proper allowance is made for the difference in the calorific power of the combustible which is burned and that which falls through the grate—and does not include the efficiency of the grate.

Mr. Wm. H. Bryan.—I quite agree with Mr. Dean that the Society should establish certain standard coals—say, four or five well-known types—selecting the highest grade known in each section of the country.

We should also reach a more definite understanding as to the moisture. I do not favor drying on the smoke flue, as that may drive off some of the characteristic moisture; we want to get rid

Digitized by Google

of only the "accidental" moisture, and that can be done by simple air drying.

It seems to me, also, that we should discontinue the use of the term "combustible," which is now worse than misleading. Conservative engineers have long since ceased to place any particular value upon results so stated. The Society should give its sanction to the statement of boiler performance in percentage of "Efficiency," which plan is now coming into such wide adoption. Here I must differ from Mr. Dean, as I should again discard the term "combustible," and compare the heat usefully absorbed from one pound of coal with the heat value of a pound of the same coal. Let us abandon the term "combustible" altogether. It is as misleading here as elsewhere.

It must be remembered, however, that the term "efficiency" does not tell the whole story, for the same boiler under identical conditions will vary in efficiency, depending upon the character of the coal used. As a rule, the efficiency will decrease with the amount of fixed carbon shown by the analysis. This, as already stated, makes it necessary to establish certain standard coals for different parts of the country. The computing of efficiency necessitates, of course, the determining of the heat value of the coal in every case. Personally, I prefer an experimental determination by calorimeter, the coal having been previously carefully sampled. I cannot agree with Mr. Barrus, however, that this should be done by the engineer on the ground. It is more strictly the work of a chemist, and can be done much better in the laboratory. I see no reason why we should not place as much dependence on the work of a skilled chemist as we do on that of any assistant on the work. Samples should, of course, be well cared for, and delivered to the chemist with the least possible delay.

I am not ready to endorse Mr. Dean's suggestion that the commercial horse-power unit be changed from 34½ to 35 pounds water from and at 212 degrees per hour. The first-named figure has now become well established and generally accepted. If any change is made, let it be in the direction of a considerable lowering of the unit, in order to harmonize with the reduced water rates now common among improved types of engines, which are now coming into such general use.

I am heartily in favor of an immediate revision of the Society's code and form of reporting boiler tests. So far as possible, the members of the Society's committee of 1886 should serve, together

Digitized by Google

with a liberal sprinkling of engineers from other parts of the country. I take pleasure, therefore, in seconding Mr. Dean's resolution.

Prof. R. C. Carpenter.—The general proposition made by Mr. Dean, that a revision of the standard method of testing boilers is required, may, no doubt, be true. It is a fact, I think, that most testing engineers have, for some time, been in the habit of determining the efficiency of the boiler by methods similar to that suggested by Mr. Dean, except that the computation is to be made by coal burned rather than combustible. At least this has been the practice with us, and I submit a form of blank for reporting tests, which we have used for some years, and which differs from the standard form principally in addition of blanks for efficiency.

In Mr. Dean's remarks regarding the method of determining the fuel value of coal, he, in my opinion, attributes too much value to the analysis. It is quite true that the fuel value of a coal may be calculated very accurately if a complete chemical analysis, giving all the constituents of the volatile matter, is made; but I think, on the other hand, that the ordinary approximate analysis, which simply shows the relative amounts of fixed carbon, of volatile matter, ash, and sulphur, is of no value for determinations of this sort. The writer has given a paper, to be read later at the session, which gives a large number of proximate analyses of coals in such form as may be readily compared with the heating values. By a study of that table it will be seen that for the anthracite coals the heating value is nearly proportioned to the fixed carbon, but for the bituminous coals the writer can determine no relation between the heat value and the elements, as determined by proximate analysis. The reason for this is due entirely to the varying composition of the volatile matter in various coals. This, in some cases, is largely hydrocarbon, and more valuable than fixed carbon; in others it contains a large amount of nitrogen and oxygen, and is of no value whatever for fuel purposes.

A complete chemical analysis, giving the composition of the volatile matter, is a difficult and expensive one to make, and almost outside the province of the engineer; for this reason the writer thinks a calorimetric determination will in every case need to be made, although much information of value is to be obtained, in every case, from the proximate analysis.

A determination of the composition of the escaping gas, provided the samples are well selected, will prove of very much value

Digitized by Google

in providing information regarding the operation of the furnace and the work of the fireman. It affords, so far as the writer knows, the only means of judging the work of the fireman, in such a manner that it can be compared with a definite or numerical standard.

MECHANICAL LABORATORY—SIBLEY COLLEGE.

REPORT OF BOILER TEST.

Made by.....

.....N. Y.,.....189..

Kind of boiler..... Manufactured by.....

Duration of trial.....	hours.
Dimensions.	
Grate surface, length.....ft., width.....ft.....	sq. ft.
Water-heating surface.....	sq. ft.
Superheating surface.....	sq. ft.
Area for draught (calorimeter).....	sq. ft.
Area, chimney.....	sq. ft.
Height, chimney.....	ft.
Ratio heating to grate surface	
Ratio air space to grate surface.....	
Pressure.	
Barometer.	In. mer.
Steam gauge.....	lbs.
Draught gauge.....	In. wat'r
Absolute steam pressure.....	lbs.
Temperature.	
External air.....	deg. F.
Boiler room.....	deg. F.
Flue.....	deg. F.
Furnace.....	deg. F.
Feed water.....	deg. F.
Steam.....	deg. F.
Fuel.	
Total coal consumed.....	lbs.
Moisture in coal.....	per cent.
Dry coal consumed.....	lbs.
Total refuse, dry.....	lbs.
Total refuse, dry.....	per cent.
Total combustible.....	lbs.

Digitized by Google

Fuel, per Hour.

Dry coal, per hour	lbs.
Combustible, per hour	lbs.
Dry coal, per square foot of grate	lbs.
Combustible, per square foot of grate	lbs.
Dry coal, per " " "	He't sur.
Combustible " " "	" "
Quality of steam	per cent.
Superheat	deg.

Total Water.

Total weight water used	lbs.
(by meter)	cu. ft.
Total evaporated, dry steam	lbs.
Factor of evaporation	
Total from and at 212 degrees	lbs.

Water, per Hour.

Amount used	lbs.
Evaporated, dry steam	lbs.
Evaporated from and at 212 degrees	lbs.

Evaporation.

Actual, per pound of fuel	lbs.
Equivalent from and at 212 degrees, per pound of fuel	lbs.
Actual, per pound of combustible	lbs.
Equivalent from and at 212 degrees, per pound of combustible	lbs.
Actual, per square foot heating surface per hour	lbs.
Equivalent from and at 212 degrees, per square foot heating surface per hour	lbs.

Evaporation, per hour.

Actual, from feed-water temperature, per square foot of grate	lbs.
Equivalent from and at 212 degrees, per square foot of grate	lbs.
Actual, per square foot of water heating surface	lbs.
Equivalent from and at 212 degrees, per square foot of water heating surface	lbs.
Actual, per square foot of least draught area	lbs.
Equivalent from and at 212 degrees, per square foot of least draught area	lbs.

NOTE.—Actual evaporation signifies the evaporation from feed-water temperature to dry steam at gauge pressure. It is apparent evaporation corrected for calorimeter determination.

Digitized by Google

	Horse-power.
* On basis 34½ pounds equivalent evaporation, per hour...	H. P.
Builders' rating.....	H. P.
Ratio of commercial to builders' rating.....	
Heat generated per hour.....	B. T. U.
Heat absorbed per hour.....	B. T. U.
Efficiency of boiler.....	per cent.
Efficiency of furnace.....	per cent.

I need only refer to one thing further, and that is to say in regard to the change of the standard form of reports that it seems to me the remarks made by Mr. Dean are very good, but I think it would be a great mistake to change our standard of boiler horse-power, because it has become so very well fixed and been so universally adopted. The addition of certain results which would show the efficiency of the boiler is, it seems to me, a very desirable thing, and is now often practised.

Mr. George I. Rockwood.—The figure of chief interest in the report of a boiler test used to be the ratio of water evaporated to coal burned. Later it was seen that serious injustice might be occasioned if *comparisons* of the economy of different boilers, located in different sections of the country, were made on such a simple basis by reason of the variable quantity of ash and moisture which different coals contain; and the committee of the Society has advised consequently that in all boiler tests which were reported to the Society the ratio of evaporation to combustible burned should be given, in order that proper comparative values of different boilers might be made. Since the committee's rules were presented to the Society, so much light has been thrown, as a result, on the subject of comparative values of different elements in the complete boiler that it is now realized that the evaporation per pound of combustible is a very difficult matter to determine correctly, complicated as it is by questions as to the amount of moisture, ash, oxygen, efficiency of furnace, etc., and Mr. Dean's paper is timely in concentrating attention on the deficiencies of the rules.

At the same time, all this seems to me to but emphasize the futility, instead of the advisability, of including in a written contract a guarantee of "efficiency" as defined by Mr. Dean, or a clause stating that the committee's rules are to be followed by purchasers in determining the efficiency.

* Standard commercial H. P.

Digitized by Google

Reports to this Society on the performance of boilers are one thing and have one purpose—namely, the instruction of its members in the science of boiler construction and operation—while a report to a works manager is quite a different thing, having for its object simply to inform the manager as to whether a contract has been performed or not, or, at most, to inform him as to which class of fuel is the least expensive for him to buy. He buys fuel, not heat. Fuel can be weighed, but heat can only be measured correctly by means of the most delicate and complicated laboratory experiments, even if, by good luck, a sample of the coal be secured for laboratory treatment which fairly represents the coal which was burned during the tests.

I am not suggesting that Mr. Dean's definition of "efficiency" is inaccurate or, in its conception, unfair to the purchaser or seller of boilers; but the point I would urge is that in most contract tests the difficulty of attaining reasonable accuracy in determining the heat efficiency of a boiler or a furnace is insuperable, and hence the practice of trying to find it may lead to quackery and the spread of misinformation. Therefore, the thing for this Society's committee to do, it seems to me, in view of the meaninglessness of the ratio per pound of *combustible*, is to advise, for general contract tests, a return to the original simplicity of weighing the water and the coal—and the moisture in the steam, *if you can!*

Let the Society recognize that contract tests must be based, not on ideal intellectual condition and methods, but on the practical limitations surrounding the average boiler test. A reform in this matter would indeed be worked if guarantees were to be based on the evaporative effect of a pound of that particular kind of fuel which the purchaser has got to use, for the use of which the furnace is designed, and which the seller has the right and the duty to examine before a contract is drawn.

Mr. Robert W. Hunt.—Mr. Dean has called attention to several points which are most important, and which clearly need remedying. It seems as if a boiler could be guaranteed to give any desired efficiency, and if not obtained on the test a compromise will be made and the test suppressed; but the fact that the guarantee was made is used for advertising purposes, much to the discomfiture of the more honorable boiler-maker.

During the past three years Robert W. Hunt & Co. have been called upon to make a great many boiler tests, especially to

Digitized by Google

determine whether or not some patent smokeless furnace, or patent setting, fulfilled the guarantee under which it was attached to the boilers. Nearly all the prominent devices have been tested by us, and a comparison of the results gives us data which are very interesting.

It is true that our tests have not had as fine a theoretical polish as some, but accuracy has been observed to the highest degree, and we have tried to make them under as nearly ordinary working conditions as possible. Of what use is a boiler to a manufacturer, if it can develop 75 per cent. efficiency from combustible, when he runs it in such a way as to obtain only 50 per cent.? He cannot buy combustible, but has to pay for coal, ash, moisture, and sulphur.

The theoretical "combustible" as obtained from the analysis is of no value to him when his grates will allow 20 per cent. of the fuel to pass through. This would give a high evaporation per pound of combustible, but the cost of making steam would not be lowered. Combustible is an extremely elastic term and a dangerous one.

The real and fundamental object of all boilers, leaving out safety and adaptability for particular use, is to generate steam as cheaply as possible. All other observations and readings are valuable to the student and designer, but the owner's question, and one which we hear almost daily, is, "How can I generate my steam for the least money?"

As Mr. Dean states, on many noted boiler trials it will be found that the very best picked coal was used. Allowing an evaporation of 12 pounds from and at 212 degrees, and that the coal costs $4.00 per ton, or $4.80 per ton delivered and placed under the boiler, the cost of evaporating 1,000 pounds of water from and at 212 degrees is 20 cents, and an efficiency of probably about 75 per cent. has been obtained. In another case, within a few miles of the former, Illinois slack is delivered under the boilers at $1.40 per ton, and with a horizontal tubular boiler equipped with a down-draft furnace an evaporation of 8.5 pounds of water from and at 212 degrees is a regular occurrence. This gives a cost of evaporating 1,000 pounds of water from and at 212 degrees of $.08\frac{8}{10}$ cents. The cost of generating steam is low, so also is the efficiency; but the owner prefers to have his coal bills reduced even if efficiency does suffer.

I agree most heartily with Mr. Dean that a committee of this

Digitized by Google

Society should be appointed to revise the rules for boiler tests, and I trust, if such committee is appointed, that they will outline an alternative method for starting and stopping tests. Our experience has been that much more accurate results can be obtained by a running start than by pulling all the fire. When the fire is pulled, the brick work and boiler itself are cooled very considerably, and the heat first generated is, of course, used to make up this loss. At the end of a test the coal must all be consumed, or we must rely on the engineer to separate the coal and the ash. In the former case we have seen a test run for half an hour after coal was consumed, and mostly from the heated brick work, the engineer closing up all dampers and allowing no one to open the doors. This was clearly wrong. In the latter case the dumpings must be wet to distinguish coal from refuse. There are ways and methods for conducting a boiler test which reduce to a minimum any chance of error by the honest engineer and, as much as possible, any intentional fraud.

The results of a test should be so worded that an owner can understand them and appreciate fully of what vital importance it is to his interests to have tests made frequently and with different grades of fuel; always with the view of generating steam for the least money, and not merely seeking to obtain the highest efficiency.

Mr. Jos. C. Platt.—I want to thoroughly endorse Mr. Dean's recommendation, because I believe that we have had so many tests made which do not get at the true facts which the generators of steam want. I cannot agree with Mr. Rockwood and with my friend Captain Hunt altogether, because I think if a manufacturer, a man who is generating steam, knows that he can get a high efficiency out of any fuel, he can apply that knowledge to the fuel he uses afterwards.

I heard last Friday of a boiler in which the evaporation was *said to be* over 13 pounds and the efficiency over 91, but I do not take a great deal of stock in that for regular running. I know of a contract which is now pending in which the efficiency required is 72 per cent. One of the best-known boiler-makers in the country said to me that he had serious doubts as to any boiler holding up to 72 per cent. for any great length of time. I heard this week of a boiler test in which for the first six hours there was from 600 to 650 pounds of coal used per hour; the last eighteen hours of the test there was about 850 pounds of coal

Digitized by Google

used per hour. The work of the engine was quite uniform. Now, I submit to any man whether the first six or the last eighteen hours were, either one of them, a fair running test of that boiler. Take, by contrast, a reported test of factory engines in Belfast. They ran a three-hour test. The steam consumption was remarkably low. By contrast with that think of the Louisville test of the pumping engine, one hundred and forty-four hours and ten minutes, and of a week's test now going on in this city. An evaporative test was made last year at a place where I recommended a change in fuel. For twenty-four hours this test was continued, running a small pumping engine, and, after the evaporative test was over, the coal in the fire ran that engine for five hours. I would like to know what duty they got from that engine in those last five hours; was it not something like infinity? I say this to emphasize one thought—that the committee ought to specify the time these tests ought to run. A test for three hours is not a fair thing. Perhaps one hundred and forty-four hours is longer than is necessary. Making a boiler test for twenty-four hours I do not think is fair either. I know of boilers which will run admirably for twenty-four hours, but I do not think they would run particularly well on the last day of the week compared with the first. I think whatever committee we appoint —and I endorse the suggestion that the other committee ought to be reappointed as far as possible—ought to fix a reasonably long time for this sort of tests.

Prof. W. B. Potter.—Mr. Dean has done well in calling attention to the imperfections in the American Society of Mechanical Engineers' Standard Code of reporting boiler trials and in asking for a revision of the same. This code has been especially valuable in leading engineers to adopt a more uniform and complete method of testing boilers and reporting the results, and in this way has done admirable service. It is, however, at this date, crude and imperfect in some particulars, and not only leaves room for too great a variation in application, but has evidently been the means of misleading many and of developing erroneous ideas concerning matters of fundamental importance. Mr. Dean has called attention to some of these, but I cannot agree with his conclusions concerning them, and, having been asked to express my views, I venture upon a few remarks upon some of the points presented in his paper.

Mr. Dean says very truly: "Results may be vitiated for com-

Digitized by Google

parison by drying samples of coal for moisture allowance, different lengths of time." His recommendation in order to do away with this difficulty is, however, one which I trust will not be adopted. It is not only quite inadequate, but is misleading in that it introduces new complications.

Coal, especially bituminous coal, such as is generally used under boilers, has two classes of moisture: First, what might be called characteristic moisture, which is practically constant for the same coal *in its air-dried condition.* In some coals this is not over one per cent.; others have as high as six or eight per cent., while coals of more lignitic type, such as are common in the far West, have ten, fifteen, and even eighteen or twenty per cent. No matter how long the coal is subjected to air-drying, each coal retains its characteristic moisture to a practically constant degree. Second, there is, in addition to this, the moisture that the coal receives from exposure to rain, snow, mine water, or from the hose used to wet down the coal in order to keep down the dust when the coal is thrown into the boiler-room. This moisture may be called *accidental* moisture, and is as variable in amount as the characteristic moisture is constant. If we were to follow Mr. Dean's recommendation of drying "a well-selected sample, weighing six or eight pounds, six hours in a clean pan placed on the boiler flue," what are likely to be the results as regards these classes of moisture and other components of the coal? In the first place, what is the temperature of the boiler-flue on which the sample is to be placed? It may be 350 degrees Fahr., or it may be 750 degrees or even more at times, while 500 to 600 degrees will probably prevail much of the time. Whatever the condition of the sample, whether broken fine or in lumps, the coal will certainly lose all of the *accidental* moisture in the six hours' exposure on the flue, and most, if not all, of its *characteristic* moisture would still be retained, while in the case of the fine coal, which would be more exposed to the high temperature, a notable portion of the volatile matter would be driven off. But after this so-called drying, what does the sample of coal represent? It surely does not represent the coal actually used for firing the boiler during the test, nor does it represent any normal or characteristic condition of the coal.

If it is really desirable to dry a sample of the coal in order to determine its total moisture, why not perform the operation in such a way as to obtain an approximately reliable result? For

Digitized by Google

instance, after first weighing the coal, crush, pass through a No. 10 screen, and expose in portable air-chamber with thermometer, to guide in the control of temperature, which latter should not be over 220 degrees Fahr. Even with this care the determination of moisture allowance could only be approximately correct, for it is obvious that the comparatively small sample, however taken, would be much exposed to air-drying and lose a notable, but undetermined, quantity of its *accidental* moisture by the time the sample was secured and made ready for the first weighing. The coal actually used under the boiler, on the other hand, is shovelled directly into the fire from the large pile where there is little chance for any air-drying. It must be evident, therefore, that even with the best intentions and most careful method of determining the total moisture in the coal it is impossible to get more than a rough approximation to it. But, after all, what value does it really have when obtained? It is only used for correcting the weight of coal employed in the test to dry weights, and no attempt is made to correct for the heat absorbed in vaporizing this water which has been shovelled into the fireplace with the coal. The whole thing is illogical and useless, and, worse than this, it is misleading. The practice that I have long followed is to employ air-dried coal for the test—that is, coal freed from its *accidental* moisture, but leaving its characteristic moisture unimpaired. With a little care this is easily arranged, and all such useless and misleading corrections so called, as referred to above, are done away with. The sample of coal analyzed and tested by calorimeter fairly represents the coal that has been used under the boiler, and data are obtained, so far as the coal is concerned, by which fair comparisons can be made. If, then, in revising the code, the committee would require that air-dried coal be used for the boiler test, instead of corrections for dry coal, the case would be simplified, and more reliable results would be obtained in the way of data of boiler tests.

This leads me to make another suggestion in reference to the coal for boiler tests. Certain coals should be selected in the various districts and named as standard coals to be used in those districts for all tests where the merits of the boiler are to be determined. It is not necessary, nor would it be practicable, to have the standard coals of similar characteristics or equal calorific value. It would only be necessary to select a coal for each district that was of reasonably good quality, provided it showed

Digitized by Google

but little variation in quality. With such a series of standard coals, results of boiler tests could be more readily compared within each district, and data could soon be obtained by which results of tests in one district could safely be compared with those in other districts.

It is curious to see what a prejudice remains in the minds of engineers in favor of that ancient fraud, the pound of combustible. Mr. Dean in his paper urges that the efficiency of boilers be based on the combustible, in order to secure a more reliable estimate and comparison of the merits of boilers. There is nothing to indicate that his idea of combustible differs from that of other engineers who are apparently so wedded to it; namely, the weight of any coal after deducting the weight of ash. As a matter of fact, this is by no means all combustible, nor does it indicate with any degree of accuracy the true amount of combustible. All coals, especially of the bituminous class, contain considerable oxygen, which varies greatly in amount in different coals. In the decomposition of the coal when heated, this oxygen takes one-eighth of its weight of the hydrogen and together they go off as water (called combined water), heat being absorbed in its vaporization. The pound of combustible takes no account of this, except that it fraudulently assumes it as a part of itself. Besides this there is much that is misleading in the use of data referring to the pound of combustible. It is difficult to see how accuracy, convenience, or any useful purpose can be promoted by the use of such a misleading factor, and it is greatly to be hoped that revision of the code will result in the final and effectual removal of the pound of combustible.

Mr. D. L. Barnes.—I am familiar with a large number of tests which have been made within a year, at a certain railroad headquarters, with coal fuels, and this particular railroad has established the fact beyond dispute, so far as that road is concerned, that there is absolutely no *certain* connection between a chemical or a combustion calorimeter test of a fuel and its practical operation if the fuel is impure. The mechanical properties of fuel must be considered; and whatever this committee does, if it is a practical thing so that it may be useful not only to the buyer but to the builder of boilers, it must take into consideration that there is something besides the gross combustible per ton to be considered. Most railroads in the West use a great variety of fuels—not uniform fuel as is generally found on Eastern roads.

Digitized by Google

Some of those fuels contain twenty per cent. of ash, and twelve per cent. of moisture. Now, the presence of this great amount of foreign matter renders it impossible to get always practical measures of the quality from a chemical analysis or a combustion calorimeter. I want to endorse all that Professor Jacobus and Professor Denton have said, and I hope that the committee will give us a standard way of testing fuels that have peculiar properties.

Mr. Gustavus C. Henning.—It seems to me that the reappointment of this committee or the appointment of a new committee is a very timely suggestion; and in order to cover the ground more thoroughly this committee could also include the use of gases and liquid fuel in their consideration, and in their recommendation of a standard form make it so that that can be covered, which is not now the case; it will not occasion much difficulty to change it to suit conditions of different fuels.

Mr. William Kent.—I believe that I am the only member of the original committee present. Mr. Hoadley died some years ago, and Professor Thurston, Mr. Emery, and Mr. Porter, the other members of the committee, are not present. It seems to be the unanimous feeling that the work done by that committee ten years ago should be revised, and I, as a member of that committee, offer no objection to the proposed revision. Probably most of the men who have discussed this report have little idea of the labor undertaken by that committee ten years ago, and what a difficult time we had to reach any agreement. Some of the suggestions made in Mr. Dean's paper commending that report are the same suggestions I myself made before the report was adopted. I think if you appoint a committee now it would be a still harder job. At that time there were not so many technical experts in testing boilers, and we had to take the opinions of about 30 or 40 experts. I think now we would have 300 or 400 different opinions, and I think it would be a difficult matter to bring them together. But I agree with the gentlemen who have spoken, that ten years having elapsed there should be a revision of the report, and I make no objection whatever to the suggestion of Mr. Dean as to having the report reconsidered.

Mr. J. F. Holloway.—I think it is the province of any committee which the Society may originate to obtain the facts relevant to subjects that may be given to them for investigation. It is the province of the Society, having obtained those facts, to decide

Digitized by Google

whether to adopt what is reported or not. The resolution should not indicate that the committee be authorized to change the standard. I think that ought not to be done.

Mr. E. D. Meier.—I would like, if the mover would accept it, to make the number of the committee nine. I believe there are four members of the continued committee, and if we make the number nine it would give an opportunity to put in five more members representing the different districts of the country.

Mr. A. A. Hunting.—I would offer as a suggestion: Instead of pounds of water evaporated per pound of coal consumed, read pounds of water evaporated per x number of heat units, the number of heat units to be determined by calorimeter test of a pound of coal which may be selected as a standard. Then by calorimeter all coal can be tested, using the x number of heat units as a value of any coal for the purpose of generating steam. Then the consumer can ask for a guarantee that coal shall contain x number of heat units for one dollar, that the boiler shall evaporate y number pounds of water per x number of heat units, and thus place a definite value on both coal and boiler as far as they relate to evaporation.

The President.—The question has been called for. Mr. Henning, will you present the amended motion?

Mr. Henning.—It is, "*Resolved*, That the Council of the American Society of Mechanical Engineers be requested to appoint a committee of nine members of the Society to consider the standard method (of 1886) for conducting steam-boiler trials, reported to the Society by a committee at that time; and if in the judgment of that committee a revision of that standard would be desirable, that such committee report its recommendations to the Society."

The resolution was adopted.

[The Council subsequently appointed as such committee, Messrs. Barrus, Coon, Dean, Emery, Hunt, Kent, Porter, Potter, and Thurston.—*Secretary.*]

Digitized by Google

DCLI.*

FORCE REQUIRED AND WORK PERFORMED IN DRIVING AND PULLING CUT AND WIRE NAILS.

BY R. C. CARPENTER, ITHACA, N. Y.

(Member of the Society.)

THE following series of experiments shows not only the force required to drive and start the nails, but also the relative work in each case. Some other properties are also brought out, which it seems to the writer are of importance, but which do not seem to have been generally considered in other tests.

To obtain some figures which would give not only the maximum force, but also the work required both for driving and pulling various nails, the writer had the following experiments conducted in the laboratory of Sibley College.† Nails of various kinds were forced into a piece of southern pine, which was as nearly homogeneous as was possible to obtain, by one of the heads of a testing machine, and the amount required at the end of each one-quarter inch of penetration was noted. The nails were driven within about one-quarter inch of their full length in each case.

In pulling, they were drawn out by a species of forceps attached to the testing machine, the force required being noted at each one-quarter inch. Diagrams were then drawn, corresponding to the force exerted and the depth of penetration, the integration of these diagrams giving the total work either for driving or for drawing. (Figs. 277–281.) Experiments were made on ten nails of each kind, and the averages taken to represent the work of any particular class.

The general summary of the experiments is given in the following table, from which it will be noted: First, that very much more force is required to drive a cut nail a given distance than

* Presented at the Detroit meeting (June, 1895) of the American Society of Mechanical Engineers, and forming part of Volume XVI. of the *Transactions*.

† The experiments were made by W. E. Barnes and R. O. Stillwell, to whom I am indebted for much help in reducing the results.

Digitized by Google

a wire nail. Second, that more force is required to start a cut nail generally than to drive it, and that it invariably starts much harder than a wire nail. Third, the work in *inch-pounds* per nail required in driving cut nails is much more than that in driving wire nails. Fourth, the work in *inch-pounds* in pulling cut nails is about equal, sometimes less and sometimes greater, per nail, than that for pulling wire nails. Fifth, the maximum force per pound in driving or starting wire nails is more nearly equal to that of the cut nails than when estimated on the basis of that of a single nail, but it is still less. Sixth, the work, in *foot-pounds*, per pound of wire nails, required for driving is less than that required for the cut nail, and that for pulling is considerably more. Seventh, the relative efficiency, which is here considered as the ratio of the work of pulling to that of driving, is much higher for the wire nail than for the cut nail.

In making experiments it was noticed that the cut nail bruised and broke the fibres of the wood, principally at the end of the nail, whereas the wire nail simply crowded them apart, and probably did not move them much beyond the point from which they would return by elastic force, and hence the nail would be grasped much stronger per unit of area of surface by the wood. Presenting less surface, there would be, however, less resistance to starting.

To see what the effect of change of form would be, a number of tenpenny cut nails were sharpened on the point by grinding to an angle of about thirty degrees, so that the fibres in advance of the nail would be thrust aside, and not bruised and broken. This served to increase the holding power, as will be seen by the experiment, over the cut nail of ordinary shape, about fifty per cent. in starting force, and about thirty per cent. in work of resistance to pulling.

Digitized by Google

SUMMARY OF EXPERIMENTS IN DRIVING AND PULLING NAILS IN SOUTHERN PINE WOOD.

No. of nail.	Kind of nail.	Number to one pound.	Depth of penetration, inches.	Maximum load to drive, pounds.	Max. load to start in pulling, pounds.	WORK PER NAIL IN INCH-POUNDS.		MAXIMUM WEIGHT REQUIRED PER POUND OF NAILS, IN TONS.		WORK IN FOOT-POUNDS REQUIRED PER POUND OF NAILS.		Relative efficiency.
						To drive.	To pull.	To drive.	To start.	To drive.	To pull.	
20*d*	Cut.....	23	3¼	819.6	920.8	1,522.85	477.6	9.37	11.6	2,915	915	31.6
20*d*	Wire.....	34	3¼	376	318	864.6	472.8	6.41	5.42	2,450	1,335	54.5
10*d*	Cut.....	70	3	341.6	356.8	585.25	200.85	11.9	12.5	2,410	1,215	35.5
10*d*	Wire.....	105	3	232.4	213.6	435.65	220.2	12.2	11.4	3,830	1,940	50.7
10*d*	Cut..... (Sharpen'd)	.....	3	483	518	699.75	284.7	.....	.....	.....	.....	41.0
8*d*	Cut.....	88	2½	312.4	328.4	419.1	140.1	13.7	14.5	3,088	1,019	33.5
8*d*	Wire.....	132	2½	198.8	167.2	278.6	104.6	13.2	11.1	3,340	1,255	37.5
6*d*	Cut.....	168	1¾	221.2	155.6	274.3	64.5	18.7	13.3	3,880	904.5	23.5
6*d*	Wire.....	252	1¾	134.6	87.6	165.2	62.75	16.9	15.0	3,480	1,330	38.0

The good result produced in sharpening the end is shown by some experiments made some years ago in the Sibley laboratories on the holding power of ordinary railroad spikes, as compared with a Walcott spike, which differed from the ordinary railroad spike in having a sharp end and also in having two longitudinal grooves stamped into one side.

RESISTANCE TO PULLING WHEN DRIVEN FIVE INCHES IN DEPTH.

	In White Oak.	In Hemlock.
Standard Spike No. 1	6,160	3,200
" " " 2	5,500	3,210
Average	5,330	3,205
Walcott Spike No. 1	7,120	3,960
" " " 2	6,890	3,700
Average	7,005	3,830
Excess required for Walcott Spike, pounds	1,175	625
" per cent	20	19.5
DIMENSIONS OF SPIKES.	Walcott.	Standard.
Weight, pounds	0.665	0.659
Periphery,* inches	2.39	2.41
Length, inches	6.00	5.57

* In measuring the periphery of the Walcott spike the two longitudinal grooves are included.

The following tables give the results in detail of the experiments referred to as made by Barnes and Stillwell:

Digitized by Google

WEIGHT REQUIRED, IN POUNDS, TO DRIVE 20-PENNY CUT NAILS FOR EACH QUARTER INCH OF LENGTH.

	DEPTH IN INCHES.													
	¼	¼-½	½-¾	¾-1	1-1¼	1¼-1½	1½-1¾	1¾-2	2-2¼	2¼-2½	2½-2¾	2¾-3	3-3¼	3¼-3½
1	44	140	260	260	260	270	300	328	380	420	488	540	620	620
2	80	188	288	292	296	296	360	500	512	628	692	708	744	872
3	84	164	200	260	360	368	368	440	516	572	620	688	752	800
4	66	180	240	272	304	344	372	430	504	560	650	696	748	796
5	52	182	232	278	324	354	396	448	524	588	642	704	764	824
6	48	160	224	264	312	324	382	466	508	608	682	692	752	812
7	64	172	286	296	300	312	372	424	496	592	664	684	724	784
8	44	162	264	262	292	340	388	404	520	564	688	700	716	764
9	60	196	200	208	296	320	392	416	500	584	692	712	724	792
10	42	184	192	202	284	360	382	424	504	524	624	692	712	892
	58.6	173.8	238.6	259.4	302.8	328.8	371.2	428	496.4	564	644.2	681.6	724.6	819.6

WEIGHT REQUIRED, IN POUNDS, TO PULL 20-PENNY CUT NAILS EACH QUARTER INCH IN DEPTH.

	DEPTH IN INCHES.													
*	¼	½	¾	1	1¼	1½	1¾	2	2¼	2½	2¾	3	3¼	3½	3¾
1	0	0	0	4	6	16	28	44	64	104	124	200	248	342	824
2	0	0	0	6	8	16	24	40	44	64	88	124	180	308	1,000
3	0	0	0	4	6	12	20	32	56	72	108	152	224	272	984
4	0	0	0	6	10	14	22	38	52	96	116	180	232	296	888
5	0	0	0	2	12	16	28	32	66	88	124	164	256	272	956
6	0	0	0	6	6	12	24	36	60	92	142	184	216	300	908
7	0	0	0	4	10	14	28	32	64	108	132	172	204	292	896
8	0	0	0	2	2	8	16	22	38	52	124	176	196	228	832
9	0	0	0	4	12	18	24	36	58	140	184	192	232	296	896
10	0	0	0	2	6	16	32	36	52	104	124	182	216	272	1,024
	0	0	0	4	8	15.2	24.6	34.8	55.4	92	126.6	172.6	219.8	287.8	920.8

* Mean force for each quarter inch:

0	0	0	2	6.0	11.6	19.9	29.7	45.1	88.2	109	150	201	254	355

Inch-pounds of work required:

0	0	0	0.5	1.5	2.9	5.0	7.4	11.3	20.8	27.2	37.5	50.2	64.5	88.7

Total work in inch-pounds by diagram, 477.6.

WEIGHT REQUIRED FOR EACH ONE-QUARTER INCH IN DEPTH TO DRIVE 20-PENNY WIRE NAILS.

	DEPTH IN INCHES.													
	0-¼	¼-½	½-¾	¾-1	1-1¼	1¼-1½	1½-1¾	1¾-2	2-2¼	2¼-2½	2½-2¾	2¾-3	3-3¼	3¼-3½	3½-3¾
1	132	160	172	160	196	212	220	252	280	296	320	324	340	344	
2	100	136	160	172	180	200	224	240	264	300	308	340	356	366	
3	88	136	168	184	196	208	232	264	296	308	324	340	356	360	
4	96	144	162	192	196	216	232	272	284	304	320	336	360	372	
5	92	132	152	184	192	208	232	264	292	308	324	330	344	368	
6	84	112	164	196	200	204	216	252	300	304	332	348	366	396	
7	72	104	152	182	192	200	224	248	296	316	336	360	364	396	
8	80	100	166	188	192	192	220	240	256	304	322	354	362	384	
9	104	124	144	192	208	212	228	236	256	324	342	366	384	396	
10	96	116	140	184	224	232	242	262	284	316	336	348	364	388	
	94.4	126.4	158	185.4	197.6	208.4	229	263	280.8	308	326.2	345.5	359.6	376	

Digitized by Google

FORCE IN POUNDS REQUIRED IN PULLING 20-PENNY WIRE NAILS.

*	DEPTH IN INCHES.														
	¼	½	¾	1	1¼	1½	1¾	2	2¼	2½	2¾	3	3¼	3½	3¾
1	0	0	4	16	24	40	56	56	68	96	108	128	136	168	250
2	0	0	2	12	20	28	44	56	64	80	116	124	144	210	240
3	0	4	14	20	32	44	64	76	88	124	148	164	180	200	348
4	0	2	12	16	28	42	60	78	96	112	140	184	204	216	308
5	0	0	8	12	24	40	52	68	82	104	124	172	200	204	292
6	0	0	12	16	30	44	56	62	96	100	134	180	196	212	300
7	0	0	6	12	24	48	54	72	92	124	132	150	208	224	284
8	0	0	12	16	30	44	56	62	96	100	136	180	196	212	300
9	0	0	12	20	24	56	64	78	102	116	140	148	192	220	272
10	0	0	8	16	32	52	76	88	96	128	144	156	184	232	280
11	0	0	4	12	24	56	82	96	106	124	152	188	208	224	296
Av.	0	.6	9.4	16.8	29.2	49.4	66.6	79.2	96.8	120.8	137.4	167.4	204.8	212.2	318
*	0	0	7.7	13.1	23.0	39.3	58	72.9	88.0	108.8	129.1	152.4	186.1	213.5	260.1
	0	0	1.92	3.3	5.7	9.8	14.5	18.2	22.0	27.2	32.3	38.1	46.5	53.4	66.3

* Mean force for each one-quarter inch :

Inch-pounds of force required :

Total work in inch-pounds from diagram, 472.8.

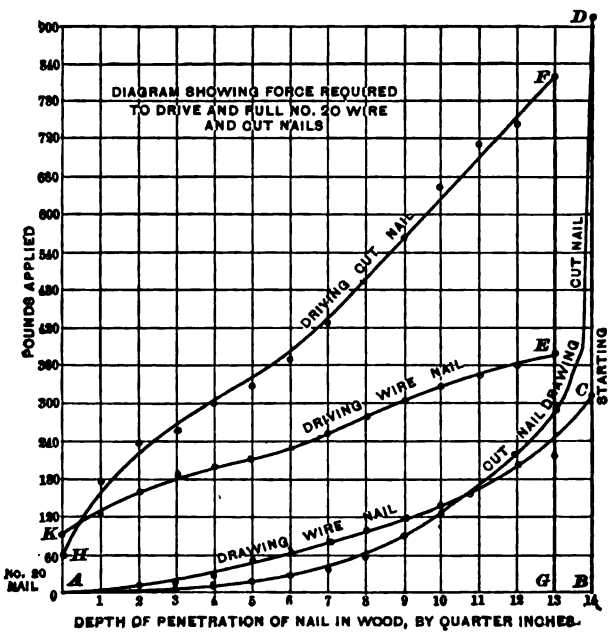

FIG. 277.

Digitized by Google

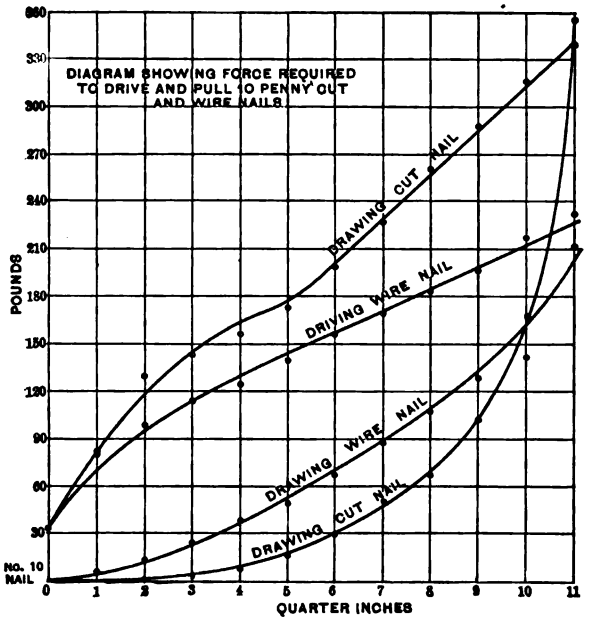

FIG. 278.

FORCE IN POUNDS REQUIRED IN DRIVING 10-PENNY CUT NAILS.

	DEPTH IN INCHES.											
	¼	½	¾	1	1¼	1½	1¾	2	2¼	2½	2¾	3
1	28	60	148	184	184	184	192	232	260	288	340	340
2	24	28	144	148	148	168	192	220	240	288	320	340
3	28	68	140	140	156	144	168	212	244	292	320	344
4	16	88	148	152	120	128	144	168	208	208	262	312
5	32	88	140	140	160	220	240	240	240	256	264	280
6	24	60	120	100	124	148	220	272	308	300	308	392
7	32	80	108	132	144	168	200	228	246	290	312	344
8	40	64	108	124	160	184	212	248	292	328	360	368
9	32	80	120	148	160	192	224	240	300	322	344	376
10	40	90	128	168	190	196	200	220	260	270	300	330
	29.6	77.8	129.6	143.6	154.6	173.2	199.2	228.0	261.6	286.6	315.6	341.6

Digitized by Google

FORCE IN POUNDS REQUIRED IN PULLING 10-PENNY CUT NAILS.

	DEPTH IN INCHES.											
	½	¾	⅞	1	1¼	1½	1¾	2	2¼	2½	2¾	3
1	0	0	0	0	4	4	16	28	72	120	160	324
2	0	0	0	4	10	14	28	44	64	96	180	340
3	0	0	0	0	4	16	16	32	68	68	164	320
4	0	0	0	2	8	10	20	40	68	78	98	308
5	0	0	0	0	4	20	32	40	56	60	92	228
6	0	0	0	0	4	14	36	64	72	100	212	400
7	0	0	0	0	4	20	36	72	92	116	224	448
8	0	0	0	4	8	28	44	60	100	148	192	420
9	0	0	4	4	8	20	36	44	76	120	190	420
10	0	0	4	8	16	32	40	60	84	112	152	300
	0	0	.8	2.2	7	17.8	30.4	48.4	66.2	102.4	171.4	356.8

FORCE IN POUNDS REQUIRED IN DRIVING 10-PENNY WIRE NAILS.

	DEPTH IN INCHES.											
	½	¾	⅞	1	1¼	1½	1¾	2	2¼	2½	2¾	3
1	24	100	132	160	168	188	200	208	228	240	288	300
2	28	80	84	92	112	128	152	164	188	192	220	240
3	20	88	104	108	128	128	136	184	152	160	180	188
4	40	68	84	80	96	120	136	148	160	168	184	200
5	32	64	84	100	120	124	140	148	168	180	188	204
6	36	76	86	128	136	148	164	180	196	208	228	240
7	28	68	92	116	120	120	144	156	168	188	220	224
8	24	80	96	108	124	144	160	164	176	184	208	216
9	40	68	92	120	128	152	172	184	216	220	240	260
10	44	88	108	128	130	156	172	188	200	216	232	252
	31.6	78	96.8	114	125.4	140.8	157.6	168.8	183.2	195.6	218.8	228.4

FORCE IN POUNDS REQUIRED IN PULLING 10-PENNY WIRE NAILS.

	DEPTH IN INCHES.											
	½	¾	⅞	1	1¼	1½	1¾	2	2¼	2½	2¾	3
1	0	4	20	40	44	64	80	120	140	168	188	330
2	0	0	6	12	28	36	44	76	88	80	92	140
3	0	0	8	16	24	30	40	60	84	92	92	120
4	0	6	12	24	36	40	54	76	84	92	88	134
5	0	0	8	20	36	48	64	76	84	97	120	160
6	0	8	20	24	44	56	76	88	116	136	180	336
7	0	12	20	28	44	60	68	96	120	132	148	180
8	0	4	8	20	32	44	64	80	108	112	140	160
9	0	8	20	28	50	64	84	100	120	140	190	300
10	0	8	20	32	44	56	80	100	140	236	200	296
	0	5	14.2	24.4	38.2	49.8	65.4	88.8	108.4	129.2	143.8	213.6

Digitized by Google

FORCE REQUIRED IN DRIVING 10-PENNY CUT NAILS, SHARPENED.

	DEPTH IN INCHES.											
	½	¼	¾	1	1¼	1½	1¾	2	2¼	2½	2¾	3
1	12	36	92	140	176	216	284	280	294	380	436	460
2	16	44	100	128	160	200	230	252	316	360	400	500
3	12	30	72	108	152	184	220	268	304	356	380	446
4	20	68	108	148	188	220	260	292	344	380	420	480
5	12	48	104	148	176	216	248	280	324	348	408	464
6	12	24	80	112	148	200	244	272	316	376	456	540
7	16	36	84	128	200	232	308	400	440	460	508	660
8	16	40	80	128	176	232	248	288	340	420	460	492
9	20	44	108	152	168	184	220	248	284	380	384	416
10	12	44	88	124	164	204	256	280	300	320	340	372
	14.8	41.4	91.6	126.6	170.8	208.8	251.8	284	329.2	378	419.2	483

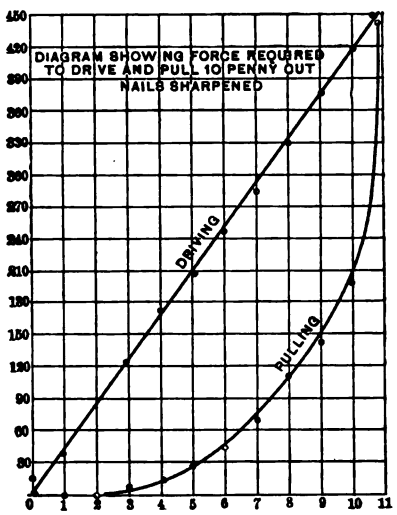

FIG. 279.

FORCE REQUIRED IN PULLING 10-PENNY CUT NAILS, SHARPENED.

	DEPTH IN INCHES.											
	½	¼	¾	1	1¼	1½	1¾	2	2¼	2½	2¾	3
1	0	0	0	2	8	24	40	60	120	152	200	452
2	0	0	0	0	6	24	44	72	108	140	180	456
3	0	0	4	12	16	48	68	108	140	180	220	548
4	0	0	0	20	28	44	60	80	120	160	244	520
5	0	0	2	8	20	24	54	64	96	124	180	512
6	0	0	0	0	4	16	28	76	116	140	200	564
7	0	0	0	0	8	28	40	76	108	140	180	672
8	0	0	0	4	12	28	44	80	112	148	224	488
9	0	0	0	2	8	20	36	48	68	128	184	540
10	0	0	0	4	16	28	48	68	104	140	192	428
	0	0	.6	5.2	12.6	28.4	46	73.2	109.2	145.2	200.4	518

Digitized by Google

FORCE IN POUNDS REQUIRED IN DRIVING 8-PENNY CUT NAILS.

	DEPTH IN INCHES.								
	¼	½	¾	1	1¼	1½	1¾	2	2¼
1	40	120	120	150	180	184	200	240	252
2	70	96	124	132	180	200	272	304	320
3	68	120	120	136	196	196	228	272	300
4	44	88	128	140	188	204	224	292	312
5	60	84	124	134	180	196	220	288	300
6	52	80	116	128	192	200	264	284	308
7	64	116	136	144	172	212	260	308	340
8	72	112	140	152	184	204	272	300	324
9	56	72	128	164	180	200	292	308	352
10	70	88	132	172	169	204	284	316	316
	59.6	97.6	126.8	145.2	182.1	200.0	251.6	291.2	312.4

FORCE IN POUNDS REQUIRED IN PULLING 8-PENNY CUT NAILS.

	DEPTH IN INCHES.								
	¼	½	¾	1	1¼	1½	1¾	2	2¼
1	0	0	2	12	20	30	40	80	280
2	0	0	2	6	32	48	88	160	404
3	0	0	2	8	16	36	44	88	300
4	0	0	4	8	20	36	56	90	360
5	0	0	4	10	16	44	88	96	308
6	0	0	2	6	32	36	56	80	324
7	0	0	4	10	20	36	60	90	316
8	0	0	2	8	12	40	52	88	296
9	0	0	4	8	16	32	56	96	304
10	0	0	6	16	24	36	52	128	392
	0	0	3.2	9.2	20.8	37.4	59.2	100.2	328.4

FORCE IN POUNDS REQUIRED IN DRIVING 8-PENNY WIRE NAILS FOR EACH QUARTER INCH OF DEPTH.

	DEPTH IN INCHES.								
	¼	½	¾	1	1¼	1½	1¾	2	2¼
1	56	76	80	84	100	124	132	160	200
2	76	88	88	100	116	124	130	160	188
3	56	88	100	100	116	140	152	180	188
4	64	88	92	104	108	132	148	192	204
5	72	80	96	100	124	116	140	188	216
6	60	88	100	100	128	136	148	172	192
7	68	80	92	100	120	136	160	180	196
8	76	94	104	112	124	130	152	180	200
9	60	80	96	100	116	140	152	180	208
10	64	88	92	104	124	132	148	172	196
	65.2	85.0	94.0	100.4	117.6	131.0	146.2	176.4	196.8

Digitized by Google

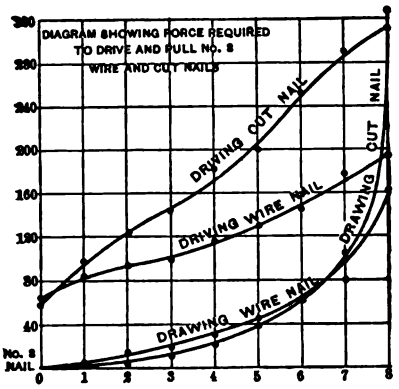

FIG. 280.

FORCE IN POUNDS REQUIRED IN PULLING 8-PENNY WIRE NAILS.

	DEPTH IN INCHES.								
	¼	½	¾	1	1¼	1½	1¾	2	2¼
1	0	4	10	14	20	44	56	88	148
2	0	4	12	16	40	48	64	76	172
3	0	4	12	20	32	40	56	64	160
4	0	4	12	16	20	48	56	88	168
5	0	6	16	14	32	44	56	76	172
6	0	4	8	14	28	48	64	84	156
7	0	4	14	18	36	40	68	96	184
8	0	6	12	18	24	52	58	72	152
9	0	4	14	16	40	48	64	76	184
10	0	4	12	16	32	44	76	88	176
	0	4.4	12.2	16.2	30.4	45.6	61.8	80.8	167.2

FORCE IN POUNDS REQUIRED IN DRIVING 6-PENNY CUT NAILS.

	DEPTH IN INCHES.						
	¼	½	¾	1	1¼	1½	1¾
1	72	100	136	170	180	180	180
2	80	140	140	152	200	200	232
3	76	88	124	168	188	208	212
4	64	96	116	156	192	200	208
5	72	88	144	172	204	216	224
6	76	120	120	162	196	208	220
7	70	116	132	176	200	204	228
8	68	96	116	156	188	220	244
9	84	116	132	178	192	216	228
10	80	108	128	160	200	224	236
	74.2	106.8	128.8	165.0	194.0	207.6	221.2

Digitized by Google

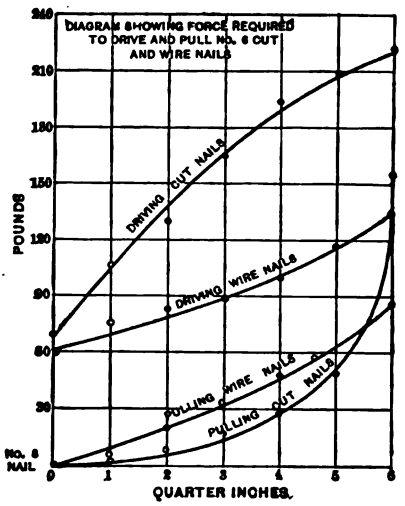

FIG. 281.

FORCE IN POUNDS REQUIRED IN PULLING 6-PENNY CUT NAILS.

	DEPTH IN INCHES.						
	¼	½	¾	1	1¼	1½	1¾
1	0	0	6	16	24	44	140
2	0	0	8	12	20	40	160
3	0	0	8	16	24	44	120
4	0	0	6	14	20	40	144
5	0	0	10	12	28	52	148
6	0	0	14	20	28	60	156
7	0	0	8	18	32	56	160
8	0	0	12	24	36	52	182
9	0	0	8	18	30	58	166
10	0	0	6	14	38	50	180
	0	0	8.6	16.4	28.0	49.6	155.6

Digitized by Google

FORCE IN POUNDS REQUIRED FOR DRIVING 6-PENNY WIRE NAILS.

	DEPTH IN INCHES.						
	¼	½	¾	1	1¼	1½	1¾
1	56	76	80	84	100	104	120
2	44	64	68	80	88	112	116
3	52	68	68	76	96	108	120
4	60	72	76	80	92	112	124
5	68	70	74	80	96	104	120
6	64	76	80	88	100	108	116
7	72	76	84	92	104	116	124
8	76	84	92	104	112	128	132
9	70	92	92	96	108	124	128
10	66	90	96	102	116	144	152
	60.8	76.8	82.0	89.2	101.2	116.0	134.6

FORCE IN POUNDS REQUIRED FOR PULLING 6-PENNY WIRE NAILS.

	DEPTH IN INCHES.						
	¼	½	¾	1	1¼	1½	1¾
1	0	4	20	40	56	64	88
2	0	6	16	32	40	56	84
3	0	6	20	26	34	44	80
4	0	6	24	32	56	68	96
5	0	2	18	24	52	68	92
6	0	4	16	32	40	56	80
7	0	8	16	36	44	56	76
8	0	4	20	32	48	52	88
9	0	6	22	36	56	66	96
10	0	2	16	36	44	72	96
	0	4.8	18.8	32.6	47.0	60.2	87.6

DISCUSSION.

Prof. R. H. Thurston.—This matter seems to me of more importance than is usually ascribed to it. The value of the nail in the holding together of constructions, in wood of all kinds, is a measure of a pretty large element in modern civilization. The problem, as I would state it, is that of finding a way of making nails which shall drive easily, without danger of injuring the wood or of splitting the parts; which shall, once driven, hold firmly and under all circumstances; and which shall, finally, draw with as even resistance as possible from head to point.

Digitized by Google

The starting resistance, usually the only element of value reported upon in such experiments, is of less value, probably, than is commonly assumed. Every nail is liable to be, at least, started by some sudden and excessive stress, and the seasoning and drying and springing of the wood with age and with change of hygrometric condition is liable to produce a tendency to loss of holding power, if not to actually loosen it. Holding power is of more consequence than easy driving; and that is the best nail, other tnings equal, which holds best, even if hard to drive. That is the best, other things equal, which, though started by any accident or change of conditions affecting it, will continue to hold with the largest resistance and most persistence. It would thus seem that the work of resistance to extraction, and not the resistance to starting, is the best measure. In fact, it is not precisely even the work which should be a maximum; it should be a maximum work at the earlier stages of the withdrawal. After the nail is well out, further resistance is commonly of comparatively little importance. The structure is ruined, and, after that limit is passed, the easier the ruin is taken apart the better. A nail hard to start, and hard to draw the first, say, twenty per cent. of its length, is the best thing in most cases.

It would seem that the true fact of the case is that some work requires one nail, and other kinds of work another sort of nail. For temporary holding we need one, and for permanent construction another. In one case, the harder the nail to start the better; in another, the longer and more steadily and persistently it holds the better. One construction is spoiled by a started nail; another remains useful and valuable, even though wrenched in all directions. It would seem, for these reasons, desirable to compare the various makes and kinds of nails with a view to their classification for different uses. The cut nail starts harder, as a rule, but loses its hold more promptly, than the wire nail. For general purposes, the latter would seem superior. Where drawing forms a part of the programme, the cut nail has its advantage. When the piece must be held firmly and closely together, the cut nail gives best result; but where a started nail must still hold, long and hard and without let-up, the wire nail is unquestionably best. With some woods, in which injury to the fibre is a serious matter, the wire nail is the only allowable form; when no harm is done by the crushing of fibre, the cut nail is permissible, though otherwise objectionable. The elastic hold, secured

Digitized by Google

by the pressure on the sides of the wire nail by the springing of the grain, is an advantage where prolonged holding power is exacted.

The graphical representation of results here given us has seemed to me, from this point of view, particularly valuable, and it is to be hoped that we may secure much more of the same sort of information and from every known variety of nail, screw, or other fastening.

Mr. Gustavus C. Henning.—There is one point which has not been brought out in this investigation, and that is, that a wire nail contains fifty per cent. less material than a cut nail, in every instance; that is, for five cents you get just seven and one-half cents' worth of nails. As the carpenter puts it, a ten or twelve-inch board holds so many nails, and he won't put any more in, and they don't care much whether they hold or not in that case, but the nails go so much further. Now, to make a true comparison in regard to holding qualities, it seems to me nails should be compared so that the amount of material in them is about the same in the two cases. It may be that a particular shape of wire nail may be so made that it goes in uniformly hard and holds better when it is in, without injury to the job. The fact is, that cut nails do crush the wood, and do not hold so well afterwards as when newly driven, while the wire nail always holds. But I think it would be well to find out what the nail will hold in the shape of a wire nail when it contains as much material as a cut nail.

Prof. John E. Sweet.—To give a couple of illustrations in regard to the holding power of nails, I wish to report what was told me at the Exposition in Chicago, where we had considerable discussion as regards the holding power of nails. The people who sell shoes will not buy a box of shoes if the cover is nailed on with wire nails, for the reason that when they take off the cover they spoil it. They want it nailed on with cut nails, so that they can get the cover off and save it. The people who sell drop forgings have a different preference. The Billings & Spencer people told me that before they adopted the wire nails for nailing boxes, the percentage of broken boxes was enormous; but after they adopted the wire nail they never received a report that boxes were broken; showing that if you want to nail a box together to stay, you want to use wire nails. All of us have known this for a long time. These experiments have not gone far enough yet. This box question is one of the questions to be considered in using

Digitized by Google

nails. The nails in Professor Carpenter's test have been driven in the wood with the wide part of the nail parallel to the grain of the lumber. When we nail up a box and nail on the sides, we drive the nails into the ends of the wood; and when we nail on the top, we nail the ends of the top with the wide part of the nail parallel with the grain of the cover, but just the way to split the end, and the nail comes out easily. Now, if one will make some experiments with nails put in in that way, he will see that the *tests* and the *facts* agree a good deal better than some which we have had before, and that the test comes a good deal nearer the facts of the case than where they are tested in the way spoken of by the editor of the *American Machinist*. He said that if they were testing armor-plate the shot always went to pieces, and if they were testing the shot the armor-plate went to pieces. In the same way with nails; if you want to make the cut nails show well, you can do it if you go about the test in a certain way.

*Prof. R. C. Carpenter.**—If the reader will kindly refer to the table at the top of page 1004, he will find given there the total weight required both to start and pull one pound of each kind of nails, and also the total work expended in foot-pounds in so doing.

Regarding the total weight for starting, which is given in tons, it will be seen to be nearly the same for two kinds of nails, being slightly less for cut than for wire nails for the tenpenny size, and slightly greater for the other sizes, the difference in each case being small. This would seem to me to tend somewhat against the statement made by Mr. Henning, and would rather serve to show that, if a less weight of wire nails than cut nails were used in a given structure, the resistance to starting stress would be less, although it is quite true that the work required for pulling the wire nails, if equal weights were used, would be considerably more. The remarks by Professor Sweet indicate a fertile field for research, which it is hoped can be investigated. There is another point which is somewhat difficult to investigate by experiment, and that is that wire nails bend very easily, and for that reason are hard to pull in the ordinary way with a hammer. This may lead in a popular way to an exaggerated notion regarding the holding power.

* Author's closure, under the Rules.

Digitized by Google

DCLII.*

TESTS TO SHOW THE DISTRIBUTION OF MOISTURE IN STEAM WHEN FLOWING THROUGH A HORIZONTAL PIPE.

BY D. S. JACOBUS, HOBOKEN, N. J.

(Member of the Society.)

In a previous paper preliminary tests were presented, which were made in connection with an investigation undertaken for the Babcock & Wilcox Company by Professor Denton.† In this paper it was demonstrated that various calorimeter nozzles, such as are now used in practice, do not give an average sample of the steam flowing through the steam main. It was also stated that tests were in progress to determine the efficiency of a nozzle devised by Professor Denton, which consists of a $\frac{1}{2}$-inch tube open at the end, passing through a stuffing-box, and so arranged that it may be moved to any position across the pipe under a full head of steam.

The tests made with the tube passing through a stuffing-box indicated that a greater part of the moisture was near the bottom of a horizontal pipe, and that it probably ran along in a small stream. If this was true, then an opening in the bottom of the pipe, so arranged that the water could run freely into it, would glean off all, or the greater part, of the moisture. The tests which are the subject of this paper were made by the writer to determine to what extent such an action takes place, and are a continuation of the preliminary investigation above referred to.

It was found that after steam had passed through 8 feet of horizontal 3-inch pipe, 95 per cent. of the entrained moisture, or over, could be drawn from a $\frac{1}{2}$-inch pipe leading from the bottom of the 3-inch pipe, for quantities of moisture as high as 8 per cent., and velocities as high as 25 feet per second.

* Presented at the Detroit meeting (June, 1895) of the American Society of Mechanical Engineers, and forming part of Volume XVI. of the *Transactions*.

† "Results of Measurements to Test the Accuracy of Small Throttling Calorimeters," *Transactions*, Vol. XVI., p. 448.

Digitized by Google

The moisture was thoroughly mingled with the steam before entering the 3-inch pipe. The apparatus was so arranged that the greater part of the moisture was initially near the top of the pipe, so that it had to fall through the steam during the time taken to travel over the space of 8 feet. The theoretical time required for a body falling freely in space to travel from the top to the bottom of the pipe is about $\frac{1}{8}$ of a second. Hence, the maximum initial horizontal velocity that such a body could have and reach the bottom in a horizontal space of 8 feet would be 64 feet per second.

It appears from the experiments, therefore, that for the particular set of conditions which existed, 95 per cent. of the moisture can be gleaned from the bottom of a pipe, if the velocity of the steam is ^{3} that corresponding to the theoretical velocity already mentioned. For a velocity of 20 feet per second, or about $\frac{1}{3}$ the theoretical velocity, 98 per cent. of the moisture was drawn from the bottom of the pipe for quantities of moisture as high as 10 per cent. For a velocity of 43 feet per second, or $\frac{7}{10}$ of the theoretical velocity, about 60 per cent. of the total moisture was drawn from the bottom of the pipe, and at $\frac{1}{2}$ of the theoretical velocity about 90 per cent. was drawn out.

It cannot be said that these ratios will apply to all cases, and for this reason additional tests are to be made to determine the effect of increasing the velocity of flow and the length of the horizontal pipe.

A special series of experiments was made, in which a horizontal plate was placed about $\frac{3}{4}$ of an inch above the bottom of the 3-inch pipe, and over the $\frac{1}{2}$-inch pipe leading to the calorimeter. The plate was arranged so that all the moisture which collected under it would run into the calorimeter. The object of introducing the plate was to collect all the water which was near the bottom of the pipe, so as to determine to what extent a nozzle, simply tapped into the bottom of the pipe, would remove such moisture. The results of corresponding tests, with and without the plate over the calorimeter nozzle, are about the same, which indicate that a nozzle connected so that its inner end is flush, or slightly below the bottom of the pipe, will remove practically all the moisture which flows near the bottom of the pipe.

The results of my experiments on the 3-inch pipe are given in detail in Table I.

In Professor Denton's experiments a single calorimeter was at

Digitized by Google

first attached to the bottom of a horizontal 12-inch pipe by means of a nozzle, which could be raised and lowered so as to draw steam from various sections of the pipe, as has been already described. It was found that the weight of moisture ranged between about 5 and 50 per cent. of the weight of steam passing through the calorimeter when the nozzle was lowered so as to be near the bottom of the pipe; whereas, when the nozzle was raised so as to be about $1\frac{3}{4}$ inches above the bottom of the pipe, the steam which passed through the calorimeter was practically dry. In these tests the steam passed from the boiler through about 10 feet of horizontal 12-inch pipe to an elbow, and thence through a second horizontal 12-inch pipe. The calorimeter was attached to the second horizontal pipe about 6 feet from the elbow. The velocity of the steam was about 17 feet per second, representing about 500 H. P.

After making the tests with a single calorimeter, a second series of tests was made with two calorimeters, to determine if the moisture was all at the bottom, or if it was also creeping along the sides of the pipe. To make these tests the second calorimeter was placed at the same cross-section of the pipe as the first, but it was moved to one side, so as to be 4 inches from the calorimeter attached directly to the bottom of the pipe. It was found that when both nozzles were set so that the ends were flush with the inner surface of the pipe, the calorimeter at the bottom of the pipe indicated excessive moisture, whereas the calorimeter 4 inches from it toward the side of the pipe showed practically dry steam. This indicated that all the moisture was at the bottom of the pipe.

The general arrangement of apparatus used by the writer for conducting the tests on the 3-inch horizontal pipe is represented in Fig. 282.

Superheated steam entered at *A*, and passed through a 3-inch pipe surrounding a cooling pipe, *B*. The cooling water entered at *C* and passed through *B*. After passing the cooling pipe the steam passed through a device at *D*, which thoroughly mixed the steam with the water. This consisted of two plates placed about 1 inch apart, in which were two holes about $\frac{7}{8}$ of an inch in diameter. The hole in the first plate encountered by the steam was at the bottom of the pipe, so that all moisture in the steam would be drawn from the bottom of the pipe. The steam and moisture then passed upward between the plates

Digitized by Google

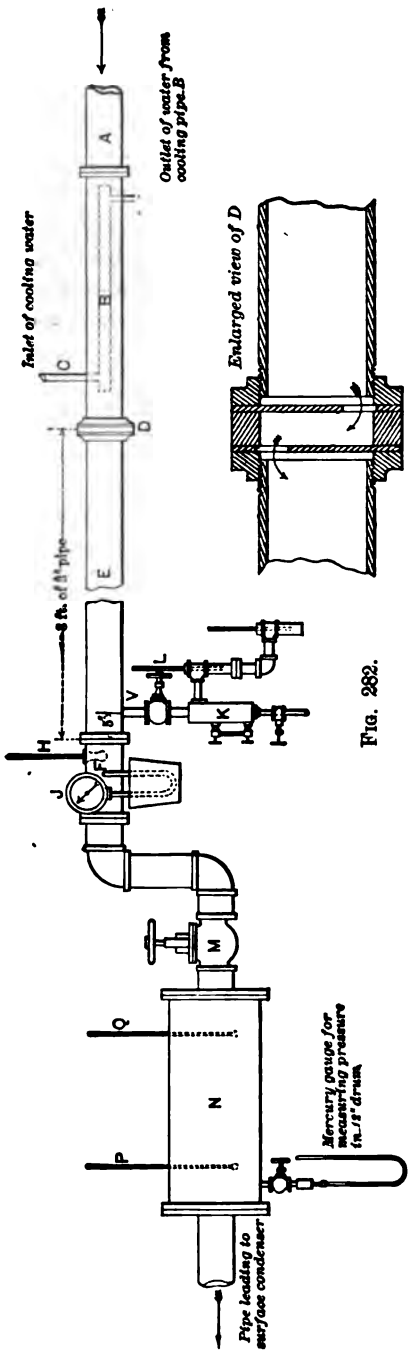

FIG. 282.

and out of the hole in the second plate. The hole in the second plate was placed near the top, so as to introduce the steam and moisture near the top of the 3-inch pipe, *E*. The calorimeter was attached at *V*. *K* is the separator portion of the calorimeter, and *L* the heat gauge. The temperature and pressure of the steam were measured on leaving the pipe *E* by means of the thermometer, *H*, and the pressure gauge, *J*. The thermometer, *H*, was placed in a mercury well having an enlargement at its lower end and a thin neck. The steam was throttled by means of the valve, *M*, from a pressure of about 80 pounds above the atmosphere in the pipe, *E*, to about the pressure of the atmosphere in the 12-inch drum, *N*. The temperature of the steam after throttling was measured by a thermometer, *Q*, placed in a mercury well, and by a thermometer, *P*, which came in direct contact with the steam. The pressure in the drum, *N*, was measured by means of a mercury gauge. The steam flowing into the drum, *N*, was led to a surface condenser, and finally weighed.

The amount of moisture in the steam passing through the valve, *M*, was indicated

Digitized by Google

by the amount of superheating in the 12-inch drum, *N*. This moisture, added to the moisture in the steam entering the Barrus calorimeter, gave the total moisture contained in the steam passing through the 3-inch pipe. Corrections, determined directly by experiment, were made for all radiation. The factor of 0.48, for the specific heat of steam, was employed in calculating the percentage of moisture, and special experiments were made to show how nearly this method would agree, in the case of the 12-inch drum, with the experimental normal reading for dry steam. These experiments, from the nature of the apparatus, could be made only with steam just at the point of superheating, or with slightly superheated steam, and the results obtained were the same as in similar tests made on a Barrus calorimeter, and given in the paper on "Errors of Calorimeters."

It was found that the experimental normal reading for steam probably near the maximum state of dryness, when corrections were made for all radiation, and the temperatures were corrected so as to correspond to those registered by an air thermometer, was about 3 degrees higher than the theoretical normal reading.

The initial pressure in all the tests was about 80 pounds per square inch above the atmosphere.

With steam that was slowly condensing the tests made in connection with the "Errors of Calorimeters" showed that the normal reading with a Barrus calorimeter was 3 degrees lower than for steam of the maximum dryness, so that if this same difference applies to the 12-inch drum, the experimental normal reading for steam which is slowly condensing, and therefore contains the maximum amount of moisture, would be about the same as the theoretical normal reading, employing a factor of 0.48 for the specific heat of steam. It was impossible to regulate the quality of the steam in determining the experimental normal reading of the 12-inch drum *N*, so as to be certain of the exact condition in which it existed at *V*. The tests given in the Appendix show, however, that the possible discrepancy from this cause was less than that equivalent to $\frac{1}{0}$ of 1 per cent. of priming.

Three series of tests were made. In the first there was no mixing device placed at *D*. In these it was found that the thermometer, *H*, would indicate superheating with considerable moisture entering the calorimeter nozzle, *V*. The second series

Digitized by Google

TABLE I.

PERCENTAGE OF TOTAL MOISTURE ENTERING A 8-INCH HORIZONTAL STEAM PIPE THAT IS REMOVED BY A ¼-INCH DRIP PIPE.

The moisture in each case was either thoroughly mingled with the steam, or the greater part of it was near the top of the 8-inch pipe at a point 8 feet distant from the ¼-inch drip pipe. Much of the moisture had, therefore, to fall through a distance nearly equal to the diameter of the 8-inch pipe before it was drawn out at the ¼-inch drip pipe.

Conditions under which the tests were made.	Number of test.	Velocity of steam in 8-inch pipe in feet per second.	Percentage of Moisture in steam passing through 8 inch pipe.		Percentage of total moisture removed by the ¼-inch drip pipe leading to the Barrus calorimeter.
			Before reaching drip pipe.	After passing drip pipe.*	
1	2	3	4	5	6
First series of Tests. Moisture produced by the cooling pipe marked *B* in Fig. 1. No mixing device at *D*.	1	65.1	3.9	2.2	45.6
	2	64.7	1.9	0.9	55.7
	3	63.8	1.5	0.4	71.7
	4	52.3	1.6	0.3	84.4
	5	52.2	4.2	1.6	62.8
	6	41.9	3.3	0.3	91.5
	7	38.1	4.8	0.6	88.6
	8	38.1	2.6	0.5	82.8
	9	38.1	2.4	0.4	85.6
	10	38.1	0.3	0.0	100.0
	11	38.0	1.6	0.2	89.0
Second series of Tests, in which a mixing device was placed at *D* to thoroughly mingle the steam and water.	12	38.0	0.4	−0.1	100.0
	13	24.9	4.8	0.1	98.7
	14	24.8	3.1	−0.1	100.0
	15	24.5	8.2	0.5	95.0
	16	19.2	8.8	0.5	95.5
	17	16.0	8.8	0.3	97.4
	18	16.0	6.6	0.1	98.1
	19	15.9	1.0	−0.1	100.0
	20	15.6	5.4	−0.1	100.0
Third series of Tests, in which the steam and entrained moisture was supplied through a vertical 8-inch pipe, and flowed through an elbow into the horizontal 8-inch pipe.	21	43.1	3.5	1.2	67.3
	22	42.7	2.3	0.7	68.8
	23	35.9	1.3	0.2	85.2
	24	35.8	3.4	0.7	80.8
	25	31.1	3.5	0.3	91.7
	26	31.1	2.1	0.1	95.0
	27	20.9	12.1	0.5	96.8
	28	20.6	7.8	0.0	100.0
	29	20.5	2.5	−0.1	100.0
	30	20.2	3.8	0.1	97.1
	31	15.8	5.6	−0.2	100.0
	32	15.4	8.7	−0.2	100.0
Special tests in Third Series, in which a plate was placed over the drip pipe leading to the calorimeter, so as to collect all moisture that was near the bottom of the pipe.	33	42.1	3.5	1.1	66.6
	34	42.1	2.2	1.2	49.4
	35	41.9	2.4	1.1	57.4
	36	38.1	2.4	0.6	77.8
	37	34.3	2.5	0.1	96.7
	38	33.1	3.4	0.0	100.0
	39	26.9	7.3	−0.1	100.0
	40	26.8	4.8	0.0	100.0
	41	20.5	4.3	−0.1	100.0
	42	20.2	13.1	0.4	97.4
	43	20.2	4.9	0.0	100.0

* The percentages of priming given in this column are calculated from the superheating in the 12-inch drum, and are correct to within about ½ of 1 per cent. The minus values are either accidental discrepancies, or they are caused by the fact that the steam was initially superheated, and tended to retain the property of producing a slightly higher "normal reading" than that given by the theoretical formula.

Digitized by Google

of tests was made after adding the mixing device, *D*. In the third series of tests the 3-inch pipe containing the cooling pipe, *B*, was lowered, together with the mixing device, *D*, and the steam was made to pass through an S-shaped connection of 3-inch pipe into the pipe *E*. This caused the steam which was admitted to *E* to pass upward through a vertical pipe, then turn through an elbow into the pipe *E*. The object of the latter arrangement was to make the mixture of steam and water enter the pipe *E* at the same velocity at which it flowed through the pipe *E*. When the steam and moisture entered the 3-inch pipe directly from a $\frac{7}{8}$-inch hole in the mixing device, *D*, it was initially at a much greater velocity than the average velocity in the pipe *E*, but it was considered best to make tests in this way, so as to have one set of tests in which the conditions were as severe as possible.

An Appendix is added, which gives the calculation of one of the tests in detail, together with the results of experiments to determine the radiation, and the details of the tests made to obtain the normal reading of the 12-inch drum.

APPENDIX.

The percentage of moisture in the steam was calculated from the amount of superheating of the steam in the 12-inch drum marked *N* in Fig. 282. Corrections were made for all radiation. The drum *N* was the same one which was employed in the tests to determine the accuracy of small throttling calorimeters, and which was shown to give results that were accurate to within $\frac{1}{8}$ of 1 per cent. of priming.*

To determine the radiation, superheated steam was passed through the apparatus, the valve *M* being wide open. The temperature of the superheated steam was made such that the thermometer *P*, in the drum *N*, registered the temperature which existed throughout the regular tests.

The rate of flow of superheated steam in pounds per hour was varied in the tests for radiation, so that the correction corresponding to the particular velocity could be made for each of the regular tests. The pressure in the drum *N* was the same as existed in the regular tests.

In the radiation tests the Barrus calorimeter was removed, and

* *Transactions*, vol. xvi., p. 448.

Digitized by Google

a mercury column was placed at *V*. The results of the tests for radiation are given in Table A.

The corrections for radiation in degrees Fahr. are about equal to 4,550 ÷ weight of steam in pounds per hour, and this value has been employed in calculating the corrections for radiation, which were applied to all the tests.

Before making the final calculations experiments were made to determine the "normal reading" of the drum *N*. These experiments could not be made with a great degree of refinement, as it was impossible to regulate the quality of the steam so as to bring it to a known condition when it reached the throttling valve.

It was shown, in my test on a Barrus calorimeter, that 3 degrees difference in the temperature of the outlet steam could be obtained with steam which was of the maximum dryness without superheating, and with steam which was slowly condensing and contained the maximum amount of mist.*

In obtaining the normal readings of the drum *N* it was impossible to regulate the quality of the steam closer than the equivalent in priming of this amount of superheating, which is about $\frac{1}{6}$ of 1 per cent. It is probable, however, that the steam used in obtaining the normal readings was nearly at the maximum state of dryness, for it was initially superheated, and was cooled only to such an extent that a small amount of water appeared at intervals at the bottom of the pipe at the point *V*, with no superheating registered by the thermometer at *H*.

The experiments to determine the normal readings were made after the S-shaped connection had been added to the apparatus shown in Fig. 282, so that the steam which was initially superheated passed first through a pipe containing the cooling pipe *B*, and the mixing device *D*, and thence through the S-shaped connection to the pipe *E*. The amount of cooling water admitted at *C* was regulated so that moisture would appear in small amounts, and only at intervals, in the separator, *K*, of the Barrus calorimeter.

The results of the tests are given in Table B.

An examination of the results of tests contained in Table B will show that the experimental normal readings were about 3 degrees Fahr. higher than the theoretical normal readings.

If the steam in the experiments was at or near the maximum state of dryness, which, as has already been stated, was probably

* *Transactions*, vol. xvi., p. 460.

Digitized by Google

the case, then, subtracting 3 degrees for the difference in the states of steam in this condition and when slowly condensing, the reading of the drum *N* for steam which is slowly condensing will agree with the theoretical normal reading.

The theoretical normal readings were employed in calculating the results given in Table I., for, as has been stated in my article on calorimeters, we do not know which of the above states of the steam, if either, is the same as the steam used in Regnault's experiments; and the experiments just described to determine the normal reading of the 12-inch drum *N*, show that there cannot be a discrepancy of over $\frac{1}{8}$ of 1 per cent. of priming, which is about the variation of duplicate tests.

Tests to determine the normal reading of the 12-inch drum *N* were also made, in which there was a slight amount of superheating registered by the thermometer at *H*. The results of these tests are given in Table C, and show that there is a difference between the experimental and theoretical normal readings of over 6 degrees Fahr.

Assuming the figure obtained in this way to be the true normal reading for steam of the maximum state of dryness, and that the normal reading for steam which is slowly condensing is 3 degrees lower, as was found to be true for the Barrus calorimeter, then there is a discrepancy in the results in Table I. of 3 degrees in the normal reading, or of about $\frac{1}{8}$ of 1 per cent. of priming. It may be, however, that the steam requires more heat to produce the first one or two degrees of superheating than it does at the higher temperature, where it approaches more nearly to the properties of a perfect gas. If this is so, the discrepancy of 3 degrees in the normal readings, obtained with the superheated steam, may disappear.

The normal reading of the Barrus calorimeter, as has been already stated, was found by experiment to be about the same as the theoretical, for steam which was slowly condensing, in tests which were given in my first paper. In the present tests the same holds true, within $\frac{1}{8}$ of 1 per cent. of priming, or less, when throttling from a 3-inch into a 12-inch drum. It is not safe, however, to draw a general conclusion that this will be so for all methods of throttling, or even for a method of throttling in which the conditions are exactly in accord with the theoretical formula.

We expect to make further experiments to cover this ground.

Digitized by Google

The radiation of the Barrus calorimeter was allowed for in the manner described in my paper on "Tests for Accuracy of Small Throttling Calorimeters." The radiation of the separator portion was equivalent to 3.9 degrees of superheating.

The experimental normal readings of the heat-gauge portion averaged 1.1 degrees Fahr. lower than the theoretical normal readings, when no correction was made for radiation, and the quality of the steam was so regulated that there was a small amount of water removed by the separator portion of the calorimeter. The correction for radiation of the heat-gauge portion was about 1½ degrees Fahr., so that there was a discrepancy of about ½ degree Fahr. between the theoretical and experimental reading, which was less than the probable error in the experiments.

The average results obtained with the heat-gauge portion of the Barrus calorimeter are given in Table D.

In all the tests the weight of steam condensed in the condenser and drawn from the separator of the Barrus calorimeter was recorded every five minutes. All other readings were made every two and one-half minutes. A continuous record was preserved, and only those portions of the records where the readings showed that the conditions were uniform were used in calculating out the results of the tests. The average length of these selected intervals was about twenty minutes.

The readings of the thermometers were corrected, so that the temperatures employed in calculating the results, and given in the tables, are those that would be registered by an air thermometer.

METHOD OF COMPUTING THE RESULTS GIVEN IN TABLE I.

The data and calculations in detail of Test No. 17 are as follows:

1.	Duration of selected interval over which average data are obtained, in minutes	20
2.	Steam condensed in surface condenser, in pounds per hour	622
3.	Steam passing through orifice of Barrus calorimeter, in pounds per hour	58
4.	Water drawn from separator of Barrus calorimeter, in pounds per hour	63.75
5.	Equivalent of radiation of separator of Barrus calorimeter, in pounds per hour	0.12
6.	Moisture passing through orifice, corrected for radiation, in pounds per hour	0.09
7.	Moisture entering drip-pipe leading to the Barrus calorimeter, in pounds per hour = line 4 − line 5 + line 6	63.72

Digitized by Google

8. Total weight of steam and water passing through the three-inch pipe, in pounds per hour = line 2 + line 3 + line 4..... 744
9. Temperature of steam in twelve-inch drum N, in degrees Fahr..... 271.1
10. Correction for radiation of twelve-inch drum N, the valve M, and all piping between the valve M and the Barrus calorimeter, in degrees Fahr. = 4,550 ÷ line 2..... 7.3
11. Temperature of steam in twelve-inch drum N, corrected for radiation, in degrees Fahr. = line 9 + line 10..... 278.4
12. Pressure of steam in three-inch pipe, in pounds per square inch above atmosphere = p_1..... 80.2
13. Pressure of steam in twelve-inch drum, in pounds per square inch above atmosphere = p_2..... 0.2
14. Normal reading of twelve-inch drum = $\frac{H_1 - H_2}{0.48} + t_2$..... 283.3
15. Percentage of moisture in steam entering twelve-inch drum = (line 14 − line 11) × 0.48 × 100 ÷ latent heat at pressure p_1..... 0.27
16. Moisture in steam entering twelve-inch drum N, in pounds per hour, = line 2 × line 15 ÷ 100..... 1.68
17. Total moisture per hour in steam passing through the three-inch pipe = line 7 + line 16..... 65.40
18. Percentage of moisture in steam passing through the three-inch pipe = line 17 × 100 ÷ line 8..... 8.8
19. Percentage of total moisture removed by the half-inch drip pipe leading to the Barrus calorimeter, in per cent. = line 7 × 100 ÷ line 17. 97.4
20. Dry steam passing through three-inch pipe, in pounds per hour, = line 8 − line 17..... 679
21. Velocity of steam in three-inch pipe in feet per second = line 20 × volume of one pound of steam at pressure p_1 ÷ (3,600 × area of pipe in square feet). The exact diameter of the three-inch pipe was three and one-eighth inches..... 16.0

TABLE A.

Number of test.	Temperature of superheated steam, in degrees Fahrenheit.		Pressure of superheated steam, in lbs. per square inch above atmosphere.		Loss of superheating due to wire-drawing of steam in deg. Fahr.*	Correction for radiation. Col. 2 − col. 3 − col. 6.	Weight of steam, in lbs. per hour.	Correction for radiation by formula, 4550 ÷ weight of steam per hour.
	3-in. pipe.	12-in. drum.	3-in. pipe.	12-in. drum.				
1	2	3	4	5	6	7	8	9
1	282.9	277.9	1.18	0.27	1.1	3.9	1170	3.9
2	271.6	264.8	0.50	0.10	0.5	6.3	718	6.3
3	283.1	276.1	0.50	0.10	0.5	6.5	688	6.6

* Loss of superheating due to wire-drawing = $(t_1 - t_2) - \frac{H_1 - H_2}{0.48}$, in which,

t_1 = temperature of saturated steam corresponding to pressure before throttling.
t_2 = temperature of saturated steam corresponding to pressure after throttling.
H_1 = total heat of saturated steam before throttling.
H_2 = total heat of saturated steam after throttling.

Digitized by Google

TABLE B.

TESTS TO DETERMINE THE NORMAL READING OF THE DRUM *N*.

Number of test.	Pressure in lbs. per square inch above atmosphere.		Temperature of steam in 12-inch drum, in degrees Fahrenheit.	Weight of steam passing through apparatus, in lbs. per hour.	Correction for radiation, in degrees Fahrenheit. 4550 ÷ col. 5.	Normal reading by experiment. Col. 4 + col. 6.	Theoretical normal reading. $\frac{H_1 - H_2}{0.48} + t_2$.	Difference between experimental and theoretical normal reading, in degrees Fahrenheit.
	3-in. pipe.	12-in. drum.						
1	2	3	4	5	6	7	8	9
1	81.0	0.4	281.8	1402	3.2	285.0	284.1	0.9
2	81.4	0.3	288.5	1102	4.1	287.6	284.1	3.5
3	81.3	0.2	280.7	811	5.6	286.3	283.9	2.4
4	83.9	0.1	281.4	583	7.8	289.2	285.1	4.1
5	80.7	0.1	280.4	608	7.4	287.8	283.5	4.3
							Average,	3.0

TABLE C.

TESTS WITH SUPERHEATED STEAM TO DETERMINE THE NORMAL READING OF THE DRUM *N*.

Number of test.	Pressure in lbs. per square inch above atmosphere.		Superheating by thermometer *H*, in degrees Fahrenheit.	Temperature of steam in 12-inch drum *N*, in degrees Fahrenheit.	Weight of steam passing through apparatus, in lbs. per hour.	Correction for radiation, in degrees Fahrenheit. 4550 ÷ col. 6.	Normal reading by experiment. Col. 6 + col. 7.	Theoretical normal reading.*	Difference between experimental and theoretical normal readings, in degrees Fahrenheit.
	3-in. pipe.	12-in. drum.							
1	2	3	4	5	6	7	8	9	10
1	79.7	0.4	4.0	290.6	1365	3.3	293.9	287.2	6.7
2	80.4	0.4	3.8	290.6	1322	3.4	294.0	287.4	6.6

* Same as in Table B + degrees of superheating given in col. 4.

Digitized by Google

TABLE D.

Water Drawn from Separator Portion of Barrus Calorimeter.		Moisture Passing through Throttling Orifice of Heat Gauge.	
Lbs. per hour.	Percentage.	Equivalent in degrees Fahrenheit of superheating.	Percentage of moisture.
5	7.9	0.0	0.0
15	20.5	0.3	0.0
25	30.1	1.0	0.1
40	40.8	2.0	0.1
60	50.8	2.6	0.1
80	58.0	2.9	0.2
100	63.3	3.6	0.2
120	67.4	4.6	0.2

DISCUSSION.

Mr. Meier.—Did you try that on a vertical pipe?

Professor Jacobus.—We made no experiments with a vertical pipe.

Professor Carpenter.—We have also been making some experiments to see if we could get any light on the subject relating to the method of obtaining a fair sample of steam, and I might say a few words, just to supplement what Professor Jacobus has said. Our work was done in a little different way.

The rough sketch (Fig. 283) will give some idea of the arrangement for our tests.

A steam-pipe three inches in diameter was surrounded with a jacket of piping, shown at *J*, forming a chamber through which water might be made to flow at any desired rate.

This water was used to condense the steam in the main steam-pipe, and in this manner to provide any desired amount of moisture in the steam. The wet steam first passed upward, thence through a piece of horizontal pipe about six feet in length, thence downward through a short piece of vertical pipe, thence upward through a steam separator, *S*, then to a horizontal pipe and through a throttling orifice at *O*, thence into a discharge-pipe, leading either to the air or to a surface condenser.

Digitized by Google

Nipples of various styles, through which samples of steam for calorimetric determination would be drawn, were attached to both horizontal and vertical pipes, at points marked A, A_1, a, a_1, a_2, etc.

Glass bull's-eyes were arranged opposite each other at points marked B, in such a manner that by placing an electric light on one side, a person could plainly observe the phenomena taking place inside the pipes, from the opposite side.

As will be noticed, the peep-holes were located in both horizontal and vertical pipes. The sampling nipples were, in nearly every case, adjustable, and so arranged that a sample of steam

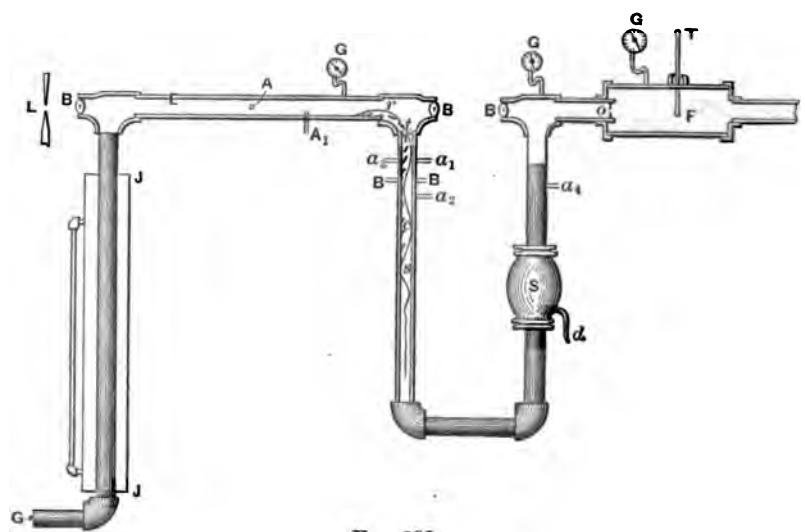

FIG. 283.

could be taken from any portion of the pipe. Various kinds were tried; some with perforations of various sizes, and others with a slit which could be set at any angle with the pipe. We tried to take photographs of the condition of the interior, but were not successful. Possibly, our light was not strong enough. We found out a good many things that were quite unexpected. As to the general results of our experiments, I will simply say here that we obtained no conclusions whatever to offer at the present time. Before the steam reached the pipes where we had the calorimeters we fixed up to vary the moisture, by the use of a jacket, which could be filled with water to any height desired. We could change the amount of moisture in the pipe by varying the amount of water in the jacket from 2 per cent. to about 30

Digitized by Google

per cent. We discharged in a superheating drum, *F*, exactly as Professor Jacobus did, and we tried to measure the quality in the discharge by the same method. We found by inspection that when the steam contained about 6 per cent. and over of water, that the components, water and steam, would not mix under any conditions, and that the water would run in a stream in the horizontal pipes, the position of this stream varying with the velocity. If the velocity was small, that water would run right along on the bottom. If the velocity was high, that water would move with a whirling motion, keeping in contact with the whole interior circumference; the interior of the pipe would apparently contain dry steam; at least, it was so that we could look right through, and we could see the water encircling the whole pipe, for a distance of six or eight feet. That condition seemed to vary with the rate of flow. The highest rate of flow that we could get was probably 250 feet per second. The range covered in our experiments was from 25 to 250 feet per second in round numbers, but I cannot give you the exact limits. In the vertical pipe we obtained some unexpected results. We found that water which would pass over in the horizontal pipe would fall in a stream in the vertical pipe, and would take different positions, according to the velocity. It evidently went over in the form of a little waterfall, which was projected a greater or less horizontal distance, as the velocity varied. We had nipples (a_1, a_2, a_3, a_4) arranged so that we could take samples from different distances from the elbow. I think we obtained the most uniform and most accurate results with a nipple provided with a slit in the top, which could be adjusted in position in the pipe. The quality of steam obtained from these various collecting nipples varied greatly, both with the position of the nipple and the depth to which it was inserted into the pipe. The paper by Professor Jacobus describes essentially our experience in obtaining samples from the horizontal pipe. The quality of the samples in the vertical pipe varied greatly with the velocity of the steam. For instance, a sample taken from a_1 would, when the velocity was high, contain an excessive amount of water; when the velocity was low it would contain a small amount. Samples taken from the opposite side of the pipe, as at a_2, would vary in the inverse manner. The stream of water was evidently projected over in a curved line, somewhat like *rs* in the sketch, varying in position with change of condition of the steam, so that our samples from the various

Digitized by Google

nipples were not uniform, and except by accident were not comparable, in any way, with the total amount of water in the steam. We also tried special arrangements for mixing the steam before drawing the sample. After trying various devices, we finally put in a very fine screen across the vertical pipe and above the collecting nipples, at *t* in the sketch, and that seemed to mix water and steam thoroughly; for, so long as that screen remained in, although it may have had some effect in reducing the pressure, it gave us very uniform and accurate samples, as checked up by condensing the whole body of steam. The screen was made of fine brass wire, the same as used for milk strainers. We were confronted by another difficulty, and this was the final cause of our not arriving at any conclusion. Professor Jacobus evidently found the same thing. In order to get at the physical quality of the steam we placed a separator on our apparatus, and then we passed the remaining steam through a throttling orifice opening into a large drum, practically as Professor Jacobus has shown, in order to superheat the total sample, and in this way obtain steam which contained no water whatever. We found, to our surprise, that we could superheat 30 to 40 degrees by throttling when this drum was half full of water.

We found that steam containing a large amount of water, say 10 to 20 per cent., would pass through the orifice *O* into the drum *F*, without mixing with the steam to any great extent, or sufficiently to prevent it being superheated by throttling.

We found that our steam in the drum, as determined by the principle applying to the throttling calorimeter, contained less than ½ of 1 per cent. of moisture, whereas, from other data, we knew that it contained many times that amount.

I may say that our experiments are not completed, and we hope to obtain in the future something definite and conclusive regarding this matter. Our present belief is, that if steam contains a great deal of moisture it is nearly impossible to draw out a fair sample; that if it contains only 2 or 3 per cent. our present methods of sampling are fair ones, and give reliable results. Our experience leads us to believe that the throttling calorimeter tends to show the high quality of the steam, and that it is not as reliable as the steam-jacketed separating instrument.

Mr. William Kent.—I would like to ask Professor Jacobus, if he had a boiler test to make and was asked to report upon the

Digitized by Google

percentage of moisture in the steam delivered from the boiler, how he would go about getting it?

Professor Jacobus.—There is only one way to obtain the exact amount, provided the steam is to be used by an engine, and that is, to remove the moisture by means of a separator, or by means of a drip pipe, and weigh it. If the steam is to be wasted, or is to be used at a low pressure, the whole amount delivered by the boiler could be throttled, and the amount of moisture in it determined by the amount of superheating after throttling.

If a separator is used in the main pipe, then we can weigh the amount of moisture discharged from the separator, and make tests with a calorimeter to determine if the steam leaving the separator is practically dry. If the calorimeter indicates no moisture, and no drip water can be obtained from the bottom of the pipe, at a point where it would be present should it settle out of the steam, then we would know that the steam was dry. If there were conditions regarding velocity similar to those which existed in my experiments, a drip pipe placed in the proper position in a horizontal pipe might be relied on to remove all the moisture which passed the separator, and that this was the case could be checked by means of a calorimeter.

Prof. W. F. M. Goss.—I will confess that my conception of the actual condition of moisture in steam has been under revision for several years. It was not so long ago that I believed in fog and mist of a very dense kind. The developments of the last few years, however, have justified the belief that in any mixture of steam and water in a pipe, the steam is present as steam, and the water as water. The paper confirms this belief.

A few weeks ago I had an opportunity to view the interior of a Babcock & Wilcox boiler when it was generating steam under pressure, and what I saw in the boiler agrees with what Professor Jacobus has found in the pipe. The water, as it came up from the headers, presented a smooth white surface. Its appearance was that of small white beads in rapid motion. There were beads of water which were sent up above the general level of the surface, and occasionally these would ascend to a considerable height, but they were always of considerable size. There were no finely divided particles of water to be seen, nothing approaching the appearance of a mist.

The paper indicates that it is practically impossible to get a fair sample of steam from a horizontal pipe. I do not see that

Digitized by Google

this can be done. Moreover, I believe that it is almost as difficult to obtain such a sample from a vertical pipe. I have had occasion to observe the jet of exhaust steam in the smoke-box of a locomotive, the front of the smoke-box being open, and the speed of the engine being about thirty miles an hour. All around the outside of the jet there could be seen a thin, lace-like film of water, extending upward from the exhaust-tip for a distance of $\frac{1}{2}$ or $\frac{3}{4}$ of an inch, the upper edge being ragged, and its outline constantly changed. The observations were repeated a number of times, under different conditions; the film of water was always there. Its presence indicates that, in a vertical pipe, a large portion of the moisture which may be present with the steam creeps along as water, in contact with the walls. It is for this reason that I think it difficult to get a fair sample of moist steam, even from a vertical pipe.

Mr. Daniel Royse.—I should like to ask Professor Goss what the pressure was in the Babcock & Wilcox boiler.

Professor Goss.—The pressure was light, about 10 pounds.

Mr. E. J. Willis.—It is the modern meteorological theory that water vapor only condenses upon a surface. In other words, no matter how saturated the atmosphere becomes, its water only condenses upon an exposed surface. On the earth this condensation is dew. Aloft, condensation occurs on the microscopic particles always present in our atmosphere, and thus forms clouds. When these particles of mist unite they form rain, and each drop of rain brings down with it the motes which form its nucleus. So thoroughly does the bacteriologist rely upon this inability of water vapor to condense except upon these microparticles, that he bases upon this principle the method of determining the number of bacteria and other micro-organisms present in the atmosphere.

We are so accustomed to see steam exhausting and condensing on these ever-present motes (thus forming the white puffs which we associate with condensation) that we fail to realize that such conditions do not exist in our boilers, pipes, and cylinders. For steam is the greatest of sterilizers, and the first blast frees them of all motes. In these, therefore, condensation occurs only on the exposed interior surfaces, and, trickling down them, follows such courses as may be prescribed by gravity and the mechanical force of the steam current.

Mr. D. L. Barnes.—Unless heat is taken from the water it cannot

Digitized by Google

condense, and if the heat is taken from the water it will condense, whether motes are present or not. The whole subject seems to be a little involved. I think we mix up the water which is entrained from the boiler with the water which is made by condensation in the pipe. I have had this problem to deal with in the case of locomotives. I put the calorimeter right where the steam comes out of the boiler, before it had an opportunity to come into the pipe, and I have had very good results. I must say that we do not very often find water in the steam.

To measure the water going into an engine is not such a difficult matter as it may seem. As Professor Jacobus has described, one can get the water running along the bottom of the pipe by a separator, and the water in the steam can be found by the calorimeter, with the pipe to the calorimeter projecting into the interior of the steam-pipe about ½ inch or more. When one knows these facts and the steam used per minute one has some foundation for calculating the dryness of the steam.

Professor Carpenter.—We very carefully followed Mr. Barnes's directions for putting the calorimeter in the pipe. The result was that when we had steam, 4, 5, 6, or 7 per cent. wet, we could not get over ½ of 1 per cent. of moisture in our calorimeter.

*Professor Jacobus.**—Professor Carpenter has presented the results of valuable experiments and observations, all of which tend to verify, in a general way, the results arrived at in my experiments. I do not consider, however, that his belief—"if steam contains only 2 or 3 per cent. of moisture our present methods of sampling are fair ones, and give reliable results"—is correct, or is warranted by the data and observations which he has set forth. If Professor Carpenter wishes to maintain this position he should present the experiments on which he has based his belief, and these experiments should cover all practical conditions in regard to velocity of flow, etc.

We experienced one of the difficulties which Professor Carpenter found with the superheating drum, but not the other. He states that with 30 to 40 degrees of superheating water could be drawn from the lower portion of the drum into which the steam passed after being throttled. This was the case with our apparatus, as I stated in the discussion of my first paper on this subject, presented at the New York meeting,† but the action was

* Author's closure, under the Rules.

† *Transactions*, vol. vxi., p. 465.

Digitized by Google

not so marked as has been found by Professor Carpenter. When the temperature of the steam in the drum was about 220 degrees, there was a slight drip of water from the lower portion of the drum, and experiments made to check the accuracy of the throttling and superheating principle, as applied to the drum, showed that the percentages of priming were correct to within $\frac{1}{8}$ of 1 per cent. up to nearly this limit.

These experiments were made by weighing the amount of water injected in the steam, and were described in my first paper. We arranged to have the drum placed in a vertical position, admitting steam at the lower end, in order to more thoroughly mingle the steam and water when the moisture approached the maximum that could be handled by the throttling principle. The use of baffle plates, similar to those which we have employed in tests made on ammonia vapor some years ago, was also contemplated. A review of the calibration of the drum showed, however, that the results were correct to within $\frac{1}{8}$ of 1 per cent. up to nearly the point at which a drip of water appeared at the drum, and as all the results to which we attached importance were those in which the percentage of priming was small, we did not make the above changes.

Another precaution which we observed was to measure the temperature of the steam on leaving the superheating drum, at a point where it was thoroughly mingled by being brought to a high velocity in passing into the exit pipe. The thermometer which was used for this purpose is marked Q in the sketch of the apparatus.* The readings of this thermometer agreed with those taken by the thermometer placed in the superheating drum, when allowance was made for radiation.

We did not find that an excess of moisture—10 to 20 per cent., as quoted by Professor Carpenter—could pass through the throttling valve without mixing with the steam to any great extent, or sufficiently to prevent it being superheated by throttling; and even had this been the case it would not have introduced any error, because the excess of moisture would have appeared at the drip pipe in the bottom of the drum, and when there was a drip at this point the reading of the drum was not relied on.

There was a difficulty which we encountered in our first tests with the superheating drum which has not been mentioned by Professor Carpenter. When we started with superheated steam,

* See sketch and description of apparatus, *Transactions*, vol. xvi., p. 464.

Digitized by Google

and injected a weighed amount of water so as to produce a certain percentage of moisture in the steam, and afterward removed the moisture by means of a separator, the temperature of the drum into which the steam leaving the separator was passed was sometimes higher than the theoretical normal reading. In other words, on applying the theoretical formula the quality of the steam would be over 100 per cent. This would indicate superheating, but a thermometer placed in a mercury well inserted in the steam-pipe near the throttle valve registered the temperature corresponding to saturated steam. At first we thought that the difference, which in some cases amounted to nearly 10 degrees Fahr. of superheat, was caused by a difference in the state of aggregation of the steam, which, having once been superheated, and correspondingly expanded, did not return to the density of steam which had not been superheated. This view was, in a measure, substantiated by special experiments, which were made by furnishing the apparatus with steam superheated in one case, and not superheated in another.

When steam which was not superheated was furnished to the apparatus the temperature of the drum did not exceed the theoretical normal reading for dry steam. To obtain steam which was not superheated a special water-glass was attached to the boilers, and the water level was raised until superheating disappeared.

To make one of the special experiments we started with the water level of the boiler at the ordinary height, and therefore with superheated steam. Water was injected into the steam in a fine spray, and the excess was removed by the separator, placed just before the throttling valve leading into the superheating drum. It was then found that the thermometer in the drum would sometimes indicate 290 degrees or more Fahr., with steam at 80 pounds pressure, and with no superheating indicated by a thermometer placed in an ordinary mercury well inserted in the steam main near the throttle valve.

The theoretical normal reading for the back pressure which existed in the drum was about 283½ degrees Fahr.

The water level was then raised in the boiler, and a short time after the steam furnished by the boiler had lost its superheat, the reading of the superheating drum would fall to nearly that indicated by theory, or 283½ degrees Fahr. This experiment was repeated a number of times, with the same result.

Experiments were then made with small calorimeters, with

Digitized by Google

similar results. We were not, however, satisfied, and inserted a thermometer with an unprotected bulb in the steam-pipe just before the point at which the steam was throttled before passing into the superheating drum. This thermometer passed through a stuffing-box, and was held so that the high-pressure steam could not force it outward.

The reading corresponding to saturated steam at 80 pounds pressure, which was the pressure used in the tests, was determined when in position before and after each test. It was found that superheating would be indicated by this thermometer for a considerable time before it would be by a thermometer placed in a mercury well, and it was found that much of the effect, that we at first thought was due to a difference in the state of the steam, was really caused by superheating, which thermometers placed in the ordinary forms of wells failed to indicate; and that this superheating existed, notwithstanding the fact that as high as 10 per cent. of water had been injected and removed by the separator.

It was after making these experiments that the apparatus shown on page 459 of my first paper was devised, the experiments on which proved that there was a difference of only three degrees of superheat after throttling for steam which was just at the point of superheating, and was, therefore, of the maximum dryness, and for steam which was slowly condensing. This difficulty delayed us for over one month, during which the most of my time was spent in personal observation, and it is for this reason that I described it in detail, so that others may not have to go over the same ground.

The statement is made that a throttling calorimeter tends to give too high quality of the steam, and is not as reliable as the steam-jacketed separating calorimeter. We should like very much to see the experiments on which this statement is based, as it is not in conformity with our experience. If a throttling calorimeter is used by an inexperienced person, and no corrections are made for radiation or for the readings of the thermometers, there will certainly be errors; but we have failed to find any error in the principle involved, and have shown that the results obtained, when such corrections are made, or when the normal reading is determined by experiment in the proper way, are correct to within $\frac{1}{8}$ of 1 per cent.

In determining the normal reading by experiment, care should be taken that the nipple leading to the calorimeter is placed so

Digitized by Google

that no water can trickle into it, or fall through the steam and enter it. A discussion of errors that may enter in this way was given in the paper on "Errors of Calorimeters." *

If a separating calorimeter is used, tests should be made on it to make certain that it separates all of the moisture from the steam. Mr. Barrus does this in his Universal Calorimeter, by passing the steam escaping from the separator through a throttling orifice. That the separator portion of the Barrus Universal Calorimeter is fairly efficient can be seen by observing the figures given in the Appendix of this paper, which show that with 5 per cent. of moisture in the steam entering the separator the steam that left it was dry; whereas, with 60 per cent. of moisture entering there was $\frac{1}{8}$ of 1 per cent. of moisture in the steam which passed from the separator.

The observations of Professor Goss in regard to the method in which water boils in a Babcock & Wilcox boiler are interesting, and, as he says, tend to bear out the theory that steam exists as steam, and water as water.

Mr. Barnes states that the water in the steam can be found by a calorimeter, with the pipe to the calorimeter projecting half an inch or more into the interior of the steam-pipe. In some cases we have found that the water will enter a nipple which projects a short distance upward into a horizontal pipe, apparently on account of the water splashing upward on striking it; so that in general it would be well to insert the nipple far enough to prevent such an action, or to employ a nipple passing through a stuffing-box, as was done by Professor Denton, so that it can be adjusted to all positions across the pipe.

* *Transactions*, vol. xvi., p. 460.

Digitized by Google

DCLIII.*

A NEW COAL CALORIMETER.

BY R. C. CARPENTER.
(Member of the Society.)

DURING the last year we have had in use in the laboratories of Sibley College an instrument for determining the heating value of coals, which may be of interest to members of the Society, and which is described in the following paper.

The general appearance of the instrument is shown in Fig. 284; a sectional view of the interior part is shown in Fig. 285, from which it is seen that, in principle, the instrument is a large thermometer, in the bulb of which combustion takes place, the heat being absorbed by the liquid which is within the bulb. The rise in temperature is denoted by the height to which a column of liquid rises in the attached glass tube.

In construction, Fig. 285, the instrument consists of a chamber, No. 15, which has a removable bottom, shown in section in Fig. 285, and in perspective in Fig. 286. The chamber is supplied with oxygen for combustion through tube 23, 24, 25, the products of combustion being discharged through a spiral tube, 29, 28, 30.

Surrounding the combustion chamber is a larger closed chamber, 1, Fig. 285, filled with water, and connecting with an open glass tube, 9 and 10. Above the water-chamber, 1, is a diaphragm, 12, which can be changed in position by screw 14, so as to adjust the zero level in the open glass tube at any desired point. A glass for observing the process of combustion is inserted at 33, in top of the combustion chamber, and also at 34, in top of the water chamber, and at 36, in top of outer case.

This instrument readily slips into an outside case, which is nickel-plated and polished on the inside, so as to reduce radiation as much as possible. The instrument is supported on

* Presented at the Detroit meeting (June, 1895) of the American Society of Mechanical Engineers, and forming part of Volume XVI. of the *Transactions*.

Digitized by Google

strips of felting, 5 and 6, Fig. 285. A funnel for filling is provided at 37, which can also be used for emptying, if desired.

The plug which stops up the bottom of the combustion chamber carries a dish, 22, in which the fuel for combustion is placed; also two wires passing through tubes of vulcanized fibre, which are adjustable in a vertical direction, and connected with a thin platinum wire at the ends. These wires are con-

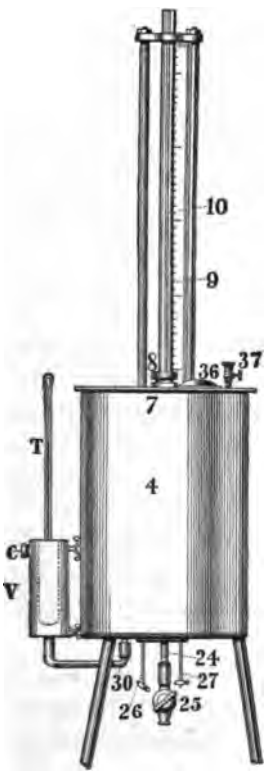

FIG. 284.

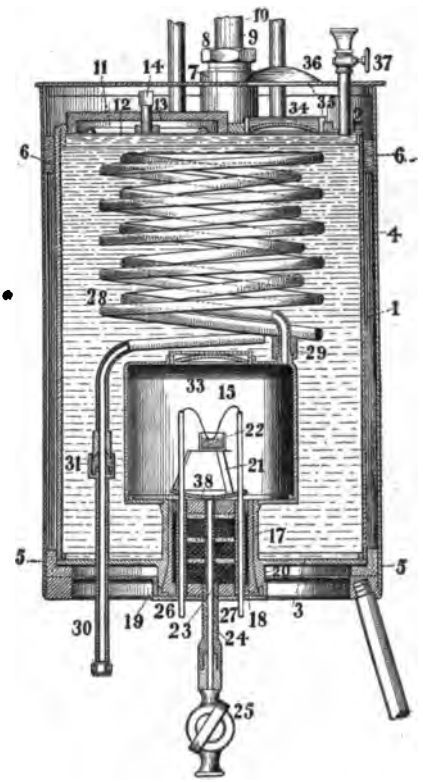

FIG. 285.

nected to an electric current, and used for firing the fuel. On the top part of the plug is placed a silver mirror, 38, to deflect any radiant heat. Through the centre of this plug passes a tube, 25, through which the oxygen passes to supply combustion. The plug is made with alternate layers of rubber and asbestos fibre, the outside only being of metal, which, being in contact with the wall of the water chamber, can transfer little or no heat to the outside.

Digitized by Google

The discharge gases pass through a long coil of copper pipe, and are discharged through a very fine orifice in a cap at 30.

The instrument has been so designed that the combustion can take place in oxygen gas which remains under constant pressure, regardless of the rate of combustion. In practice we have found that very excellent results have been obtained with pressures of 2 to 5 pounds per square inch, and these have been commonly used in our determinations.

FIG. 286.

Two instruments have been built at the present time, which differ from each other somewhat in detail, but principally in dimensions. The first instrument held about 1 pound of water, and was intended for use with about 1 gram of coal. In that instrument the entire bottom of the water chamber was removable, and the whole of the combustion chamber. This form, while giving fully as good results as the one described, was more likely to leak, and, consequently, was difficult to keep in good condition. The first form built employed an adjusting piston to regulate the initial reading of the water column, which, possibly, may have been as good as the diaphragm used at present.

The instrument described, which is of later design, holds about 5 pounds of water, and is large enough for the consumption of 2 grams of coal.

The temperature of the discharged gas was, in our first experiments, measured by a thermometer in the attached cup *V*, Fig. 284; later experiments prove this unnecessary, and the form in Fig. 285 has been finally adopted, as being simpler to construct and more convenient to use. It is quite evident that this method of measuring the heating value of fuels will be also applicable to a bomb calorimeter, but it is very doubtful if such a construction will show any increase of accuracy over the form described, while it is quite certain to be more difficult to use.

Before the instrument was constructed, it was the intention to calibrate the scale so as to give the results directly in heat units; and for this purpose a thermometer with cup and special

Digitized by Google

appliance for stirring was to be employed. It was afterwards found out that the value of the scale could be obtained much more simply by burning different weights of pure carbon, and thus obviate any necessity for complicated corrections due to the specific heat of the various parts of the instrument.

This method is not, however, a novel one, having been employed by Hempel,* the German authority on this subject, and also by Berthelot,† with the bomb calorimeters. Hempel recommends for this purpose the use of the carbon obtained by burning recrystallized sugar; but we have obtained very uniform and consistent results by using a coke from which all volatile matter had been driven off, and making corrections for the ash which was left as a residue, after the burning.

By the combustion of different weights a calibration curve, coördinating B. T. U. and weights of fuel, is obtained, which has been essentially a straight line for the two instruments described.

In case there is any change in the character of the heating or absorbing surfaces, a new calibration can readily be made at any time by preserving some of the coke first used in calibration.

The value of 1 pound of pure carbon has been determined so accurately, and repeated so many times, that it provides a very convenient and accurate standard. This value is ordinarily taken as 8,080 calories, or 14,540 B. T. U. The latest value, as determined by Berthelot, is 8,136.6 calories, 14,646 B. T. U., a number above $\frac{3}{4}$ of 1 per cent. higher than determination by Fabre and Silbermann and various other observers.

PROXIMATE ANALYSIS OF COAL.

We have found it quite easy to make a proximate analysis of one sample during the time that another is burning in the calorimeter. Many of the operations which are necessary in the one case are helpful in the other, and the two results give, in a measure, a check on each other.

The method of making a proximate analysis has been presented to the Society in a paper by Mr. Eckley B. Coxe, Past President of the Society.‡

* *Gas Analysis*, translated by L. M. Dennis.
† *Traité pratique de Calorimetrie Chimique.*
‡ President's Address, vol. xv., p. 37, No. 557.

Digitized by Google

The method which we have employed has been very similar to that described, although it has been modified somewhat to suit our conditions. The method which is employed to such an extent for the proximate analysis of fuels in chemical laboratories, that it may be considered in many respects a standard, is given in the following concise directions.

"DIRECTIONS FOR PROXIMATE ANALYSIS.*—COAL AND COKE."

The sample should be finely pulverized in a mortar, and then thoroughly mixed.

Moisture.—Place the weighed sample (about 1 gram) in a porcelain crucible, and dry in an air-bath for one hour, at a temperature between 105 and 110 degrees C. Weigh as soon as cool. Loss is moisture.

Volatile Matter.—Weigh about 1½ grams of the undried pulverized coal, place it in a platinum crucible and cover tightly. Heat it for 3½ minutes over Bunsen burner (bright red heat), and then immediately, without cooling, for 3½ minutes over blast lamp (white heat). Cool and weigh. Loss, less the moisture, is volatile matter.

Fixed Carbon.—If a coke be formed in the preceding operation, make a note of its properties, color, firmness, etc., then place the crucible, with cover removed, in an inclined position, and heat over Bunsen burner until all carbon is burned—*i.e.*, to constant weight. The combustion may be hastened by stirring the charge from time to time with a platinum wire. Difference between this weight and last weight is the fixed carbon.

Ash.—Difference between last weight and weight of crucible is the ash.

TOTAL SULPHUR IN COAL AND COKE.

Prepare a fusing mixture by thoroughly mixing two parts calcined magnesia with one part anhydrous sodium carbonate. Determine the sulphur in the mixture.

Thoroughly mix 1 gram of the finely pulverized coal with 1½ grams of fusing mixture. Heat over an alcohol lamp, in an open platinum or porcelain crucible, so inclined that only its lower half may be brought to a red heat. The crucible should not be over ½ or ⅔ full, and the heat should be gentle at first, to avoid loss

* See *Crooke's Select Methods*, 2d edition, pp. 595–607.

Digitized by Google

upon the consequent sudden escape of volatile matter, if present in large amount. Raise the heat gradually (it must not at any time be high enough to fuse the mixture), and stir the contents of the crucible every five minutes with a platinum wire. The oxidation of the carbon is complete when ash becomes yellowish or light gray (about one hour). Cool crucible, add 1 gram pulverized NH_4NO_3 to the ash, mix thoroughly by stirring with a glass rod, and heat to redness for five to ten minutes, the crucible being covered with its lid.

Cool, digest the mass in water, transfer the crucible contents to a beaker, rinse out the crucible with dilute warm HCl, dilute solution in beaker to about 150 c. c., acidulate with HCl, and heat almost to boiling for five minutes. Filter and precipitate the sulphuric acid in filtrate by $BaCl_2$ in usual manner.

Phosphorus.—If present, it will be found in the ash. Ignite about 10 grams of the coal in a large platinum crucible, and determine the phosphorus in the ash in the usual manner. (See Fresenius, p. 741.)

In the mechanical laboratory it has not been practicable to determine, during the past year, either the sulphur or phosphorus. These quantities are not usually of importance, unless the coal is destined for certain uses, where these ingredients would be harmful, and as the determination would require much more time than that of all other processes in the proximate analysis, and including the calorimetric determination of heating value, it was not considered advisable to introduce it.

The operation followed in the mechanical laboratory in the proximate analysis of coal has differed principally from that described, first, in the use of larger samples; and second, in the use of porcelain instead of platinum crucibles. The use of larger samples was undertaken principally for the reason that we could weigh, with sufficient accuracy for engineering purposes, on a Brown & Sharpe scale reading to ten-thousandths of a pound, and were not obliged to resort to chemical balances.

Where the quantity was as small as 1 gram, the weights had to be taken on delicate chemical balances. These balances, while very accurate, are extremely sensitive, and require the utmost care and patience in order to get results which are correct within 1 per cent.

In the substitution of porcelain for platinum crucibles a great many experiments were made, and it was found that in

Digitized by Google

every case the results obtained with the porcelain crucibles were substantially in accord with those given by the platinum, and the writer could not find, on consultation with chemists at the university, that there was any theoretic objection to the use of porcelain. In fact, it was generally regarded as superior, for several reasons, of which may be mentioned, less first cost and less liability of injury by the fusing of particles in the coal when over the blast lamp. In the determination of the volatile matter the same general directions were followed as given, but instead of subjecting the fuel to the heat for any definite length of time, the conclusion of the operation was known by change of color in the flame. The flame would be yellow or yellowish so long as any volatile matter remained; it would then die down, and when the carbon commenced to burn would be decidedly blue. The operation was always stopped when the blue flame appeared. The crucible employed is made of Royal Meissen porcelain, and provided with cover. It has a capacity of half an ounce, and costs seventeen cents. During the operation the cover is fitted snugly in place, and the gases escape around the edge, and are kept burning.

The percentage of ash is determined by weighing the residue which remains after combustion in the calorimeter. The burning of the fixed carbon requires a long time when performed in the air, but in the calorimeter the operation is performed very quickly and very accurately, so that the total time required to determine the proximate composition and also the heat values of a sample of coal need not exceed twenty or thirty minutes, for a person familiar with the operations.

METHOD OF USING THE CALORIMETER.

The method of using the calorimeter, supposing that oxygen is available for combustion, and that an electric current can be obtained for lighting the coal, is as follows:

1. Select an accurate sample by a system of quartering, which shall commence with a very great amount, if possible, and finally terminate with a very small fraction of a pound. (See paper by Mr. Coxe.)

2. Reduce to powder by grinding in a mortar, or in a mill, as explained by Mr. Coxe, sufficient coal for several samples.

3. Introduce the sample into a small porcelain or asbestos cup

Digitized by Google

and weigh accurately. This operation will usually have to be performed on a fine chemical balance.

4. Introduce the sample into the calorimeter, (*a*) start the oxygen gas flowing; (*b*) fire the charge, which should be done by pressing on a key; (*c*) at instant coal is lighted, throw off the current and note the reading of the scale. By noting this, after firing, the correction for heat from electric wire is made by simple subtraction.

5. Watch the combustion, which will usually require about five minutes for each gram of coal, and when completed note the scale reading. The water on the scale will rise about 15 inches for the amount of coal usually burned.

6. To correct for radiation note the amount the water in the column has fallen for the same time as required for combustion; add this to the former reading to get the total number of heat units.

7. Divide the value as shown on the scale by the weight in pounds of the sample burned. The result will be the value in B. T. U. of 1 pound of coal.

8. Remove the dish in which combustion took place, weigh it carefully with and without contents. If the combustion has been perfect the difference of these weights gives the ash.

Wipe combustion chamber dry for another determination.

9. To prepare for another determination, remove the calorimeter from the outside case, and immerse in cold water, care being taken to prevent any water entering the oxygen tubes or combustion chamber.

This method is preferable to emptying the calorimeter and adding fresh water each time, since the air, which is always present in water, will affect the results, and is a difficult element to remove. The operation of cooling takes but a few minutes and is easily performed.

The cup in which combustion takes place in all determinations at Sibley College has been, up to the present time, made by wrapping sheet asbestos around the end of a cylinder about one-half inch in diameter, the cup shape being preserved by gluing. This cup was then introduced into the fiercest flame of a blast lamp until all combustible matter was burned out, and until no further change in weight could be made by heating. This cup has, so far, proved very successful; its non-conducting qualities has permitted combustion to take place up to its very edge,

Digitized by Google

and no trouble whatever has been experienced in securing perfect combustion, with a powdered sample either of anthracite coal, coke, or bituminous coal.

The preparation of a sample for combustion has been the subject of a good deal of experimentation. For a long time we followed the method recommended by Hempel, which consists in first powdering and then re-pressing in a mould. This method worked well with bituminous coal, but was a failure with anthracite; besides, it involved a good deal of labor.

EXPERIMENTS WITH OTHER FORMS.

The methods of coal calorimetry have been the subject of almost constant experiment in the laboratories of Sibley College for the past three years, but until the past year the instruments employed were those which have been long in use; it may be a matter of some interest, however, to give a synopsis of what has been done, although it cannot be claimed that much has been accomplished.

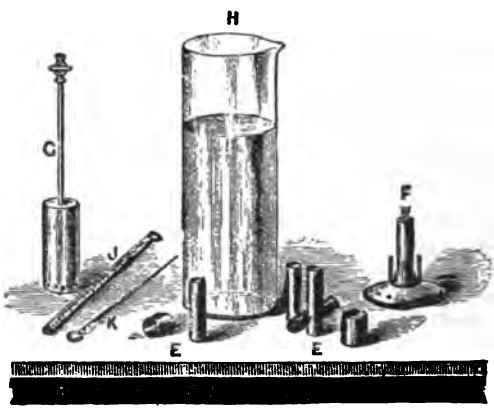

FIG. 287.

The investigations made, in the general charge of the writer, were subjects of graduation theses of C. L. Hoyt and J. F. MacGregor in 1891–2, of H. G. Geer and W. L. Garrels in 1892–3, of C. H. Bierbaum, M.E., in graduate work in 1893–4.

The instruments tried, regardless of order, have been as follows:

1. Thompson's calorimeter, shown in Figs. 287 and 288. This instrument provides an approximate method of determining

Digitized by Google

heat value which is often quite satisfactory with bituminous coal, but, so far as the writer's experience goes, is of no value with anthracite coal.

It consists (Fig. 287) of glass jar, *H*, graduated to contain 1,934 grams of water (twice latent heat of steam at 212 degrees). In this are inserted, 1, a thermometer to indicate rise of temperature; 2, a combustion chamber, *G*.

The combustible, 2 grams, is powdered and mixed as thoroughly as possible with 22 grams of a very dry mixture of 3 parts potassic chlorate with 1 part of nitrate, and introduced into a small copper furnace, *F*, provided with a fuse.

The furnace, *F*, is placed beneath the combustion chamber, *G*, and fired, the gases escape through holes in the bottom of the combustion chamber and rise through the water, escaping at the top, somewhat as shown in Fig. 288. In order to get a more intimate mixture of the escaping gas and water, we used baffle plates on the combustion chamber, and also very fine wire-gauze netting. Instead of firing with a fuse, we fired with an electric current.

CALORIMETER IN ACTION.
FIG. 288.

With this instrument the rise in temperature of the water at beginning and end of experiment, in degrees, gives the evaporative power of the coal in pounds of water from and at 212 degrees, provided the water and coal are used in the proportions stated. If other proportions are used the results will need to be worked out by the methods employed with other calorimeters.

2. Berthelot's bomb calorimeter, Hempel's modification. This instrument has been used in Germany by the chemist Hempel with great success, and appears to the writer to be the most promising of the *bomb* calorimeters. All the bomb calorimeters, including the original, as made by Berthelot, and modifications, as made by Mahler, Hempel, and Donkin, consisted of a very strong closed vessel, *the bomb*, into which the fuel is placed, and which is then charged with oxygen under a very great pressure (8 to 15 atmospheres). The fuel is fired with an electric spark, and the combustion takes place with great excess

Digitized by Google

of oxygen. During combustion the bomb is placed in a vessel filled with water, which is kept thoroughly agitated, and the rise in temperature noted by a very delicate thermometer.

The value of the fuel burned is determined from the rise in temperature of the water, taking into account its weight, and also the weights and specific heats of all parts of the calorimeter. The latter operation is a very delicate and complicated one, requiring the utmost skill on the part of the observers, and the most delicate instruments for obtaining temperatures and weights.

The bomb built by Berthelot was lined with platinum, that built by Mahler with a porcelain enamel, that by Hempel is not lined at all. Hempel made a large number of investigations to determine the loss of heat due to oxidization of the inside of the calorimeter, and came to the conclusion that the loss due to this cause was unappreciable, and much less than unavoidable errors due to weighing and measurement of temperature.

Mahler collects the nitric acid formed as a result of combustion, and deducts the heat liberated in this combination. As this seldom exceeds $\frac{1}{100}$ of 1 per cent. it seems an entirely unnecessary proceeding, especially for engineering purposes.

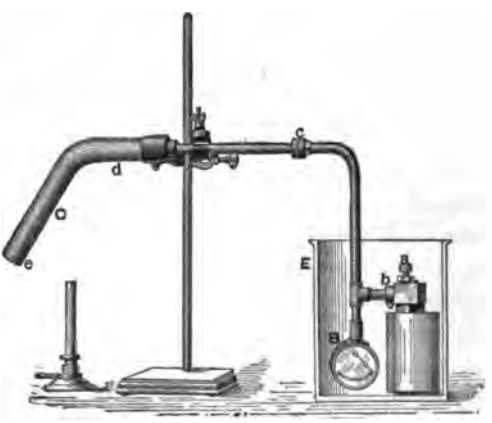

FIG. 289.

The oxygen can be purchased in cylinders under pressure, or it can be manufactured as required. Hempel attached a crucible, *C* (Fig. 289), to his calorimeter, and made the oxygen as required, by heating a mixture of dioxide of manganese and chlorate of potash in equal parts. The instrument is shown,

Digitized by Google

with crucible for making oxygen attached, in Fig. 289. Before making the oxygen the fuel is inserted in the calorimeter, the crucible connected, and the oxygen made until a pressure of 150 pounds was shown on the attached pressure gauge. Crucible and gauge are then removed, a cock, not shown, being closed to prevent escape of oxygen.

The bomb is then placed in a vessel containing water, and provided with stirring apparatus and delicate thermometers.

A section of the bomb and enlarged view of the cap, with connections for firing, are shown in Fig. 290.

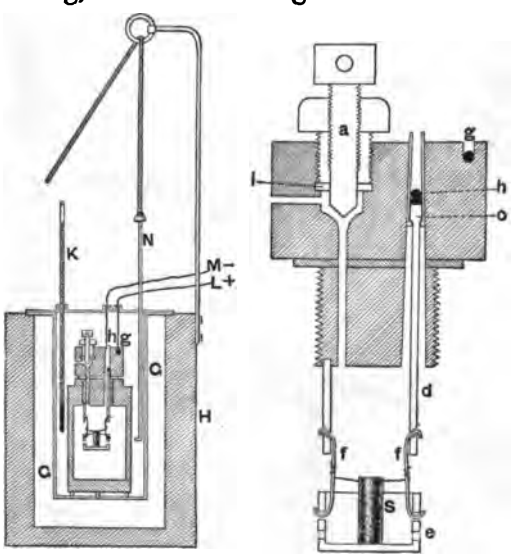

FIG. 290.

A sectional view of Mahler's calorimeter, with detached battery for firing and tank filled with compressed oxygen, is shown in Fig. 291.

A form of calorimeter very much like the Mahler is shown in Fig. 292, and has recently been made by Bryan Donkin & Co., London, England.

The only objections to the bomb calorimeter arise from the tediousness of the operations, and the great delicacy with which all operations must be performed. The extremely high pressures to which the instruments are subjected render them very liable to leak, and great care must be exercised in putting the parts together, also in perfectly cleaning the apparatus after previous operations.

Digitized by Google

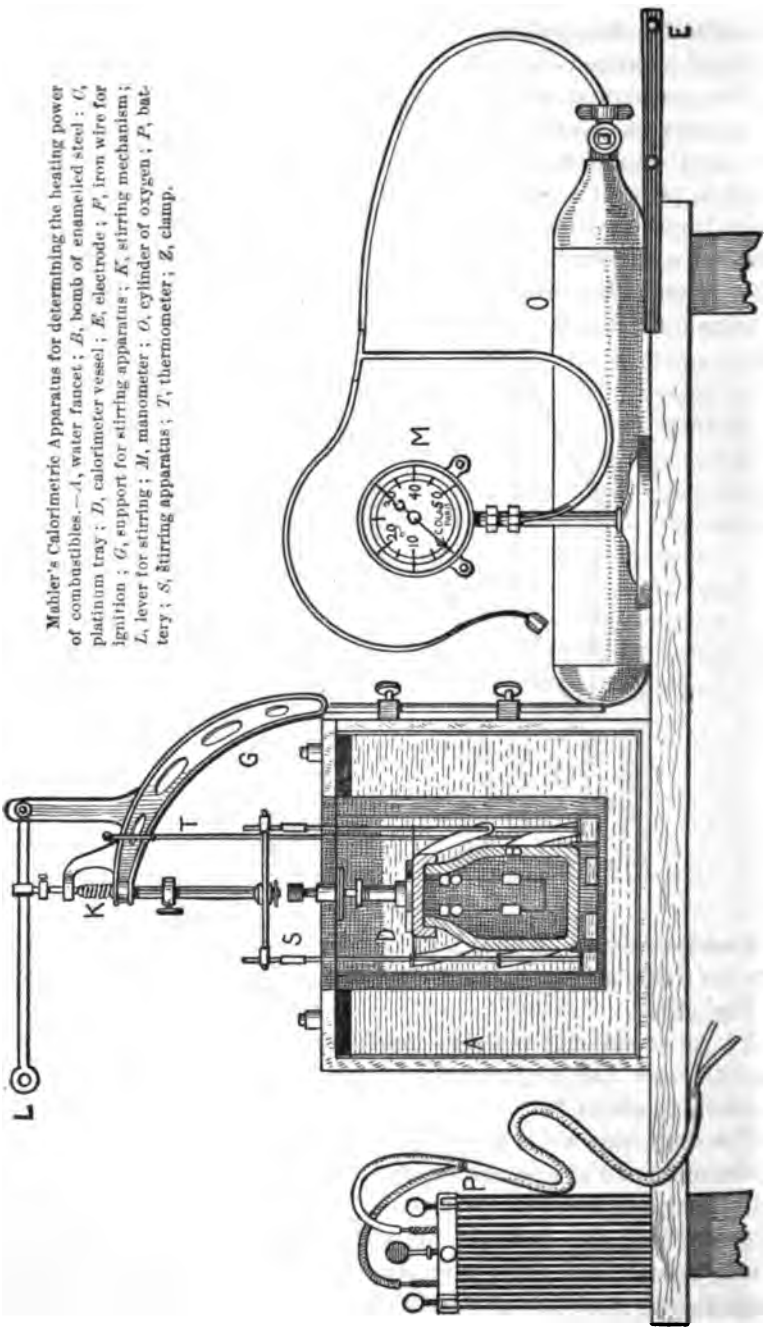

Mahler's Calorimetric Apparatus for determining the heating power of combustibles.—*A*, water faucet; *B*, bomb of enameled steel: *C*, platinum tray; *D*, calorimeter vessel; *E*, electrode; *F*, iron wire for ignition; *G*, support for stirring apparatus; *K*, stirring mechanism; *L*, lever for stirring; *M*, manometer; *O*, cylinder of oxygen; *P*, battery; *S*, stirring apparatus; *T*, thermometer; *Z*, clamp.

Fig. 291.

Digitized by Google

Other instruments have been tried. One form, shown in Fig. 293, was copied, on information supplied by Mr. L. S. Marks, from one used by Prof. Robert Smith, of Mason's College, Birmingham, in some determinations of heating values of coal. The form shown has details * as arranged by C. H. Bierbaum, M.E.

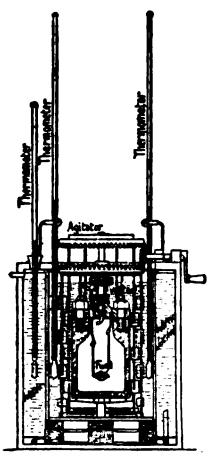

FIG. 292.

The instrument is a modification of the Thompson calorimeter, but the fuel, instead of being burned in a chemical which disengages oxygen, is burned in oxygen gas under slight pressure.

It consists of a bell glass, *E*, supplied with a glass tube at top, through which pass the oxygen for combustion and also the wires for carrying the electric current for firing the fuel. The bell glass can be raised or lowered, as required, and the fuel is placed in the jar from below. The products of combustion escape through the surrounding water, as in the Thompson calorimeter, and the heating value of the fuel is determined by the rise in temperature of the water, multiplied by its weight, plus the water equivalent of the calorimeter. That, divided by the weight of coal burned, gives the heating value per pound.

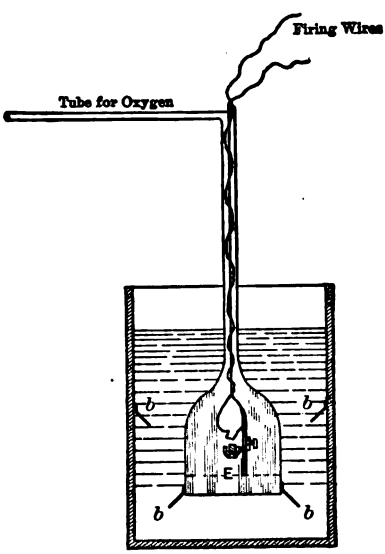

FIG. 293.

Very delicate thermometers were used, and also a stirring apparatus for mixing the water. The glass vessel, *E*, permitted the process of combustion to be seen at all times, which I consider of advantage, as we found it difficult in many instruments to tell when combustion began or closed.

* This is quite similar in method of operation to one described in vol. xiv. of *Transactions*, by Mr. Geo. H. Barrus.

Digitized by Google

Some experiments were also made on calorimeters having very large coal capacity and which were immersed in large tanks of water. One of these forms, designed by Mr. William Kent, consisted of a combustion chamber and a long coil of 2-inch copper pipe, all of which was immersed in a large tank of water during the process of combustion. This was a very promising instrument, but it was rather difficult and costly to manage, and we were never exactly sure of securing perfect combustion, with air, which had to be used, on such a large scale. There is little doubt, however, but what, under certain circumstances, this instrument might be made to give valuable results.

EXPERIMENTS MADE WITH NEW CALORIMETER.

In the educational work of Sibley College, it was rather necessary to obtain an instrument which could be handled by students without much previous training, which would not consume too much time in preparation and in using, and which would give results accurate within 1 or 2 per cent.

The requirement just stated is not met by any of the older forms of instrument described, since much skill and time are required in the preparation for use, and a great deal of complicated calculation is necessary in reducing the results. For calorimetric purposes generally, one gram of coal is burned, and this heat is absorbed in from 1,000 to 2,000 grams of water, so that the most minute errors in determining the average temperature of the water affect the results very greatly.

This is the same problem that produces such irregular results in the use of the barrel calorimeter for determining the quality of steam, as was discussed in a paper by Professor Denton.*

The difficulties required to secure, in the first place, uniform mixture of water as regards temperature are very great, and, in the second place, the methods of measuring minute portions of a degree with a mercurial thermometer must always be open to suspicion unless instruments of very great value are employed. A mistake of a single degree in measuring the average temperature of the water with calorimeters of ordinary proportions would mean an error of about 2,000 B. T. U. per pound of coal in the results. While an error of this magnitude is not likely to be made, an error one-fifth as great is quite probable.

The instrument which has been described has filled all re-

* *Transactions*, vol. x., page 373.

Digitized by Google

quirements reasonably well, and during the past year has been subjected to such handling as would best develop its defects and determine its accuracy. In using it during the past term, the students were given samples of coal whose heating values were well known, and in this way an opportunity was presented of comparing the results of inexperienced and untrained men. Such operations were repeated day after day during the entire term, each group of two students making the proximate analysis and determining the heat value as explained. The time required for both these operations rarely exceeded half an hour, and the results obtained agreed well within the expected limits of error. The instrument can readily be read to 10 B. T. U. per pound of coal, but the accuracy with ordinary handling is probably about 100 B. T. U., or $\frac{3}{4}$ of 1 per cent.*

In fact, the errors made were generally of such character that we could reasonably suppose they were principally due to mistakes in obtaining weights of the samples.

The only difficulty that has been experienced in its use has been that due to the collection of air in the top part of the apparatus. This has in some instances been difficult to remove, and has always rendered it necessary, when first starting to use the instrument, to exercise considerable care. It seems very certain, however, that a slight change in the top of the device will make it of such form that it will be impossible for air to remain after the pressure is applied, since it will be quite easy to arrange the open tube in such a manner that all air caught in the instrument will pass directly out through the tube. This, I believe, has been the only difficulty experienced with the second form of instrument, and was not noticed at all with the first, in which a piston was used instead of a diaphragm for adjusting the initial reading in the water column. For many of the details of the apparatus in its present form, the writer is largely indebted to Mr. C. E. Houghton, M.E., who has had charge of the educational work relating to it.

The following table gives the results of tests made for the heat contained in 23 samples of coal, by B. T. Flory and E. M. Gilbert, two students in the graduating class, Sibley College. These samples were, in some cases, selected especially for the purpose of analysis, and in other cases were obtained from dealers, so that the fairness of the sample cannot, in all cases,

* The scale reading for 10 B. T. U. would ordinarily be about $\frac{1}{100}$ of an inch.

Digitized by Google

be determined. At least two analyses and two determinations in the calorimeter were made of each kind of coal, and if these results differed from each other more than 1 per cent., which was very nearly the probable error of weighing, other determinations were made. In nearly every case the determinations made with the calorimeter gave results which did not differ from the average ½ of 1 per cent.

It may be said that extreme accuracy is not claimed for the instrument, but our experience would indicate that it is one convenient to use, and not subject to greater errors in results than that due to the selection of sample.

Name of Coal.	Kind of Coal.	Locality.	No.	Average moisture. Per cent.	Average Volatile matter. Per cent.	Carbon. Per cent.	Average Ash. Per cent.	Calorimeter. Value B. T. U.	Average Specific Gravity.
*Cooperstown.....	Bituminous ...	Nova Scotia...	1	1.11	30.42	64.44	4.03	15,266	1.345
Bernmut Coal w'ks	Bituminous....	Monon. Riv. Pa.	2	2.27	31.29	58.61	7.83	13,726	1.275
Reynoldsville	Bituminous....	Rey'ldsv'e, Pa.	3	1.09	34.4	69.21	5.3	14,971	1.34
Nova Scotia.....	Bituminous ...	Nova Scotia... Slope No. 2.	4	3.08	31.41	61.71	3.81	14,864	1.31
Pocahontas.....	Bituminous....	Pocahontas, Va	5	1.25	17.62	77.48	3.65	15,094	1.255
Gillespie.....	Bituminous....	Gillespie, Ill...	6	3.77	34.94	49.55	11.74	10,506	1.23
Leiseuring	Bituminous ...	Conn'sville, Pa.	7	1.93	28.71	63.26	6.1	15,005	1.34
Turtle Creek.....	Bituminous....	Monon. Riv. Pa.	8	2.11	34.22	59.45	4.22	14,150	1.28
Eureka	Bituminous....	Clear'd Co., Pa.	9	1.03	23.55	69.69	5.73	13,756	1.32
Antrim.....	Bituminous....	New Blossburg	10	1.23	18.57	69.3	10.9	13,528	1.42
Mannville Shaft...	Anthracite	Scranton, Pa...	11	1.04	5.95	85.7	7.31	12,934	1.42
Avondale.....	Anthracite.....	Scranton	12	1.28	5.89	86.68	6.15	13,051	1.44
L. V. Buckwheat..	Anthracite.....	Wilkesbarre...	13	1.34	6.42	76.94	15.3	11,801	1.31
Mt. Pleasant.....	Anthracite	Scranton.....	14	1.27	7.54	80.54	10.65	12,307	1.42
Oxford	Anthracite	Scranton.....	15	1.35	6.36	90.07	2.22	13,254	1.415
Coxe's No. 2.....	Anthracite..... Slate removed.	Drifton, Pa....	16	3.62	1.96	89.19	5.23	13,723	1.56
Coxe's No. 1.....	Anthracite..... Slate removed.	Drifton, Pa....	17	2.97	2.3	87.96	6.77	13,324	1.55
Woodward	Anthracite	Scranton, Pa..	18	3.33	3.73	79.23	13.71	12,149	1.42
No. 11, Forty-foot..	Anthracite.....	Scranton.....	19	1.12	4.99	83.98	9.91	12,903	1.415
Continental	Anthracite	Scranton.....	20	1.27	5.98	83.13	9.62	12,943	1.615
L. V. Pea	Anthracite	L. V. Pea	21	1.44	7.36	75.2	16.00	12,423	1.32
Jermyn	Anthracite	Pottsville.....	22	1.7	5.78	71.68	10.84	12,036	1.425
Cayuga.....	Anthracite.... D. L. W.	Scranton.....	23	.97	5.37	84.46	9.2	12,294	1.49

* Sample obtained from Canadian Pacific R.R.

Note.—Oxygen can be made as described for the Hempel calorimeter, or it can be purchased, compressed under great pressure, of the New York Oxygen Company.

DISCUSSION.

Prof. R. H. Thurston.—A new calorimeter is one of the most imperative needs of the mechanical engineer at the present moment. Chemical analysis, if accurately performed by skilful hands and an experienced chemist, gives results which may be taken as absolute for the purposes of the engineer; but it is

Digitized by Google

tedious, costly, and inconvenient, if not impossible, except where the facilities of a first-class laboratory are to be found. It deals with small quantities, comparatively, and is thus less certain to represent fair average quality than if dealing with larger weights. It is rarely practicable for the engineer to avail himself of it, and then, as a rule, only by sending his samples to an often distant laboratory, and submitting to all the annoyance of securing his results at second-hand, and in course of business with another party. The "bomb" calorimeter is a manageable piece of apparatus in the hands of any one who has had the training of the modern laboratory; but it implies, also, a tedious and troublesome process of determination of the calorific value of the fuel, and is subject to many possible, though perhaps small, errors. The work is usually performed by the chemist in his laboratory, and, wherever done, takes much time and a skilful and trained manipulator. The complete and exact determination of the calorific value of a single specimen may consume hours. It requires some special apparatus, and is one of those fine processes which scientific men delight in, as giving opportunity to exhibit their skill in nice measurement and ability in the minutiæ of precise checks and balances, and measures of delicate quantities.

The Berthelot bomb, whether constructed by Berthelot himself, by Hempel, by Donkin, or by Mahler, is substantially the same type of instrument; all its forms are of precisely the same value, involve exactly the same operations, and are equally tedious and troublesome. It is ingenious and simple in theory, and, in some sense, in its process of working; but it is not one of those pieces of apparatus which the engineer aspires to add to his outfit for steam-boiler trials.

It has seemed to me that the instrument here described, as constructed and used in our Sibley College laboratories, might prove to possess many advantages. It is simple, easily managed, comparatively inexpensive, is accurate, and, above all, quick in action, and gives results in minutes which require hours for their acquisition with the bomb. It has a long scale—in fact, any length desired—and this gives corresponding accuracy of readings. Where the scale can be made one or two, or more, feet long, it may be fairly inferred that all the accuracy demanded by the engineer may be assured. The instrument requires a supply of oxygen; but it employs it under low pressures, and the anxieties and risks, so far as they exist in the case of the bomb, are thus

Digitized by Google

evaded. We have had no accidents with coal, and our only explosion, a harmless one, came of the attempt of an inexperienced operator to test a sample of petroleum. The Carpenter calorimeter has become the standard apparatus of Sibley College for this class of work; and experience—a long experience now—indicates that it may be relied upon, that it is thoroughly satisfactory, and a great advance upon the older forms. A limit of accuracy, in everyday use, of one-half of one per cent., may be taken as very good indeed.

The matter assumes large importance in view of the recent developments of our methods of boiler and other efficiency determinations, where combustibles are to be tested, and some such process will, I presume, be introduced into the codes of boiler-trial adopted on both sides the Atlantic. One or more of the now standard methods of calorimetry of fuels should, in my opinion, be described and advised in our Code, and the engineer following the Standard Code will demand at once the best and simplest and most accurate methods, or he will decline to make calorimetric determinations at all. He can already use the bomb, and instructions for its use are accessible in the books of Dennis and of Berthelot. The results of our own experience would seem to indicate that none of the older methods are likely to find wide adoption among engineers in general practice. Specialists, fitting up for boiler work with all the apparatus of a modern chemical laboratory, will perhaps be able to do such work satisfactorily with the bomb.

Mr. Gus. C. Henning.—The apparatus discussed in this paper is undoubtedly one which will be a very valuable adjunct in determinations of economical values of fuels, as well as in efficiency tests of boilers. It seems to me, however, that it has not yet been calibrated in a manner which makes the results obtained entirely reliable, except under the conditions under which it was calibrated as described in the paper.

The essential conditions described in the paper under which this instrument has been calibrated are: first, that the rate of combustion was constant; second, that the rate of dissipation of heat was constant; third, that the rate of outflow of gases of combustion was also uniform.

Nothing is shown or given in the paper to prove that the apparatus will give uniform or accurate results when these three conditions vary.

Digitized by Google

As there is no agitator, the vessels and water will change their relative volumes in accordance with the rate of heat evolution and the time of passage of gases through 28, 29, 30, 31.

As long as pure C was used, the rate of combustion was uniform, and also the rate of generation of gases; these remain the same, although different quantities of C were burned, and proportionate numbers of calories, or heat units, were generated. Then, knowing the total heat units in pure C, the scale can be so divided as to give correct results for pure C.

But as soon as other fuels are used, such as oils, napthaline, or poor coals, then the rapidity with which heat is generated is quite different, and I cannot admit that the scale made for pure C holds true.

As the C burns gases are formed, which are forced through the coil, and leave by the orifice, 30. Now, when this rate of flow of gas changes, then the amount of heat absorbed by the water, or radiated from the coil and combustion chamber, varies. Of course, the thermometer *T*, Fig. 284, would be of no material use when pure C is burned, as the flow of gases would then be constant, and readings should be so if the apparatus is correct or reliable.

As total heat units in coals vary from 12,000 to 15,500 (approximately), there is so much difference that the scale on the instrument may readily give misleading results. The richer coals burn rapidly, and the gases would be driven off much more rapidly than when a lean coal is used, and this should be the cause of variations in heat determination of bituminous coal, anthracite coal, and of coke.

The rapid combustion produces higher temperatures and more rapid flow of gases, hence less time for radiation of heat to expand the combustion-chamber water; while lean coals produce lower temperatures, but allow greater length of time for flow of gases, and therefore more thorough radiation of heat. Now, without an agitator this difference may become a considerable factor.

To show how many errors can exist in a calorimeter, I would refer to a most able and scientific investigation of the Berthelot-Mahler calorimeter, by Dr. A. M. Mayer, in the *Stevens Indicator* of April 15, 1895.

I do not wish to detract from the able work reported by Professor Carpenter, but I do think that further tests should be made to determine the action of this calorimeter when different kinds of

Digitized by Google

coal are used. It seems to me that this can only be done by such investigation as that by Dr. Mayer, and should be done on each individual calorimeter before it is put to a practical use.

For this purpose it will become necessary to determine the radiation and absorption of heat of all parts of this instrument, by a use of specific heats of all its elements.

It is pointed out in the paper that the amount of air in the water is a serious source of error in the instrument, and that therefore the same water should be used over and over again. This air has very much to do with the rate of heating of the water and also with its expansion under effect of heat; heating, furthermore, causes an escape of air from the water, and this vitiates the readings of height of column in tube 10. To avoid this as much as possible, freshly distilled water should be used, and care taken not to mix air with it in filling the chamber; instead of using a funnel, 37, the chamber should be filled by means of a tube from below, expelling the air through tube 10, as at 37, Fig. 294. It seems to me that the apparatus shown in Fig. 285 does not provide means for expelling all of the air in the chamber, and for this purpose the roof of the chamber should be conical, as shown in Fig. 294, and the adjustment obtained by making the bottom flexible, as at 11 (Fig. 294), and providing an adjusting screw, 14 (Fig. 294), which changes the height of column of water in tube by raising or lowering the bottom; the tube 10 should be located at the highest part of the top, to catch all air, while tube 37 (Fig. 285) should be removed, and should be placed as at 37 (Fig. 294), as it will act as an air trap, and there are no means of telling when there is air in it or not.

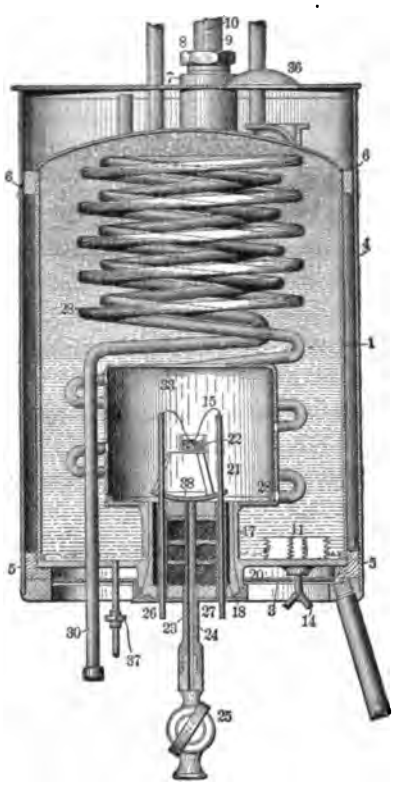

FIG. 294.

Digitized by Google

It also seems to me that the instrument would give more accurate results if a liquid were used which does not vaporize at ordinary temperatures, and which at the same time does not absorb air as rapidly as water, and, moreover, whose coefficient of expansion is much greater than that of water.

It is also possible that the apparatus would give more reliable results and be more responsive if the gases of combustion issued into a coil which leaves the bottom of the combustion chamber, as at 28, Fig. 294, so that the liquid in the bottom of the chamber is heated more than seems possible in the form of instrument shown in Fig. 285.

Prof. D. S. Jacobus.—I would like to ask Professor Carpenter how he allows for the latent heat of the vapor which passes off in the products of combustion.

Professor Carpenter.—In regard to the method of making a calibration, I might say that we calibrated at all possible rates of combustion, and thus we got a calibration curve from which all results were taken. Mr. Henning refers to the effect of air, but magnifies very much the difficulties which arise. In fact, in the present form of instrument this trouble has been obviated by the conical form of the top. I think he has made some suggestions that would lead to some improvements in details of construction, which, with his consent, we may adopt. The coil for discharge gases is led out of the top of the combustion chamber; the temperature of the water in the calorimeter is never allowed to rise over 70 degrees. This coil is very long, about 16 feet in length, and kept on a continual grade, in order to allow the water of condensation, which occurs in every case during the burning of bituminous coal, to drip back into our combustion chamber, so that we could remove it. In that way all heat that we could lose would be that carried out by the gases at the normal temperature of the water. As the volume and pressure of the gas used are known, this can be easily computed.

Professor Jacobus.—In calorimeter work, where sufficient moisture is produced in combustion, it is usual to assume that the products of combustion are saturated with moisture. The question was, How do you allow for that in this instrument?

Professor Carpenter.—The question is, the loss due to saturated vapor. We have not usually considered this loss, as our oxygen was supplied in a saturated condition, and it has been in every case very small. We could very easily do it, however, as tem-

Digitized by Google

peratures and volume of the oxygen used are known. I might say, in relation to those corrections regarding specific heat, to which Mr. Henning refers, that we have figured them out quite carefully, but have found the results of little practical importance. The difficulties regarding air in the calorimeter are practically obviated by making the top cone-shaped instead of flat, although it did make us a good deal of trouble in the early form; in fact, it has really been the only serious difficulty that we have met in its use.

Mr. Henning.—I do not think you understood correctly my criticism in regard to the rate of the discharge of heat. Of course, we know that when pure carbon is taken and burned, using varying quantities of it, you will get more or less heat, but not a different rate of combustion, and the gases you drive off are exactly the same in every case. Now, if you take a lean coal, or one which contains other materials, the rate of burning will be much slower, compression in the chamber will be less, according to the fuel which is used, and the result will be that, as the gases pass through the tubes at a different rate of flow, the results may materially change. Of course, I know that the effect on results of the heat generated by combustion is eliminated and lost, because the same loss occurs when pure coal is burned. The heat units in pure coal are known, and, knowing what readings this instrument gives, any other fuel could be burned in it. Now, knowing that burning one gram of pure carbon raises the column of liquid up to the top notch of the scale, and simply marking that point 15,000, because it is known that the pure carbon used ought to give 15,000 heat units, then, if that reading is obtained with another fuel, it will be known to generate the same heat units. If any heat were left in the instrument, the water on the scale would simply stand a little bit higher. I understand that. But the rate at which those gases are driven off will change the rate of absorption of heat in the water, and therefore I think the instrument must be calibrated for slow-burning fuels as well as for carbon.

Professor Carpenter.—I would say that if we had considered the effects of different rates of combustion on the rates of flow, which Mr. Henning mentions, in the beginning of our work, it would have saved us six weeks of time. We did discover it after we got to work with different fuels, and found that the rate of combustion affected the pressure and the rate of flow of the dis-

Digitized by Google

charge gases, and, consequently, had very great effect on our results. But we finally got a method which I did not mention in the paper, as at the time I considered it as pertaining more to the supply of oxygen than to the combustion of fuel. This entirely compensated for that loss, and afterwards we were enabled to get perfectly uniform results in every case. Our discharge orifice is very small, and in the extreme end of the coil; the combustion chamber is connected with a large tube leading to an oxygen tank, which was arranged in such a manner—I think I can show by my sketch (Fig. 295)—that we had, during the combustion, and no matter at what rate combustion took place, a perfectly uniform pressure on the gases in the combustion chamber; that is, if it took place at a higher rate, and generated more pressure, it simply pressed backward and up into our oxygen tank, and if it took place at a slower rate the oxygen tank pressed on that. So that the pressure in the combustion chamber was perfectly uniform, regardless of the rate of combustion. I should have mentioned this construction in the description of the calorimeter, but I did not at the time consider it of much importance. This, I think, answers all inquiries.

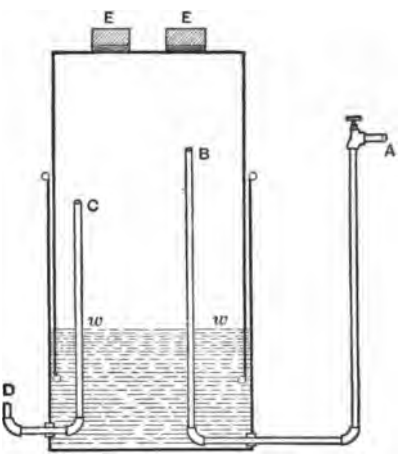

FIG. 295.

I may say that the remarks of Mr. Henning call attention to losses which are of considerable magnitude, and I must admit that it is not complimentary to myself that I did not discover the magnitude of these errors until the calorimeter had been constructed and put in actual operation.

The other errors mentioned are all small ones, and can, if necessary, be determined, and the necessary correction easily made. The errors due to effect of specific heat of the various parts of the instrument are all easily measured by the methods in use with other calorimeters, but I think are more accurately determined by the method of calibration described.

It should be noted that the instrument is not presented as one

Digitized by Google

with the minute accuracy which is presumed to be obtained by some of the other instruments; but if one were to burn the same kind of coal several times in succession in this and in the other forms, he will be surprised at, first, the lack of uniformity in his results with the others when the heat is measured by a thermometer immersed in a jar of water; and, second, at the uniformity which is secured by the present instrument.

Mr. Kent.—Professor Carpenter stated in his first remarks that his investigations went to show that there was no relation between the approximate analysis of coal, as I understand, and the calorific value.

Professor Carpenter.—The remarks were restricted to bituminous coal, as the anthracite coal has a value proportional to the fixed carbon, very nearly.

Mr. Kent.—About three years ago I made a study of Mallet's results in the French memoir, which I plotted in a curve, the base line being the amount of fixed carbon in the coal—the different bituminous coals—and the ordinates the heating value, and I found a remarkably close relation. I gave a brief account of this in our *Transactions*, vol. viv., p. 822.

Professor Carpenter.—They were foreign coals, were they not?

Mr. Kent.—They were foreign coals. It was really a remarkable curve that this made, with a very slight deviation of any individual coal from the curve—not over 3 or 4 per cent. I should not wonder if the same things would happen with American coal.

Professor Carpenter.—There is a large number of complete analyses of American coals given in a book by Grove & Thorpe, and by consulting those you will see that the volatile matters sometimes contain as much as 20 per cent. of oxygen, and then, again, less than 4 per cent. As oxygen is not a combustible, we cannot obtain uniform calorific values from these different coals. I have plotted all the results that I can find, and no curve will come anywhere near the points. It is possible that if all coals were from the same district, or of a similar composition, the approximate analysis would be of value, but it is of little use for American soft coals from different districts.

Mr. Kent.—I think differently, and for this reason: Whenever we find a coal having 15 or 20 per cent. of volatile matter, there is very little oxygen in that coal, and we will get a larger number of heat units from it. When we find 40 and 45 per cent. the oxygen increases very much. I do not believe it would with American coal.

Digitized by Google

Professor Carpenter.—These statements certainly do not agree with our determinations. Our analyses were repeated three or four times, and are never published unless within 1 per cent. of the average. We took every possible precaution to secure accuracy.

Mr. Kent.—Have you plotted the results?

Professor Carpenter.—I have, from every possible standpoint, but I could not get any curve to fit the results.

I may add that I knew that Mallet's results agreed well with the results of proximate analyses, and I expected the same agreement in American coals, until I came to investigate the matter, and learned that the volatile matter varied, not regularly, as you state, but with all sorts of irregularities.

A single example will show the extreme variation. Coopers-town coal contains 30.4 per cent. volatile matter, and gives 15,266 B. T. U. per pound; Gillespie coal contains 34.9 per cent. volatile matter, and gave only 10,506 B. T. U. per pound. The difference in proximate composition is small, in calorific values large.

Digitized by Google

DCLIV.*

REPORT OF COMMITTEE ON STANDARD TESTS AND METHODS OF TESTING MATERIALS.

PRESENTED BY G. C. HENNING, REPORTER FOR THE COMMITTEE.

DESCRIPTION OF TESTS.

In June, 1894, a paper presented to the Foundrymen's Association, Philadelphia, by W. J. Keep, contained the following proposition:

"To produce a uniform grain and a sound casting, and one-eighth of an inch shrinkage to the foot, the silicon must vary with each variation in the size of the casting.

AN APPROXIMATE KEY FOR REGULATING FOUNDRY MIXTURES.

Size of the Casting.	Silicon Required in the Casting.	Shrinkage of the Casting.	Shrinkage of a ½-inch Test-Bar.
½ inch square.	3.25 per cent.	.125 per foot.	.125 per foot.
1 " "	2.75 "	.125 "	.135 "
2 " "	2.25 "	.125 "	.145 "
3 " "	1.75 "	.125 "	.155 "
4 " "	1.25 "	.125 "	.165 "

"But such a variation in silicon will cause a variation in the shrinkage of a half-inch test bar.

"The table shows that a casting 1 inch square needs 2.75 per cent. of silicon to give it a shrinkage of .125, and that a half-inch square test bar from the same metal will show a shrinkage of .135; but that a casting 4 inches square, on account of its slow cooling, needs only 1.25 per cent. of silicon to produce the same grain and shrinkage. The .165 shrinkage of the half-inch test bar shows that the iron will make a casting 4 inches square with a shrinkage of .125 and that it contains the correct amount of silicon."

This proposition seemed to be what might be expected in foundry practice, but all the data existing at that time was the upper

* Presented at the Detroit meeting (June, 1895) of the American Society of Mechanical Engineers, and forming part of Volume XVI. of the *Transactions*.

Digitized by Google

line of figures in the table and the record of a hydraulic cylinder 3 inches thick, silicon 2.25 per cent. and shrinkage of a ½-inch bar from the same metal .155 inch per foot. To prove this proposition the plan of making several series of test bars with varying silicon, and varying in size from ½ inch to 4 inches square, was proposed. As your Committee on Standard Tests and Methods of Testing Materials had decided to include cast iron in its investigations, Mr. W. J. Keep was appointed a member of that committee for the purpose of assisting in this work, having facilities and connections to do it in a thorough manner. It was decided to include the investigation of shrinkage. The programme was as follows: The investigation should show the relation between different sizes of castings poured from iron of a uniform composition, the chemical composition of each size of casting when cold, and the physical properties of each. The tests were not to be laboratory experiments, but ordinary foundry work, which should represent foundry experience.

The size of the castings to be made should be such as would represent both light and heavy foundry work, and should comprise, along with other castings, test bars of each size and shape used in any country for testing cast iron. The sizes fixed upon were as follows:

2 test bars	1″ × 1″	× 12″
10 test bars	1″ □	× 12″
2 test bars	1″ □	× 14″
2 test bars	1″ □	× 26″
2 test bars	1″ □	× 50″
2 test bars	1″ □	× 56″
2 test bars	1″ × 2″	× 14″
2 test bars	1″ × 2″	× 26″
2 test bars	2″ □	× 26″
2 test bars	3″ □	× 26″
2 test bars	4″ □	× 26″
4 test bars	1⅛″ ○	× 12″
2 test bars	1⅛″ ○	× 14″

Keep's size.

Engineers.

Architects.

Water works.

Heavy castings.

For comparison.

Later on it was noticed that we had omitted the length most used in England, 1″ × 2″ × 38″, and these were therefore added. A larger number of bars 1⅛″ ○ × 14″ long, cast both flat and on end, and bars for tensile and also for compression tests were added; 2 bars 1⅛″ ○ and 2 bars ¾″ ○ from patterns furnished by Messrs. Riehlé Bros.; 2 bars 1½″ ○ × 15″ long to be turned down to 1⅛″ ○, and a large number of bars with 1½″ ○ ends for grips, and a central portion 8″ long and 1⅛″ diameter, and the whole bar 20″ long, were added to the above. Some were cast flat and some on end. The whole of these bars will not be found

Digitized by Google

in each series. The amount of iron available for several of the series was insufficient to pour all, and the bars last named were not added until the last five series.

The chemical composition was to represent all foundry mixtures varying from white iron to the softest gray. The former would contain less than 1 per cent. of silicon, and the latter would run as high as 3.50 per cent., the silicon determining the grade and color of the iron. The plan was to make series of the bars tabulated above, and the iron poured in the moulds was to contain definite percentages of silicon.

Enough pig iron was to be procured of uniform chemical composition to make six series of these castings, in which the silicon should be 1.00, 1.50, 2.00, 2.50, 3.00, and 3.50 per cent. The other chemical elements were to be kept substantially uniform in each. These variations in silicon would represent the silicon in all foundry work from heavy machinery to the lightest hardware castings.

The physical properties of the castings which were to be determined were:

The grain, whether coarse or fine, compact or open; the cause of such structure.

The shrinkage in inches per linear foot, which is the decrease in size from the dimensions of the mould in which the test bar was cast; the cause of such shrinkage.

The chill of each size of test bar, which is the depth in inches of the white portion, caused by the fluid iron running against a cast iron chilling surface.

The strength of each size of test bar, and the relative strength which was found by reducing all sizes to that of the smallest test bar.

These were determined by the men in charge of several schools of mechanical engineering. Reports will be made of the transverse, tensile, and crushing strengths, and the logs will give maximum fibre distance, moment of inertia, total stress, deflection, maximum stress on outer fibre, shearing stress, modulus of elasticity, and resilience.

Materials.—Application was made to several blast furnaces for three tons of pig iron with a guaranteed analysis, each pig of which should have a uniform grain, and with silicon as near as possible to 1 per cent. Two furnaces responded.

Iroquois Furnace Company, of Chicago, sent us three tons of

Digitized by Google

No. 3 "Iroquois" Malleable Bessemer pig iron, of clear uniform gray fracture, very strong and tough in the pig. It contained TC 4.07, GC 3 15, CC 0.92, P 0.23, Si 0.88, S 0.035, Mn 0.50 (G. D. Chamberlain, chemist). This iron was made from Lake Superior ore with coke.

The Ashland Iron and Steel Company, of Ashland, Wis., also sent us three tons of charcoal pig iron, brand "Hinkle," also from lake ores containing TC 3.507, GC 2.69, CC 0.817, P 0.13, Si 1.09, S 0.015, Mn 0.72 (E. E. Johnston, chemist). Both of these companies analyze each cast for silicon and furnish iron on a guaranteed analysis when required. To select an iron suitable for such a series of tests it is necessary that each pile in the furnace stock-yard should have been marked with the amount of silicon it contained. A number of furnaces volunteered to make such an iron as was required, but it would have been almost impossible to make a furnace produce such an iron with every desirable quality. The only way was to select the iron from stock already on hand. When the iron was found, each half-pig was broken again to make sure that all pieces sent should have the same grain; then several pigs were drilled and another analysis was made as a check on the original determination. In the proposed six series from each of these irons, silicon was to be added in as concentrated a form as possible, so that the characteristics of each iron might remain the same in each series except as they were altered by the silicon. The silicon was added by using an iron branded "Pencost," made at Bessie Furnace in the Hocking Valley of Ohio, in 1888, while it was managed by Mr. Edward Orton, Jr. It was made from carbonaceous block ores from Vinton and Perry counties, and was smelted with raw coal and coke. It contained, according to analyses by students at Sibley College, TC 2.83, GC 2.072, CC 0.761, Si 10.87, P 0.49, S 0.142, Mn 0.70. Analysis of drillings from one pig by Geo. H. Ellis, of Chicago, gave 10.27 per cent. silicon. (The iron was purchased on an analysis of Si 14.77 per cent.) The following analysis was made by Mr. Dickman from drillings from 25 pigs of each mixed:

	TC	GC	CC	Si	S	P	Mn
Iroquois	4.05	3.20	0.87	0.98	0.035	0.225	0.490
Hinkle	3.50	2.73	0.87	1.03	0.012	0.129	0.700
Pencost	2.79	2.04	0.75	11.00	0.015	0.487	0.670

Digitized by Google

From Mr. Dickman's analyses, which were made from a very carefully selected average, it would be difficult to select a better set of irons to mix together. No mixture of these irons could materially change any element except the silicon. It is known that while using such a high silicon iron as this "Pencost," it would be impossible to get the silicon evenly diffused throughout the melted iron, but to get 3.50 per cent. of silicon into either "Iroquois" or "Hinkle," so much of any ordinary iron with silicon ranging from 5 to 6 per cent. would have to be added that the mixture would not be comparable with the original irons. For this purpose therefore it was necessary to use an iron with high silicon.

At first it was intended to make only six series with "Iroquois," then six more with "Hinkle" were added. As these would represent Northern coke and charcoal irons, it was desirable to represent Southern iron from fossiliferous ore; but, for reasons given regarding the difficulty in selecting pig iron unless it has already had the silicon determined, it did not seem probable that a gray Southern pig iron with less than 1 per cent. of silicon could be obtained, at least in time. The Michigan Stove Company were using at the time various grades of De Bardeleben Southern pig iron, softened by Ashland, Ky., silvery iron. Three series of test bars were made from this mixture, which make the three Southern series. It was suggested that the irons used in the tests were confined rather too closely to the region about Detroit, and acting on this suggestion, a series was obtained from C. G. Bretting & Co., who made machinery castings from "Hinkle" pig iron at their foundry in Ashland, Wis. We were unable to find a founder who was willing to make a series of test bars from a regular foundry mixture of "Iroquois." A series of white iron test bars was made by the Michigan Malleable Iron Co., of Detroit. The patterns and flasks were then shipped to Philadelphia, where a series was made by Messrs. Bement, Miles & Co., manufacturers of heavy machine tools, and another by Messrs. A. Whitney & Sons, makers of car wheels. Each foundry used the regular mixture required for the work they were doing at the time, and the moulding was done the same as for their own castings.

The twelve series from "Iroquois" and "Hinkle" were melted with coke, which Mr. Dickman found to be of the following composition: Fixed carbon, 90.35; volatile matter, 0.94; ash, 8.71 = 100. Sulphur, 0.97; phosphorus, 0.021.

Digitized by Google

Description of the Series of Tests.—The Detroit Stove Works, of Detroit, had a small cupola suitable for the work, and the depression in business in 1894 made it possible for them to spare the room necessary for the work. They volunteered to furnish the men required and the fuel. It was suggested that one series should be made each day, in which case the cupola would be relined for each heat, but as this would take three weeks, as they were running only four days each week, it was decided to run one heat after another as fast as the moulds could be put up, without dropping the cupola bottom. One reason against a single heat of 700 pounds each day was that the iron first melted in a freshly lined cupola is harder, has a higher shrinkage, and is not so strong as that melted after a cupola is hot. The desire was that each series should represent the average iron in everyday foundry work. The cupola was 30″ diameter inside the lining. The tuyères were in vertical rows, each 1½″ in diameter, and 4 tuyères in a row. These took the wind from a chamber inside the shell 3″ wide x 24″ high, into which it was delivered by a pipe, on each side, of 10″ diameter. The Root blower was driven by an independent engine, therefore the blast was under perfect control. The usual bed in regular work was 600 pounds, and the superintendent, Mr. L. Crowley, and the foreman, Joseph Unsold, thought it best to use this amount for each heat to bring the melting point at the proper height. The iron was accurately weighed and placed in boxes marked with the number of the series to which it belonged. The "Pencost" iron was charged on the coke first, and the other iron afterwards, and in from 10 to 15 minutes the 700 pounds of iron were melted. The sand for moulds for the whole twelve series was wet down and tempered uniformly before melting began, and the day before, one moulder worked all day on the first set of moulds. When the iron was melted it was at once tapped into two bull ladles and into enough small ladles to fill all the moulds. As soon as all the iron was drawn out, the test bars were poured. Six moulders besides the melter were at work. The two bull ladles poured the 4″, 3″, and 2″ bars. There was no regular order in pouring, except that the iron for the ½″□ bars was caught after the bull ladles were full. As soon as the first moulds were filled the moulders began shaking out. As it took longest to mould the 4″□ and 3″□ bars, these were shaken out within six minutes from the time they were poured. The yokes were cooled in a tank

Digitized by Google

of water, and moulding the next series began at once. Sand was never used over, there being a pile of tempered sand of sufficient size for the twelve heats. The bars, as soon as they were cool enough to handle, were dragged together and the gates knocked off.

1*st Heat*, Aug. 16, 1894.—The first bars were made from 693 pounds of "Iroquois" iron and 7 pounds "Pencost" to bring the Si to 1 per cent. The gates were placed in a box marked with the same number as the test bars. Each test bar contained the number 1 raised on the surface, it having been stamped in the mould. As soon as the iron was in the ladles, the melter knocked out the breast of the cupola and pulled out what slag he could reach. The wind being off, the draught began to cool the slag in the cupola, and it was thought best to use some limestone at the next heat to thin the slag to facilitate its removal. The wind for this first heat was put on at 7.05 and the iron was all melted at 7.22. Time, 17 minutes, and all bars were poured by 7.37 A.M. Iron charged 700 pounds on a bed of 600 pounds of coke. The test bars weighed 559 pounds and the gates 69 pounds.

2*d Heat.*—400 pounds of coke were charged and a small quantity of limestone, then 42 pounds "Pencost," and then 658 "Iroquois," it being expected that the castings would contain 1.50 per cent. silicon. Wind went on at 9.10 A.M. and the iron was all melted at 9.18. Time, 8 minutes. As the time taken to pour the bars was substantially the same in each heat no record was taken after the first. As soon as the iron was in the ladles the breast was again removed and more slag was found on the bottom than before and it soon cooled too much to be removed. Product: 573 pounds test bars and 88 pounds gates. Moulding proceeded as before.

3*d Heat.*—The charge was as before, 400 pounds coke, about 10 pounds limestone, 78 pounds "Pencost," and 622 pounds "Iroquois." Silicon estimated 2 per cent. Wind on 11.02, iron all melted 11.09. Time, 7 minutes. There was not as much iron in the ladles this time as before, and one set of round bars could not be poured. The slag being difficult to remove after this heat, calcined lime was used next time instead of stone.

4*th Heat.*—To melt out slag 700 pounds coke were charged with about 15 pounds lime, and the wind put on before the iron.

Digitized by Google

Then 113 pounds "Pencost" was charged and 587 "Iroquois." Silicon estimated at 2.50 per cent. Wind on 1.15 P.M., iron melted at 1.25. Time, 10 minutes. As soon as the iron was in the ladles the breast was removed and 200 pounds of coke and 20 pounds lime were charged and the wind put on light to melt out the slag. The product was, test bars, 558 pounds; gates, 69 pounds. It now seemed as though more than 6 heats could be made before evening.

5th Heat.—Coke, 600 pounds, with 10 pounds lime, 148 pounds "Pencost," and 552 pounds "Iroquois." Silicon estimated at 3.00 per cent. Wind on 3 P.M. Iron melted at 3.15. There was not enough iron to pour all the moulds. Product: 523 pounds test bars and 68 pounds gates. On removing the breast the melter and foreman thought there was too much slag to proceed and so gave up work for the day. I could not be present as the work proceeded, or I would probably have had the 6th heat taken off, as the iron melted fast enough each time, and the accumulation of slag could not influence the iron.

6th Heat, Aug. 17, 1894.—It was found that there were 18 inches of slag in the cupola after the 5th heat, and the melter was not ready for a heat before 9.49 A.M., when the wind was put on. Iron was all melted at 10.04 A.M. Time, 15 minutes. The iron did not appear as hot or as fluid as it did the previous day, the cupola being freshly lined. There was not enough iron to fill all the moulds. The charge was 600 pounds coke, 10 pounds lime, 183 pounds "Pencost," 517 "Iroquois." The silicon was figured at 3.50 per cent. Product: 519 pounds test bars, 67 pounds gates. This completed the Iroquois series, but the last series was influenced by the fresh cupola.

7th Heat.—First of "Hinkle." This day the wind was kept on continuously, though very soft between heats; 100 pounds of coke was burned in this way between each heat to flux out the slag. The charge was 600 pounds coke and 10 pounds lime, 700 pounds "Hinkle," and no "Pencost," for silicon was already 1.00 per cent. Wind was on at 11.15 A.M. Iron melted at 11.30. Time, 15 minutes. Product: 559 pounds test bars and 79 pounds gates.

8th Heat.—Coke, 600 pounds, with 10 pounds lime, 36 pounds "Pencost," 664 "Hinkle." Silicon estimated 1.50 per cent. Wind on 1 P.M. Iron melted at 1.15. Time, 15 minutes. Product: 544 pounds test bars, 52 pounds gates. The wind was

Digitized by Google

slowed down and the breast removed and 100 pounds coke burned to allow slag to run out.

9th Heat.—Charge: coke, 600 pounds, 10 pounds lime, "Pencost" 72 pounds, "Hinkle" 628 pounds. Silicon, 2.00 per cent. Wind on 2.10 P.M., and iron melted 2.18. Time, 8 minutes. Product: 530 pounds test bars and 62 pounds gates. The cupola was free from slag and it looked like finishing the 12 heats during the day. The 600 pounds of coke was in for the next heat and the wind increased when it was discovered that the cupola shell was red hot, and it was thought unsafe to take off another heat. The cupola scrap had not been taken from under the cupola the previous day, and the scrap for the 9 heats was now weighed. The scrap for the two days was 423 pounds, or an average of 47 pounds for each heat. The loss of iron for the 9 heats was 339 pounds, or 37.7 average for each heat.

10th Heat, August 20, 1894.—The cupola lining had been repaired. The charge was 650 pounds coke, 108 pounds "Pencost," 592 "Hinkle," silicon estimated 2.50 per cent. No lime was used as there were only three heats left. Wind on, 7.30 A.M.; iron melted, 7.44; time, 14 minutes. Not enough iron to fill all moulds. These had stood over since Friday night (foundry running only four days per week). Product: 494 pound test bars, 60 pound gates. This iron was influenced by the fresh lining of the cupola.

11th Heat.—Charge: Coke, 650 pounds; "Pencost," 144 pounds; "Hinkle," 556 pounds; silicon calculated at 3.00 per cent. Wind was off between heats. Wind on, 9.04 A.M.; iron melted, 9.13; time, 9 minutes. Product: 544 pounds test bars, 59 pounds gates.

12th Heat.—Charge: Coke, 600 pounds; "Pencost," 180 pounds; "Hinkle," 520 pounds; silicon estimated, 3.50 per cent. Wind on, 10.40 A.M., iron melted, 10.50; time, 10 minutes. Product: 559 pounds test bars, 75 pounds gates. The cupola scrap for the last three heats was 158 pounds, or 53 pounds for each heat. The loss of iron for three heats 150 pounds, or an average of 50 pounds for each heat.

Remarks.—Each set of six heats should have been put through the cupola in one day without relining. This would have made the record more uniform. The best results would be obtained by running the cupola with coke alone for one hour, and then melting the first iron. In this way all six heats would have been

Digitized by Google

melted in a hot cupola. Some other hitch would probably occur, however, to prevent a uniform series. If only one heat had been made each day the six series would not have been likely to be as regular as they now are, and the shrinkage would have been too high, and the strength too low, to agree with ordinary practice.

Again, the very peculiarities are valuable, as showing the influence of changes in treatment, which would not be thought of if they had not been brought out in this way.

Southern or De Bardeleben Series.

Series 13, August 22, 1894.—The mixture was made up of Nos. 2 and 3 foundry, and Nos. 1 and 2 soft from De Bardeleben Furnace (Ala.). The silicon was imparted by No. 3 Ashland (Ky.), silicon about 5 per cent. There were not as many bars moulded as in the first twelve series, the weight being only 483 pounds. Instead of shaking the castings out quickly as before, they were covered with the hot sand in which they were cast and it took the 4-inch square bars more than 48 hours to cool. Instead of having the least shrinkage, they proved to have more than those bars that were cooled more rapidly.

Series 14.—This series was made July 16, 1894, as a trial of the patterns, and comprised all of the sizes of bars except the 1 × 2 × 38 and the 20-inch for tension. The bars were poured from substantially the same mixture as Series 13, only a little less silicon iron. The bars were all poured together from iron caught at one time, and the bars were shaken out at once and left to cool. The next morning, the 4″ and 3″ bars were still hot. The charge was a mixture of the same irons as Series 13, and the bars weighed 558 pounds.

Series 15, August 29, 1894, is from substantially the same pig-iron mixture as Series 13 and 14. It was made to try the effect of more rapid cooling upon shrinkage. For Series 13, 14, and 15 the iron was melted in a cupola 62 inches inside diameter. The lining was drawn in to 39 inches just over the tuyères, and enlarged again to 54 inches below the tuyères. There were 16 tuyères, each 4″ high and 7″ wide. The blast was from a No. 7 Root blower and the pressure 14 ounces. The fuel was Connelsville coke. The sand bottom was 18 inches below the lower edge of the tuyères. The charge was 1,400 pounds of coke for a bed, 1,700 pounds pig iron, and 1,200 pounds of sprues from the

Digitized by Google

previous day's cast, making 2,900 pounds of iron to each charge. No old scrap was used. 300 pounds coke and the same weight of iron was used, as before, for 14 charges, then 250 and 200 pounds of coke for the last two charges. About 40 pounds of limestone were used to each ton of iron melted, and the slag was tapped after the ninth charge. The amount melted in this cupola per day was about 30 tons. The test bars made at this heat were ten ½″ □ × 12″ long, two 1″□, two 1″ × 2″, two 2″□, 2 × 3″□, and two 4″□, and twelve round bars of various sizes. The iron was taken at the middle of the heat. There were 2 bull ladles holding 150 pounds and 5 small ladles holding 40 pounds each.

The catch began at 3.57 P.M. and ended at 4.00 P.M. It took 13 men three minutes to catch the iron and 7 minutes to pour the bars. The weight of the test bars, not counting the gates, was 483 pounds. The ½-inch bars were shaken out at 4.05 P.M. The 1″□ bars at 4.08, and all bars were shaken out at 4.15 and scraped clean of loose sand, and were all piled in a row on a brick floor at 4.20 P.M.

The ½″□ bars were so cool that they did not feel warm to the hand in 1 hour and 10 minutes; the 1″□ in 4 hours 30 minutes; the 1″ × 2″, 6 hours 30 minutes; the 2″□, in 9 hours; the 3″□, in 10 hours, and the 4″□ bars, in 13 hours. These bars had the least shrinkage of the three series of Southern iron.

Series 13, with all bars covered, cooled as follows: The ½″□, in 3 hrs.; the 1″□, in 5 hrs. 30 min.; the 1″ × 2″, in 7 hrs. 30 min.; the 2″□, in 11 hrs. 30 min. At the 2d Iroquois heat a moulder was asked to keep time when the bars ceased to feel hot. He reported: The ½″□ cooled in 1 hr. 47 min.; the 1″□, in 3 hrs. 42 min.; the 1″ × 2″, in 5 hrs. 27 min.; the 2″□, in 9 hrs.; the 3″□, in 13 hrs. 30 min.; the 4″□, in 22 hrs. 30 min. These bars were thrown against a sand heap and were partially covered with sand.

The iron for Series 13, 14, and 15 was drawn from a cupola as fast as melted at the rate of about 11 tons per hour. The pig was broken into lengths about a foot long and the grades were mixed as perfectly as practicable, the silvery iron being charged first. This illustrates the mixture of elements during such rapid melting, but it was more uniform on account of the Ashland containing only 5 per cent. of silicon, and the other irons from 2.25 per cent. to 3.50 per cent. of silicon.

Series 16.—An effort was made to have "Iroquois" and

Digitized by Google

"Hinkle" furnaces each procure a series of bars from a foundry using their iron exclusively. The former did not respond, but "Hinkle" procured a series of bars from the foundry of C. G. Bretting & Co., Ashland, Wis., who used No. 1 Hinkle, with the scrap procured from old pulleys and an old machine. The castings made at the same time as the test bars, gears, pulleys, and some chilled castings, and rather light machinery castings. The composition of the pig iron and scrap was so nearly uniform that the chemical composition of each of the bars was very uniform.

Series 17.—The lowest silicon was in Series 1 and 7. It was desirable to show the influence of fast and slow cooling on perfectly white iron. As such iron is not used in ordinary foundry work, the Michigan Malleable Iron Company, of Detroit, were requested to make a series of test bars from the white iron used to pour their work.

The mixture was made of Lake Superior charcoal pig iron. The iron is charged into an air furnace which will melt at one firing about 5½ tons of metal. The pig iron as charged contains from 1 to 1.25 per cent. of silicon. The reverberatory action of the flame refines the iron and burns out the silicon until it is "high" enough to run almost entirely white in castings of about 1 square inch section. In all smaller castings it runs entirely white. The number of test bars made was the same as in Series 15. The iron was all taken from the furnace at once, and at once poured into the moulds. The weight of test bars was about 480 pounds.

When this investigation regarding cast iron was outlined, this company was requested to melt the twelve heats of "Iroquois" and "Hinkle" in one of their air furnaces, thinking that the conditions could be kept more nearly uniform than in a cupola. It was found that the construction of the furnace would not admit of melting as small a quantity as 700 pounds of pig iron, and another objection was that the action of an air furnace would more or less change the metal from what it would be if melted in a cupola. (*Gun iron is exactly this iron*, only it is not made as *high* as for malleable castings.) In melting gun iron, the air furnace brings the iron up until it gives the required depth of chill. In this Series 17 the metal is gun iron, for it is made from charcoal iron, but it is brought to higher temper than if used for mortars or chilled rolls. An effort was made to

Digitized by Google

have a series of test bars made at Philadelphia from regular chill roll iron, but the works were sold just before the patterns arrived. Series 17 will give the information that could have been obtained from a mixture intended for mortars, or for chilled rolls.

Series 18.—Since the work had so far outgrown the original plan of six series of "Iroquois" iron, it was thought best to accept an offer of Messrs. Bement, Miles & Co., of Philadelphia, makers of the heaviest machine tools, to make such castings as we might desire. In each of the preceding series the iron was melted exactly as in any foundry, and was drawn into as many ladles as would hold the quantity of iron necessary to pour the test bars. The mixture was made in the hearth of the furnace, and the chemical elements were more or less unevenly diffused, especially in the first twelve series, in which a very high ferro-silicon was used, and the melting was very rapid. This Series 18 was to be more extensive than any other, and was to be a check on conclusions drawn from the previous series. The metal for this series was to be mixed in a large ladle, so as to be as nearly homogeneous as it was possible to make cast iron. Date, Feb. 18, 1895. The cupola record was 2,250 pounds each (500 pounds each charge), "Swede" (plain), "Pulaski" (No. 2), "Princess" (No. 2), and "Kemble" (No. 2) = 9,000 pounds; 8,100 pounds scrap (1,800 pounds each charge), 900 pounds cast iron borings (200 pounds each charge); total iron charge 4,000 pounds. The bed was 1,200 pounds coke and 500 pounds coal, and 160 pounds coke and 100 pounds coal was used between the iron charges. (Number of iron charges, 4½; of coke charges, 3½.) The blast pressure was 8 ounces; fire lighted 1 P.M., commenced charging 2.30; men 2; finished charging 4.55 P.M.; blast on 4.00, first iron 4.30, bottom dropped 5.30 P.M. Pounds iron to one of fuel, 6.9; pig bed, 1,000 pounds. The test bars for A. S. M. E. were cast from the middle of the heat. Cast iron borings were put up in wooden boxes with covers nailed on, 100 pounds to each box, two boxes to each charge. The following letter accompanied the above: "The cupola used was a 'Colliau,' the fuel anthracite coal and coke, with 8 ounces of blast pressure; proportion of iron to fuel, 7 to 1 nearly. The total heat was a small one, only 18,000 pounds; hence the low rate of iron to fuel. The test bars were poured in the middle of the heat. The iron was taken from the cupola in one tap into a 2,500-pound

Digitized by Google

ladle. Small ladles were then filled from the 2,500-pound ladle, and the test bars were poured as rapidly as possible. The iron was hot and fairly fluid. A test piece which was turned to 1¼″ diameter was made from this iron, which was broken at A. Whitney & Sons, and showed 29,040 pounds per square inch (tensile). The large test bars, 3″ □ and 4″ □, show that the metal has shrunk somewhat. This, of course, could have been prevented by the use of feeding heads, but we presumed that you wished the test bars to show what the iron would do, consequently did not use the feeding head. Yours very truly, Bement, Miles & Co. Per Wm. H. Derbyshire, Supt."

Series 19.—As the only series made from viscous low silicon iron was the Series 17 of white iron, the offer, by Messrs. A. Whitney & Sons of Philadelphia, makers of car-wheels, to make test bars, was accepted. This iron was melted in a cupola, and, we understand, the mixture is from their ordinary wheel mixture. As the metal was first caught into a mixing ladle, the metal may be considered homogeneous. The sand used was too coarse to give the best results. This is a good example of the lack of appreciation of the importance of details in the making of test bars. A rough surface has the same effect as so many nicks in the surface, and weakens the bar. The series, however, shows another of the *ordinary* foundry experiences, and what we must look for in castings from cast iron. A flaw, or blow-hole, or a bit of slag, not only lessens strength from the decrease of cross-section, but it may concentrate all of the strain at that point, and thus make a casting very weak that otherwise appears strong. This iron would make very strong large castings, and if the iron had been poured into heavy machinery castings, instead of car-wheels, the moulds should have been made smooth. Mr. A. W. Whitney writes "that they could not spare sufficient room near the cupola to make our test bars." He says: "The two ladles of iron used in pouring the bars were hauled about one hundred and fifty feet, and were thus poured colder than is proper for this iron. *Ten minutes* covered the whole time from pouring from the twelve-ton ladle until everything was cast. If it had been convenient for you to wait until we could conveniently have poured these tests near cupola, and of a higher chilling mixture than we find convenient to make at present, the larger test bars would have made a better showing for us. We send with these bars one-half of our regular heavy

Digitized by Google

chill tests, poured near the cupola, and a piece of a 33″ double-plate wheel, cast about same time. It took two blows of our seven hundred pounds drop, falling ten feet, to break it in two pieces. We trust that these test bars will contribute their share of information, in regard to the practicability of a uniform test bar for all kinds of iron."

Numbering Test Bars.—One of the most difficult things for the average founder to understand is the necessity of following routine. He cannot understand why test bars made by him cannot be identified by any one else. The sizes of test bars which constitute these tests have been described. For transverse tests there were 514 □ test bars cast flat, and 138 ○ test bars cast flat and on end, for transverse test, to compare with □ bars of same cross-sectional area.

For tensile test there were 68 rd. bars cast from Riehlé Bros.' patterns; 27 rd. bars, 1½″ diameter, to be turned to a 1″ section; 28 rd. bars of a 1″ area section, 20 inches long. Or 775 test bars all told.

Most of the test bars had a raised figure cast upon them, indicating the number of the series. As soon as each series was received, each bar had its consecutive number painted on each end of its upper side (as it lay in the mould), with white paint, so that when broken each piece could be identified. A few bars were broken in transit, a few were accidentally broken in the machine without a record being taken, and quite a number of sizes of bars were not made in each of the series. The first thing on receiving a series of bars along with the yokes in which they were cast, was to measure the shrinkage, by placing each bar on the follow board and in the yoke that contained the same marks as were marked on the bar. The yokes of each size were marked with one and two notches, and the patterns were marked in the same way, so that the test bars had one or two notches, which indicated the yoke in which it was cast. Each square bar for transverse test was cast horizontal, two bars exactly alike being run from the same gate, which was set so as to feed the iron from the under side of the casting. There was one gate near each end of the mould. This arrangement made the lower half of the casting solid, and imperfections on the upper surface would do comparatively little harm, as the upper portion of the bar was only subject to compression. Cast-iron yokes were bedded in the sand, so that parallel iron surfaces

Digitized by Google

should form the ends of the mould to chill each end of the bars and permit the measurement of shrinkage by sliding a graduated wedge between the end of a bar and the surface of the chilling surface of the yoke. One corner of each bar was then split off to allow measuring the depth of chill. The bars were then packed and were shipped to the engineering schools where they were to be tested.

Digitized by Google

DCLV.*

TRANSVERSE STRENGTH OF CAST IRON.

REVIEW OF RESULTS OF TESTS MADE FOR THE COMMITTEE ON STANDARD TESTS AND METHODS OF TESTING MATERIALS.

BY W. J. KEEP, DETROIT, MICH., MEMBER OF COMMITTEE ON STANDARD TESTS, ETC.

(Member of the Society.)

STRENGTH is the ability of a material to resist rupture. Maximum strength is the greatest stress which a piece of material will resist. To obtain the necessary data for the consideration of this subject, a large number of test bars were made from different mixtures of irons.†

---

* Presented at the Detroit meeting (June, 1895) of the American Society of Mechanical Engineers, and forming part of Volume XVI. of the *Transactions*.

† A full chemical analysis of each pair of test bars has been made by Mr. R. N. Dickman (71 Atwater Building, Cleveland, Ohio), assisted by Mr. John Douglass and by Mr. E. Klooz, and by Messrs. Dickman and Mackenzie, 1224 Rookery Building, Chicago.

All test bars 1″ □ and 1″ x 2″ were tested by Professors R. C. Carpenter and C. E. Houghton at Sibley College, Cornell University.

All bars 2″ □, 3″ □, and 4″ □ have been tested by Professor C. H. Benjamin, assisted by Messrs. Lyman Marshall and L. G. Robbins at Case School of Applied Sciences, Cleveland, Ohio. The 3″ □ and 4″ □ bars of Series 17 were tested on the 300,000 pound testing machine of the Otis Steel Company of Cleveland.

Series 1 to 12 were made at the Detroit Stove Works, under the supervision of L. Crowley.

Series 13, 14, and 15 were made at the works of the Michigan Stove Company, from their regular iron mixture.

Series 16 was made by Messrs. C. G. Bretting & Co., of Ashland, Wis., makers of machinery castings; Series 17 by the Michigan Malleable Iron Company, of Detroit; Series 18 was made by Messrs. Bement, Miles & Co., makers of heavy machinery, Philadelphia; and Series 19 by Messrs. A. Whitney & Sons, makers of car-wheels in Philadelphia.

The "Iroquois" pig iron, for the first six series of bars, was furnished by the Iroquois Furnace Company, of Chicago, and the "Hinkle" pig iron, for the second six series, was furnished by the Ashland Iron and Steel Company, of Ashland, Wis.

In the report of the committee a full description of each mixture and all details of procedure will be given. The complete log of each test will be on file in the Society's archives.

Digitized by Google

There were six series of test bars (1 to 6) made from "Iroquois" coke pig iron produced from Lake Superior ore.

There were three series of Southern ("De Bardeleben") coke pig iron (13 to 15), from red fossil ore.

There were six series (7 to 12) of "Hinkle" charcoal pig iron, from Lake Superior ore.

And there were made by four different foundries, from their regular mixture, series 16 to 19.

The six "Iroquois" series had their silicon varied by means of additions of "Pencost" † silicon iron, and the average silicon by analysis was, in 1st, Si 0.81; 2d, Si 1.20; 3d, Si 1.88; 4th, Si 2.01; 6th, Si 3.04, and 5th, Si 3.19 per cent.

The three "De Bardeleben" series received silicon from Ashland, Ky.,* silvery iron, and the average silicon by analysis was, in Series 14, Si 2.81; in Series 13, Si 3.18, and in Series 15, Si 3.51 per cent.

The six "Hinkle" series received silicon from "Pencost," and the average silicon by analysis was, in 7th, Si 0.93; 8th, Si 1.17; 9th, Si 1.67; 10th, Si 2.23; 11th, Si 2.71; and 12th, Si 3.05 per cent.

The series from the various foundries (including Series 14, 13, and 15) were from their regular iron mixture, and the percentage of silicon by analysis is given in Table III.

Each one of the nineteen series contained nine test bars $\frac{1}{2}''\square \times 12''$ long, two bars of each of the following sections, $1''\square$, $1'' \times 2''$, $2''\square$, $3''\square$, and $4''\square$, each of which were two feet long. In addition, the first twelve series, and the fourteenth, contained two bars $1''\square$ of each of the following lengths, 1 foot, 4 feet, and 4 feet 6 inches, and they also each contained two bars $1'' \times 2'' \times 1$ foot long. When records of any of these test bars are wanting, it is because there was not enough iron

---

Analysis :

	* "Ashland."	† "Pencost."
Total Carbon	3.333	2.79
Combined Carbon	.209	.75
Graphitic Carbon	3.124	2.04
Silicon	5.692	11.00
	5.717	10.87
	5.399	10.27
Phosphorus	1.543	.487
Sulphur	.044	.015
Manganese	.963	.67

Digitized by Google

caught in the ladles to pour them, or because bars were broken accidentally without a record being made.

Table I. contains the average record of maximum strength of each pair of test bars.

TABLE I.

TRANSVERSE BREAKING LOADS.

	No. of Series.	Dimensions of Test Bars.									
		½" □ x 12"	1" □ x 12"	1" □ x 24"	1" □ x 48"	1" □ x 54"	1" x 2" x 12"	1" x 2" x 24"	2" □ x 24"	3" □ x 24"	4" □ x 24"
Iroquois.	1	289	2,589	1,013	513	468	4,181	1,857	7,450	25,200	54,500
	2	339	2,140	1,023	562	471	4,050	1,958	7,050	22,800	50,450
	3	389	2,619	1,248	.....	518	4,300	2,290	7,150	19,250	42,700
	4	427	2,620	1,200	556	517	4,336	1,882	7,025	19,300	48,750
	5	430	.....	1,232	585	540	.....	2,128	8,400	23,175	42,600
	6	471	2,214	.....	557	425	4,180	.....	6,225	17,750	42,150
Hinkle.	7	338	2,186	1,073	468	450	4,030	1,708	6,650	22,750	43,850
	8	395	2,457	1,100	523	463	4,272	1,925	7,050	22,175	53,450
	9	329	2,356	1,088	527	490	.....	1,753	6,850	18,850	46,300
	10	439	2,185	1,042	.....	458	3,775	.....	6,640	20,550	51,500
	11	443	2,290	.....	581	503	4,110	2,166	6,850	21,575	44,400
	12	456	2,105	1,320	501	.....	3,673	1,940	7,800	27,900	45,400
Southern.	14	378	2,592	1,200	612	512	4,765	1,968	8,450	24,050	55,050
	13	394	.....	1,173	.....	.....	.....	2,200	8,275	25,250	52,450
	15	427	.....	1,117	.....	.....	.....	.....	8,650	22,700	56,850
Foundries.	16	378	.....	1,104	.....	.....	.....	2,079	7,250	22,150	44,500
	17	471	.....	1,424	.....	.....	.....	2,661	13,450	41,800	92,000
	18	446	.....	1,400	.....	.....	.....	2,352	8,200	25,850	58,700
	19	377	... ..	1,292	.....	.....	.....	2,703	9,600	31,600	68,500

Table II. contains the record of average strength of test bars ½"□, 1"□, 1" x 2", 2"□, 3"□, and 4"□, each two feet long, each record being reduced to the dimensions of the smallest bar, viz., a bar ½"□ x 1 foot long, as this is the only way to make a direct comparison of the different records.

Digitized by Google

TABLE II.

BREAKING LOADS REDUCED TO ½" □ BAR.

	No. of Series.	Section of Test Bar.					
		½"□	1"□	1"x2"	2"□	3"□	4"□
Iroquois.....	1	289	274	246	233	233	218
	2	389	267	249	220	211	197
	3	389	344	277	224	178	167
	4	427	299	250	220	179	190
	5	430	302	266	262	214	166
	6	471	265	261	198	164	164
Hinkle.....	7	338	257	233	208	205	169
	8	395	277	254	220	205	209
	9	329	276	219	214	174	181
	10	439	267	236	208	190	201
	11	443	289	264	214	200	174
	12	456	281	236	244	259	177
Southern.....	14	378	304	272	264	228	215
	13	394	293	275	259	234	205
	15	427	279	.....	270	210	220
C. G. Bretting & Co.....	16	378	276	259	227	205	174
Mich. Mall. Iron Co.....	17	471	356	333	420	387	359
Bement, Miles & Co.....	18	446	350	294	256	235	229
A. Whitney & Sons.....	19	377	323	338	300	292	269

For more ready comparison I have plotted in Chart I. (Fig. 296) the records of "Iroquois," "De Bardeleben," and the series No. 18 from Bement, Miles & Co., from coke and anthracite irons, and No. 19, from A. Whitney & Sons (Philadelphia). The record of the Series 17, from the Michigan Malleable Iron Company, of Detroit, is also plotted on this chart. This latter is from charcoal pig iron melted in an air furnace until it is suitable to pour for malleable castings. It is of the same composition as gun iron.

The records of "Hinkle" and the series from C. G. Bretting & Co., from "Hinkle" charcoal iron, are plotted in Chart II. (Fig. 297).

The cause of much of the irregularity of these records is the varying conditions which surround all foundry operations. Practical iron-founding cannot be separated from such influences, which produce variations in each casting.

Chart III. (Fig. 298) is a modification of Chart II., the curves having been made regular; that is, the influences which caused the variations in the record of the different sizes of bars have been eliminated, but the general conditions which influenced each series as a whole are left unchanged.

Digitized by Google

CHART I.

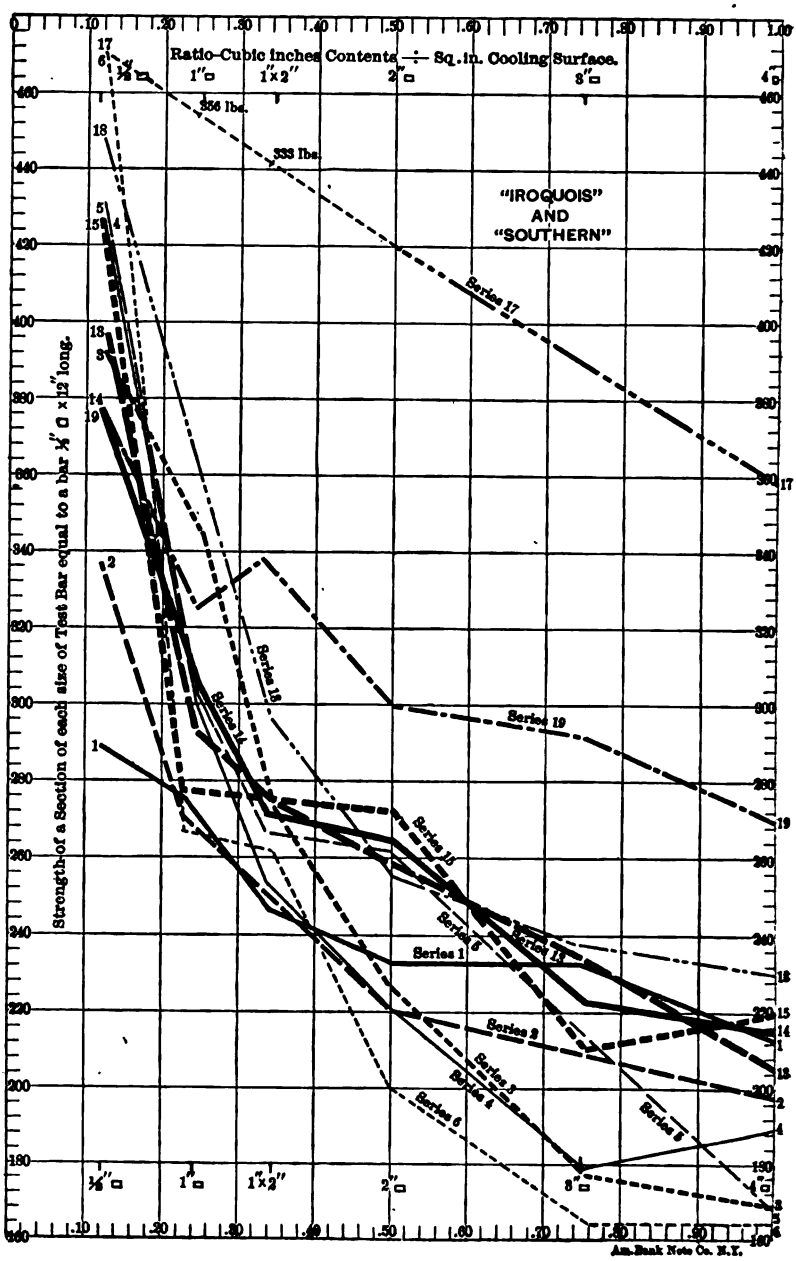

FIG. 296.

Digitized by Google

CHART II.

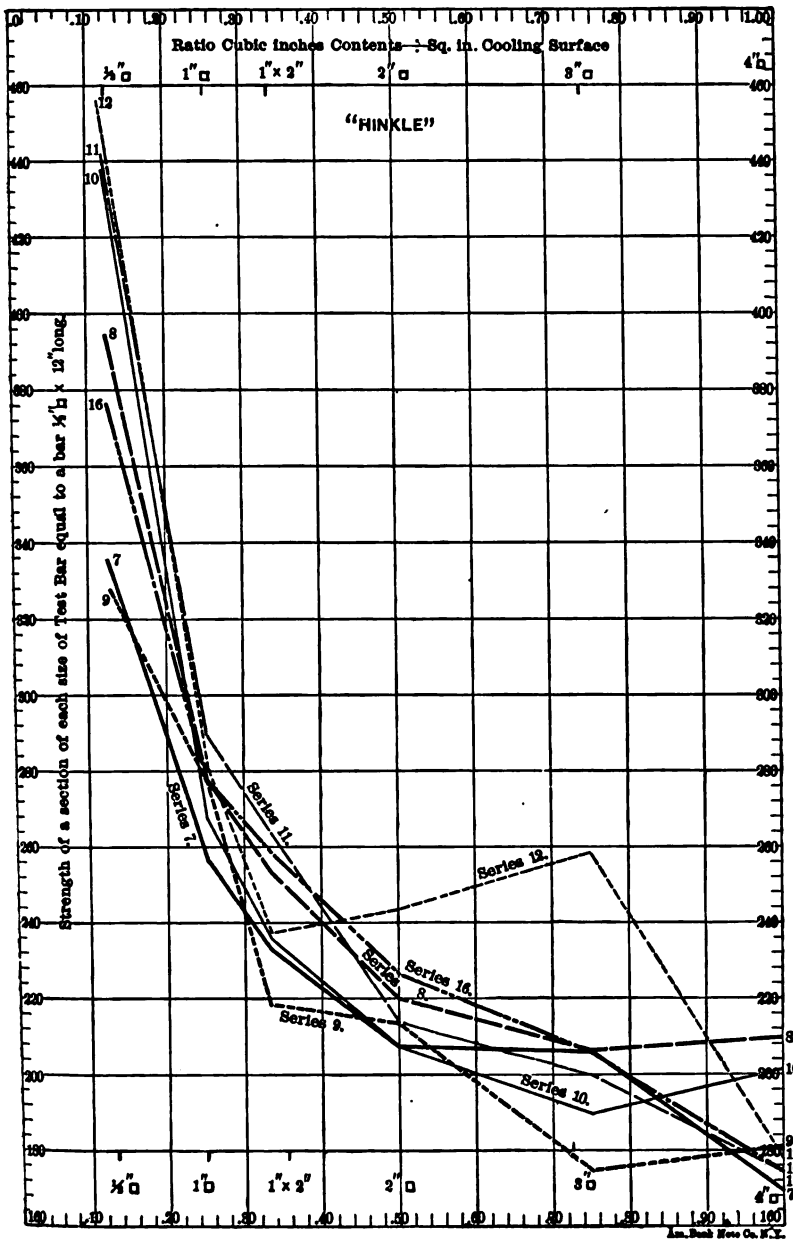

FIG. 297.

Digitized by Google

CHART III.

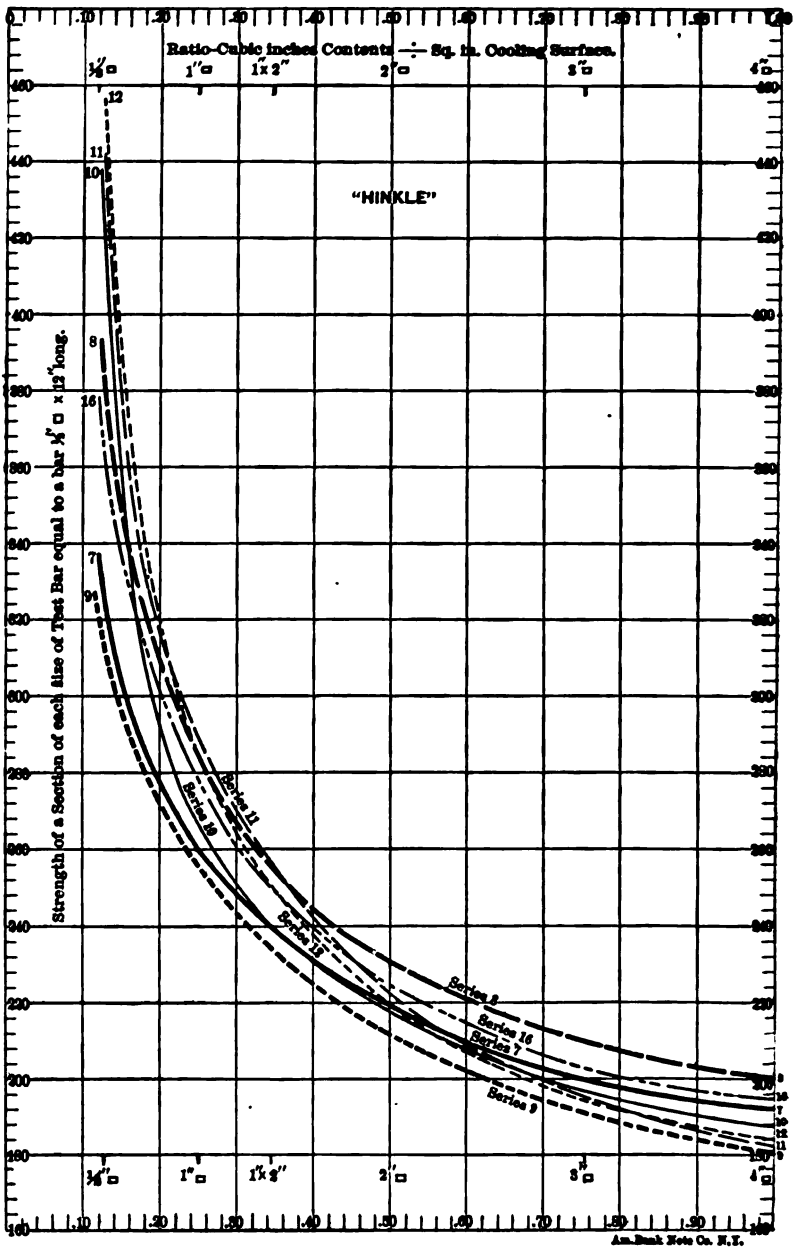

FIG. 298.

Digitized by Google

CHART IV.

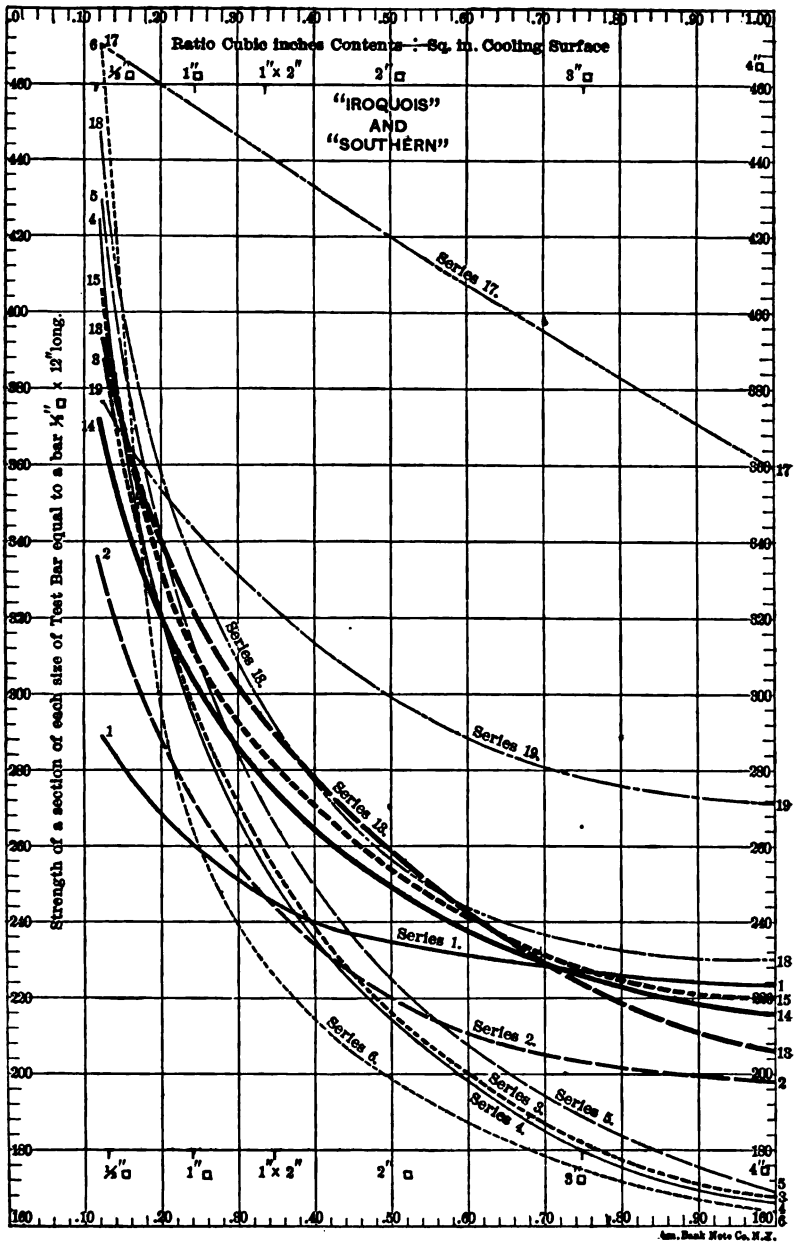

Fig. 299.

Digitized by Google

CHART V.

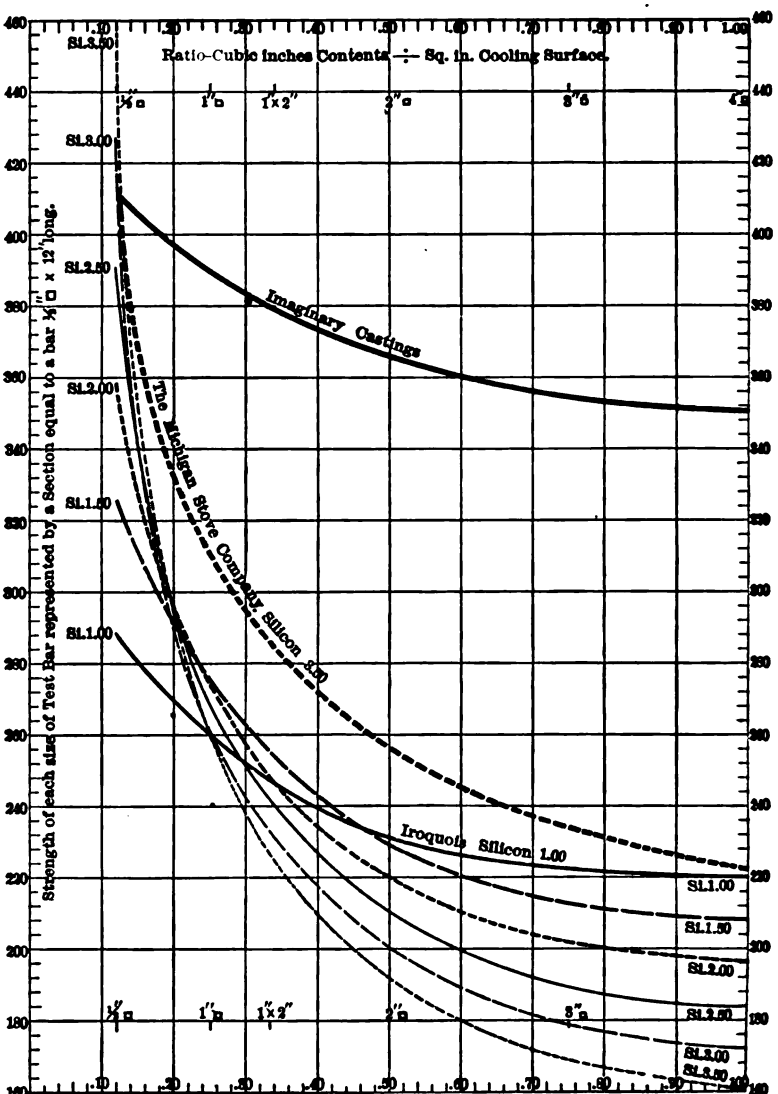

FIG. 300.

Digitized by Google

Chart IV. (Fig. 299) is a modification of Chart I., the curves having been made regular, as in the last case.

Chart V. (Fig. 300) is a modification of Chart IV., every condition having been made uniform.

As it is impossible in practical foundry work to obtain uniform conditions, this chart is ideal, and the records are therefore approximate. The iron for each of these nineteen series of test bars was melted in a cupola with coke, and the moulding was like that of ordinary castings, surrounded by the conditions which are certain to surround all foundry operations. These nineteen series are, therefore, ordinary castings taken from various foundries. Laboratory tests, under conditions as uniform as possible, were made before these practical tests were undertaken, to determine the influence of varying chemical compositions on the physical quality of cast iron.

Only such tendencies as are apparent in all of the series will be accepted as generally applicable to cast iron.

The castings of each entire series were cast from one iron mixture, melted and drawn from the cupola at once, and poured at the same time into moulds which were of uniform composition. For this reason the larger the casting the more slowly would the metal cool. Each increase in size represents a slower rate of cooling, which causes the grain to be more coarse and loosely put together in the larger castings.

METHOD OF EXAMINATION OF THESE TESTS.—The opinions regarding the strength of cast iron, which are found stated in works on metallurgy, and which are held by most founders, must have had their origin in the examination of just such castings as the nineteen series which I have produced.

I shall, therefore, show by these nineteen series how such opinions originated, and if they are incorrect, I shall prove the error from the same tests by which I explain their origin. Any new conclusions will be drawn from the same nineteen series of tests.

WHAT THESE TESTS SHOW.—As the base of all reasoning, let it, for the present, be accepted that strength is wholly dependent upon the grain. A casting may be brittle, and for that reason weak, as often occurs in small castings If the grain is coarse and loosely formed, as in large castings, weakness will result from lack of cohesion. If the grain is fine and close, as in small gray castings, they will be strong. I shall, as I proceed, furnish from these nineteen series of tests ample proof for these statements.

Digitized by Google

Strength Increases in the ½″ □ Bars with each Increase of Silicon.— These tests show this to be true, with increases of silicon as high as 3.50 per cent., and this is as high as it will be found in any ordinary foundry mixture. The castings are also softer with each increase of silicon. This also corresponds with foundry experience.

Strength decreases as castings increase in size, when both large and small castings are made from the same iron. Decrease in strength is more rapid in castings between the sizes of ½″ □ and 1″ □ than between larger sizes. The decrease grows less rapid for same differences in Si as the size increases.

Decrease in strength is greater and more rapid with each increase of silicon. In each of the charts the curve representing the strength due to the lowest percentage of silicon begins lowest on the ordinate of the ½″ □ test bar, but owing to the decrease of strength due to each increase in size of test bar the curve ends on the ordinate of the 4″ □ bar at a point much lower than that at which it began.

The curve representing the strength due to the highest percentage of silicon begins at the highest point on the ordinate of the ½″ □ bar, and because the increase of silicon causes a more rapid decrease of strength in the larger bars, the curve drops much more rapidly than the low silicon curve. This causes the distance between the curves to diminish as the size of the bars grows larger.

For example, in Chart III., "Hinkle," the total difference between the curves having the lowest and highest beginning on the ½″ □ ordinate is 129 pounds, but the upper curve drops so rapidly that it approaches the lowest curve, so that on the 4″ □ ordinate the difference is only 4 pounds. Many of the "Hinkle" curves drop entirely across others with lower silicon.

In Chart IV., "Iroquois," the curve that begins lowest at 290 pounds ends at 224 pounds. It drops 60 pounds less than the "Hinkle" curve that began lowest, but the "Iroquois" curve that begins highest drops much more rapidly than the highest "Hinkle," and ends 60 pounds below the "Iroquois" curve that began lowest. It crossed this latter curve on the ordinate of the 1″ □ bar. A 1″ □ test bar would therefore indicate the same strength for these two iron mixtures, one with about .80 per cent of silicon and the other with about 3 per cent. In the "Iroquois," Chart I., each higher silicon curve crosses all curves which present lower silicon.

Referring to Chart V., we see, as a result of these curves cross-

Digitized by Google

ing the others, that the records on the 4″ □ ordinate show that the large test bars are weaker with each increase of silicon, while the ½″ □ bars are stronger.

That increase of silicon weakens large castings is in accord with shop experience and with general opinion.

The fact that a small casting grows stronger with each increase of silicon (at least up to 3 per cent.) does not seem to have been noticed, probably because test bars of 1 □ inch area have been used. It is the experience of makers of castings thicker than 1″, that any increase of silicon softens the casting, but at the expense of strength. For large castings, therefore, it has been the practice to use the least silicon that would produce the requisite softness.

It will be seen that the six "Iroquois" series represent the mixtures suitable for all sizes of machinery castings, and that the records conform to shop experience; therefore Chart V. has been formed from this data as representing shop experience freed from all disturbing conditions, while Chart I. shows the same data, influenced by the varying conditions met with in everyday foundry practice.

In making calculations Chart V. shows what we should have, but Chart I. represents what we shall be likely to have. It is because of these variations, that cannot be avoided by the founder, that in cast iron we can only approximate, and must therefore allow a very large factor of safety.

In the examination of the strength of cast iron, the indications which are apparent in Chart V., and which are sustained by each of the other charts, may be considered generally applicable to all foundry iron mixtures.

The record of one size of test bar cannot indicate the strength of another size, for the reason that, with the same iron, aside from the local causes of derangement, any change in size, or, in other words, any change in the rate of cooling, will change the grain and strength. Each mixture of iron and each percentage of silicon will produce the best results in some one single size of casting, and not as good a result in any other size.

Gun iron, chill roll iron, and car-wheel iron will make a strong, large casting, but in a ½″ □ casting such iron would be white, brittle, weak, and hard, for it is entirely unsuitable for small castings. As an example of this, "Iroquois," Series 1, or the 1 per cent. Iroquois in Chart V., is weaker in the ½″ bar than

Digitized by Google

any other mixture on the chart, and it is stronger than any other in the 4″ □ casting. It is therefore suitable for heavy machinery castings. The 3.50 per cent. series of the same chart is the strongest in the ½″ □ bar and weakest in the larger bars, therefore such high silicon mixtures are only suitable for the lightest castings.

Instead of proving the absurdity, that a high silicon mixture is stronger than gun iron, it shows that each iron mixture is strongest for the size of casting for which it is best adapted.

The term "cast iron" does not indicate a definite composition, whose strength in a test bar, broken transversely, varies directly as the square of the height, as the breadth, and inversely as the length. The metal is strong according as its grain is coarse or fine, and this is governed by the percentage of silicon and by the rate of cooling, and by local conditions over which the founder has no control. Therefore the test records of most investigators are of little value, because they were not aware that a large casting, cut down to another size, was weaker than if cast to size, and they were not aware that an increase in silicon would strengthen a small casting and weaken a large one. Their work would be comparable with other tests if all had recorded the percentage of silicon, or the shrinkage, which would give an idea of the amount of silicon, and if they had stated whether the casting was cast the size at which it was tested, or what size it was before it was cut down to the required size. In the latter case, however, the test would be of little value, as no casting has the same grain all the way through. And then, as shown in the "Hinkle" and "Iroquois" tests, the character of the original irons, or the heat of the cupola at the time the iron was melted, would change the strength, outside of the influence of silicon or the rate of cooling.

The foregoing will partially explain the lack of agreement between tests of cast iron and the origin of the opinion that physical tests of cast iron do not indicate the compositions.

Some have conceived that the size of test bar which would give the most uniform results for all cast-iron mixtures would be the best size for a standard. The idea would be to have the least difference between the highest and the lowest record, and the greatest uniformity in results.

An examination of the actual records of both "Iroquois" and "Hinkle," Charts I. and II., shows at a glance that the 1″ □ bar

Digitized by Google

best fills these requirements. This size shows very nearly the same record for each percentage of silicon. In examining Charts III. and IV., and especially V., it is seen that as each curve crosses each of the others there will be a size of casting which will show the same strength in both a high and a low silicon iron, and that a test bar of this size would give no indication as to the difference in the metal in these two irons, but the results of such a test bar would be absolutely uniform.

The prevailing opinion is that the 1″ □ test bar is the best size, while quite a number are in favor of a bar of 1″ x 2″ section. An examination of the charts, especially V., shows that the points where the curves cross are located between the 1″ □ bar and the 1″ x 2″ bar. Both of these sizes show that the increase in silicon has made the bars weaker. The 1 per cent. "Iroquois," Chart V., contains so little silicon as to be weak from brittleness, and the series containing 1½ per cent. silicon shows strongest of the six series in the 1″ □ test bar, and the series with 3 per cent. silicon shows weakest. Professor Turner estimates from his tests with a 1″ □ bar that 1½ per cent. Si will make the strongest castings. But the maker of heavy castings knows that the 1 per cent. silicon iron will make a stronger heavy casting, and this is shown in the chart. The 1″ □ bar does not give intelligible results to him. The crossing point between the 1½ and 2 per cent. series is very near the perpendicular representing the 1″ □ bar, which would cause the same record for each of these percentages of silicon.

Thus, while the 1″ □ test bar gives results nearer together than any other size, yet for light or heavy machinery irons it does not give intelligible results. In practice, with varying foundry conditions, as in Charts I. and II., the test records of bars between 1″ □ and 1″ x 2″ will give such variable results, though near together, that they will show nothing definitely.

In Chart V. the only definite records are those of the ½″ □ bars, showing in every case increased strength for each increase of silicon, and bars of a larger section than 2″ □, which show increasing weakness with every increase of silicon. In Charts I. and II. the records of the ½″ bar are definite, while in those larger than 2″ □ they are variable. The reason for this is that the ½″ □ bar cools so quickly that it shows the natural physical character of the iron, but in all larger sizes the slower cooling brings out the influence of local conditions.

Digitized by Google

The small variation in the records of 1″ □ and 1″ x 2″ bars also shows that for castings about 1″ thick, variations of 1 per cent. of silicon in the mixture do not make much difference in the strength of the casting, and this accounts for the success of the average founder.

What we have shown will explain why these sizes of test bar have been used almost universally, and why so little satisfaction has been found in the records of such test bars. The idea was, a test bar as near as possible to the average thickness of castings made in ordinary foundries, and a test bar that would give the most uniform results. This was because the nature of cast iron has not been understood. The strongest iron is that which contains the amount of silicon necessary to remove brittleness in the individual size of casting, and to produce the closest possible grain.

METHODS FOR PRODUCING THE STRONGEST CASTINGS.—This resolves itself into methods for producing a close grain free from brittleness.

1. *Using a Low Silicon Iron for Large Castings.*—In Charts I., IV., and V. the lowest silicon iron shows the least strength in the ½″ □ test bar, on account of brittleness, but slow cooling opens the grain in the larger castings enough to turn the iron gray, and to remove brittleness. In all the charts it is seen that the low silicon irons give the weakest ½″ □ and the strongest large castings (except Series 17, which was not melted in a cupola). For a casting 2″ □ the silicon may vary anywhere between 1 and 1½ per cent. and give the greatest strength. Large castings made from low silicon irons will tend to be hard.

2. *Using Higher Silicon Irons which naturally have a Close Grain.*—By this method the higher silicon makes the casting soft, and a pig iron or scrap which has a close grain will retain such closeness in the casting Southern irons have generally closer grain than Northern iron, and charcoal iron generally has a closer grain than coke iron. Southern foundry forge, or No. 3 foundry, or Nos. 1 and 2 soft, are all close-grained irons, but with enough silicon to make very soft castings. In Charts I. and IV., Series 14, 13, and 15 are records of mixtures of all Southern iron of Nos. 2 and 3 foundry, and 1 and 2 soft. The M. S. Co. curve in Chart V. is the Series 15 of Charts I. and IV. These irons are not generally expected to make strong castings, because of the fact that they have silicon higher than is

Digitized by Google

generally found in heavy castings, and because of the opinion that silicon weakens large castings. In this mixture which produced this series the silicon is 3½ per cent., and the strength in the ½" □ bar is above 400 pounds, which is above the average. Slow cooling does not open the grain as rapidly as it did with the 3½ per cent. "Iroquois" series, and in the 4" □ bar it gives the same strength as the 1 per cent. "Iroquois." This special mixture makes stronger castings for all intermediate sizes.

In this case we have the stove-plate iron stronger for all sizes, but simply because the grain is kept close. This kind of strength costs nothing. Scrap iron and close-grained pig iron cost less than open-grained pig iron.

The first method, of using low silicon pig iron, is in most common use, and the latter method requires the knowledge that a closing of the grain produces strength, and also that a pig iron with a close grain will make a close-grained casting. If the founder has learned this, he is on the right track. In the iron "M. S. Co." with Si 3.50 of Chart V., the individual irons comprising the mixture have nothing to do with the strength. Any other brands would be as good if they produced the same grain. When the principle of keeping the grain uniform and close, and the iron soft, has been learned, pig iron from almost any furnace can be found with a suitable grain. The mixture that produces the strongest ½" □ bar with the closest grain will also show greatest strength in a casting 4" □ if the grain is kept close.

3. *Powdered ferro-manganese* is often thrown into a ladle to cause a fine granular structure.

4. *Wrought-iron borings or chips* put in the cupola along with the pig-iron will cause the grain to be close, and in this way add strength.

A rod of wrought iron is sometimes held in the spout of the cupola, so that the end may melt off and mix with the metal. An old file is sometimes melted in a ladle for the same purpose.

5. *Cast-iron chips or turnings* are sometimes placed in wooden boxes with the covers nailed on and charged along with the pig-iron, to cause an even and close granular structure in the casting. The series from Messrs. Bement, Miles & Co. is an example of this method.

The most profitable line for experiment is to find cheap practical methods for closing the grain.

Digitized by Google

The grains should be of uniform sizes and of the smallest possible dimensions.

Such metal will not produce spongy cavities or shrink-holes at enlarged parts of a casting, and there will be very little uneven tension in different parts of such a casting.

If the grain could be closed still more, we should finally obtain the result marked Imaginary Casting in Chart V.; and if the nature of the metal could be so changed that slow cooling would not open the grain at all, but leave it the same as in the ½″ bar, the diagram would be a horizontal line, and then, and only then, strength would vary as the square of the height, and as the breadth, and inversely as the length, which would be perfection, but which can never be reached in foundry practice.

To Test the Strength of Cast Iron.—The examination of the tests shown in the charts show that the ½″□ test bar indicates the natural strength of the iron, not influenced by slow cooling, and that a test of a 4″□ bar from the same mixture of iron, poured at the same time as the ½″□ bar, would show the character of the grain under the influence of slow cooling. Low silicon would give a weak ½″□ bar and a strong 4″□ bar, and higher silicon would strengthen the ½″□ bar and weaken the 4″□ bar. If any of the methods for closing the grain had been used, it would be certain that the strength of large castings would be increased, but to how great an extent could only be learned by an actual test of a 4″□ test bar. This latter is very inconvenient in the foundry, and requires a large and expensive testing machine.

The test of ½″□ bars is necessary to show the silicon and shrinkage in the castings of different sizes, and to give the natural strength of the iron.

I hope, before the December meeting, to perfect a method for obtaining the relative strength of a test bar 4″□, which can be tested as readily as a ½″ □ bar, but the experiments are not sufficiently advanced at this time to be described. Perhaps some other member of the Society may invent a method of making ½″□ test bars, having the same grain and the proportionate strength of a bar 4″□ poured from the same ladle from which the ordinary ½″□ bars are cast. If a method is found for doing this the following would be possible:

To make a strength chart make three or four ½″□ bars in an ordinary green sand mould, and an equal number of ½″□ bars

Digitized by Google

with the grain of a 4″□ bar from the same mixture. Take a standard sheet of cross-section paper, such as I have used in this paper. Plot the average strength of the rapidly cooled ½″ bars on the ordinate of the ratio .12, and on the ordinate of the ratio 1.00 plot the average record of the ½″□ bars which represent the strength of a 4″□ bar. Join these points by a curve, and it will represent the relative strength of all sizes of castings from this iron, and could be adopted as a standard. The curve 1 per cent. Iroquois, Chart V., might be the one selected.

To find the strength of a ½″□ bar, from this curve, which would represent the strength of any size of casting from this mixture of iron, divide the solid contents of the casting in cubic inches by the square inches of cooling surface to find the ratio of cooling. Find the ordinate which represents this ratio, and locate the point where such ordinate crosses the curve, and follow horizontally an abscissa to find the strength marked at the side of the chart. This will be as near an approximation as can be obtained by an actual test of a test bar of any given size.

TABLE III.

	Series.	Nominal Silicon.	Per Cent. of Silicon.						Si Av.
			½″□	1″□	1″ x 2″	2″□	3″□	4″□	
		p. c.							
Iroquois.....	1	1.00	.83	.79	.78	.82	.72	.88	.81
	2	1.50	1.09	1.14	1.70	1.33	1.10	.88	1.20
	3	2.00	1.78	1.73	1.70	1.50	2.17	2.50	1.88
	4	2.50	2.13	1.69	1.60	1.80	2.17	2.07	2.01
	5	3.00	2.42	2.65	2.40	3.36	3.67	4.67	3.19
	6	3.50	2.74	2.69	2.70	2.62	4.80	3.22	3.04
Hinkle.....	7	1.00	.91	.93	.86	.90	.85	1.12	.93
	8	1.50	1.16	1.29	1.10	1.22	1.25	1.08	1.17
	9	2.00	.93	1.40	1.05	1.00	2.15	3 50	1 67
	10	2.50	2.84	2.55	2.70	2.00	1.75	1.57	2.23
	11	3.00	2.56	2.75	2.97	2.49	2.64	2.84	2.71
	12	3.50	2.77	3 75	3.41	2.91	2 89	2.95	3.05
Southern.....	14	.....	2.70	2.80	2.81	2.79	2.94	2.81	2.81
	13	.....	3.13	3.22	3.17	3.19	3.20	3.15	3.18
	15	.....	3.29	3.50	3.52	3.48	3.75	3.42	3.51
C. G. Bretting & Co.	16	.....	1.90	1.86	1.68	1.61	1.83	1.70	.....
Mich. Mal. Iron Co.	17	.....	.81	.....	.....	.67	.86	1.24	.....
Bement, Miles & Co.	18	.....	2.29	2.09	2.24	1.82	2.06	1.88	.....
A. Whitney & Sons	19	.....	.87	.72	.78	.81	.68	.73	.....

Digitized by Google

STRENGTH AS INFLUENCED BY CHEMICAL COMPOSITION.—*Silicon* is the controlling element, and its influence has been fully explained in the foregoing pages. Table III. shows the percentage of silicon in each size of test bar.

TABLE IV.

	Series.	Per Cent. of Combined Carbon.					
		½"□	1"□	1" x 2"	2"□	3"□	4"□
Iroquois.....	1	1.46	1.25	1.05	.80	.76	.70
	2	.70	.54	.59	.56	.54	.60
	3	.48	.45	.42	.37	.34	.13
	4	.45	.48	.43	.36	.11	.50
	5	.35	.16	.20	.11	.10	.10
	6	.37	.38	.30	.15	.11	.08
Hinkle.....	7	1.24	.88	.72	.53	.52	.46
	8	.67	.44	.50	.49	.46	.42
	9	.53	.42	.50	.46	.15	.11
	10	.29	.36	.43	.37	.44	.45
	11	.32	.12	.09	.09	.08	.08
	12	.27	.09	.09	.09	.09	.09
Southern	14	.26	.15	.14	.09	.09	.08
	13	.11	.10	.09	.08	.07	.07
	15	.10	.09	.09	.09	.11	.08
C. G. Bretting & Co.	16	.49	.78	.73	.49	.58	.44
Mich. Mal. Iron Co.	17	2.85	.....	.....	2.78	1.20	1.20
Bement, Miles & Co.	18	.45	.52	.50	.24	.12	.11
A. Whitney & Sons	19	2.95	.99	.81	.81	.87	.89

Combined Carbon.—Table IV. gives the percentage of this element in each pair of test bars tested transversely. It must have been uniformly diffused in the molten metal to have produced such a uniform variation in the test bars.

It is the universal opinion that strength is mainly due to the combined carbon which the casting contains, and that weakness is caused by changing it into graphite, which mechanically separates the grains. I have accepted this opinion, and have given expression to it in former papers. This opinion originated with the makers of heavy castings, who invariably used irons with high combined carbon, which is always an accompaniment of low silicon, to produce a close grain, and great strength in a

Digitized by Google

large casting. For example, an 8-ton anvil block was made from white pig iron which contained about ½ of 1 per cent. of silicon, and the carbon was nearly all combined. This made a very strong, fine-grained, gray casting. In Charts I. and IV., Series 17 made white castings in the ½″□, 1″□, and 1″ x 2″ test bars, but the 2″□, 3″□, and 4″□ bars were very close-grained gray castings, and of extraordinary strength. In the same charts, and in Chart V., the 1 per cent. "Iroquois," with combined carbon 1.46 per cent. in the ½″□ bar, produced a stronger 4″□ bar than any other of the six "Iroquois" mixtures, which contained less combined carbon. Viewing the subject of strength and of combined carbon in the light of chemical analyses, no other conclusion could be drawn. But if the whole nineteen series of test bars are examined, we shall see that combined carbon weakens castings, and never strengthens them.

We shall proceed to prove, from these same series from which we have shown how the accepted opinion was obtained, that the decrease in strength of large castings is wholly due to loosely united crystals, and not to any change in the proportion of combined or graphitic carbon.

Combined Carbon Weakens Cast Iron.—In each of the charts we see that in the ½″□ test bars, with each increase in silicon the combined carbon is decreased, and that the strength is increased in the same proportion. In the ½″□ test-bars of Series 1 and 7, containing about 1 per cent. of silicon, the combined carbon was about 1.50 per cent., and the iron was weak because it was brittle. As combined carbon decreased in the ½″□ bars with each addition of silicon the brittleness decreased. This is shown strikingly in Series 14, 13, and 15. The ½″□ bars show the natural strength of the iron.

Combined carbon may decrease as castings are larger, but the strength always decreases. This decrease of combined carbon and of strength are both caused by the slow cooling, and the decrease of combined carbon has nothing to do with the decrease of strength.

One per cent. "Iroquois," Series 1, had 1.46 per cent. of c^d. c. in the ½″□ bar, which was about one-half white, and c^d. c. decreased in the other sizes to 1.25, 1.05, 0.80, 0.76, and 0.70. In this case strength decreased exactly as c^d. c. decreased (silicon and other chemical elements were practically uniform in each size), and as a chemist would look at it, it would appear that there could be no other reason for decrease in strength than

Digitized by Google

the decrease in combined carbon, for this is the only chemical variable.

The fact is, however, the lessening of the combined carbon made the 1″□ test bar gray, and each successive decrease of c^{d}. c. darkened the color and made the casting more ductile; in other words, slow cooling has done for the larger sizes of test bars of the series just what the increases in silicon did for the ½″ □ bars of the six series, and this should therefore have increased the strength, and it did. But the increase in the looseness of the grains on account of the slow cooling decreased the strength more rapidly than this increase of strength. Whatever the decrease in strength on account of loose crystallization was, it was lessened in Series 1 and 7 by the increase in strength due to the decrease in combined carbon, with the result that the larger bars were stronger than any others of the six series.

A further proof is found in the various series in which combined carbon is the same in each size of test bar; for example, Series 16, Charts II. and III., which was from a foundry mixture, in which the grain was closed by using No. 1 charcoal iron, "Hinkle," for softness, and good small machinery scrap to close the grain; c^{d}. c. remained the same in all sizes of test bars, but the decrease in strength follows the general law.

Another example proving the same thing is Series 2, "Iroquois," in Charts I. and IV. The silicon has been increased about .20 of 1 per cent., and in all but the ½″ □ bars the combined carbon is uniform at about .54 per cent., but slow cooling decreases strength in the large test bars, exactly the same as in Series 1. The increase in silicon has, in the ½″ □ bar, taken out brittleness, by diminishing combined carbon, and has thereby increased the strength 45 pounds. This increase in silicon causes the grain to become coarse, in the larger bars, more rapidly than in Series 1. The large bars grow weak faster in Series 2 than in Series 1, in spite of the combined carbon not decreasing in the larger bars. In Series 15, Charts I., IV., and V., the ½″ □ bar begins with 0.10 of 1 per cent. combined carbon, and there is not enough decrease in this element, in the larger bars, to make any difference in any respect, but slow cooling causes the same proportional weakening of the larger bars. The closest examination of each series shows how, from a chemical view, the opinion originated, that combined carbon controlled strength; but the same close study will not show a single proof

Digitized by Google

that it does this. But we find the most conclusive proof that the existence of combined carbon has no influence, unless to weaken a casting by making it brittle.

TABLE V.

	Series.	Per Cent. of Graphitic Carbon.					
		½" □	1" □	1" x 2"	2" □	3" □	4" □
Iroquois.....	1	2.36	2.60	2.83	3.08	3.05	3.13
	2	3.20	3.32	3.24	3.33	3.32	3.31
	3	3.21	3.28	3.32	3.40	3.36	3.55
	4	3.10	3.24	3.27	3.41	3.60	3.25
	5	3.19	3.40	3.34	3.47	3.38	3.42
	6	3.01	3.08	3.08	3.24	3.19	3.23
Hinkle.....	7	2.78	3.13	3.29	3.42	3.48	3.55
	8	3.17	3.44	3.33	3.29	3.37	3.42
	9	3.28	3.47	3.36	3.46	3.67	3.72
	10	2.91	2.87	2.86	2.84	2.80	2.82
	11	3.00	3.22	3.22	3.25	3.28	3.23
	12	3.07	3.28	3.24	3.26	3.28	3.22
Southern.....	14	2.89	3.08	3.13	3.18	3.14	3.20
	13	3.03	3.06	3.07	3.07	3.04	3.08
	15	3.03	3.01	3.07	3.06	3.03	3.11
C. G. Bretting & Co.	16	3.30	3.10	3.08	3.32	3.22	3.31
Mich. Mal. Iron Co.	17	.26	.....	.....	.24	1.90	1.86
Bement Miles & Co.	18	2.90	2.88	2.92	3.06	3.11	3.20
A. Whitney & Sons	19	.79	2.86	2.98	3.00	3.02	2.97

Graphitic Carbon.—The general opinion is that it causes weakness. The carbon in a casting, so far as has been proved, is either combined or graphitic. If one decreases the other must increase; therefore, if combined carbon produced strength, the same facts that seemed to warrant this conclusion of the chemists seemed to prove that graphitic carbon produced weakness. Again, in graphitic iron the grain was coarse, and the flakes of graphite lay between the grains, and it seemed self-evident that these graphitic flakes must of necessity separate the grains of iron and cut the casting up.

What are the facts? The same proof that has been produced in the case of combined carbon, to disprove the accepted opinion, will apply regarding graphitic carbon, and need not be repeated here.

Digitized by Google

From an examination of these series, strength or weakness seem to be absolutely independent of this element. The looseness of the grain, produced by slow cooling, so separates the grains that there seems to be more than enough room for the flakes of graphite to lie in the open spaces. It may be even doubted if the graphite ever gets between the grains to make their union less perfect. The graphitic scales seem to have formed in the spaces after the openings have been formed, and either act as a cushion, or the scales lie loosely in the cavities. This latter supposition seems plausible, from the fact that when pig iron, or a casting as large as a pig of iron, is broken, scales of graphite fall out in great abundance.

The chemist could, however, draw no other conclusion than that which has obtained general credence.

TABLE VI.

	Series.	Per Cent. of Total Carbon.						Average Per Cent.
		½" □	1" □	1" x 2"	2" □	3" □	4" □	
Iroquois.....	1	3.82	3.85	3.88	3.88	3.81	3.83	3.845
	2	3.90	3.86	3.83	3.89	3.86	3.91	3.875
	3	3.69	3.73	3.74	3.77	3.70	3.68	3.718
	4	3.55	3.72	3.70	3.77	3.71	3.75	3.700
	5	3.54	3.56	3.54	3.58	3.48	3.52	3.553
	6	3.88	3.46	3.38	3.39	3.30	3.31	3.370
Hinkle.....	7	4.02	4.01	4.01	3.95	4.00	4.01	4.000
	8	3.84	3.88	3.83	3.78	3.83	3.84	3.833
	9	3.81	3.89	3.86	3.92	3.82	3.83	3.855
	10	3.20	3.23	3.29	3.21	3.24	3.27	3.240
	11	3 32	3.34	3.31	3.34	3.36	3.31	3.330
	12	3.34	3.37	3.33	3.35	3.37	3.30	3 343
Southern.....	14	3.15	3.23	3.27	3.27	3.28	3.28	3.235
	13	3.14	3.16	3.16	3.15	3.11	3.15	3.145
	15	3.13	3.10	3.16	3.15	3.15	3.19	3.146
C. G. Bretting & Co.	16	3.79	3.88	3.81	3.81	3.80	3.75	3.806
Mich. Mal. Iron Co.	17	3.11	.....	.....	3.06	3.10	3.06	3.085
Bement Miles & Co.	18	3.35	3.35	3.42	3.30	3.23	3.31	3.326
A. Whitney & Sons	19	3.74	3.85	3.79	3.81	3.89	3.86	3.823

Total Carbon.—The bearing of total carbon on the question of strength is very interesting. The series described in this paper do not present enough data to form any conclusions. The only

Digitized by Google

way to make comparisons is to compare series containing exactly the same silicon, and otherwise substantially having the same chemical composition. Then it would take a large number of tests to prove anything, for any influence that would cause the grain to be close would increase strength independently of chemical composition, and *vice versa*. It is very difficult to make laboratory experiments on carbon in cast iron and preserve uniformity in the rest of the composition. It will not answer to add wrought scrap, for this will not only decrease carbon, but at the same time the percentage of every other element; and also because such scrap will close the grain and increase strength, independently of the lessening of carbon. It is therefore impossible to form an opinion on this subject at the present time.

TABLE VII.

	Series.	Per Cent. of Sulphur.					
		½″□	1″□	1″ x 2″	2″□	3″□	4″□
Iroquois	1	.056	.054	.050	.046	.049	.041
	2	.046	.040	.040	.039	.039	.039
	3	.032	.030	.030	.033	.036	.030
	4	.045	.046	.047	.040	.044	.044
	5	.017	.021	.027	.031	.030	.030
	6	.034	.033	.034	.033	.028	.028
Hinkle	7	.029	.030	.031	.033	.030	.030
	8	.015	.011	.010	.011	.010	.009
	9	.015	.011	.009	.010	.010	.007
	10	.021	.019	.017	.019	.020	.022
	11	.030	.027	.025	.030	.022	.027
	12	.031	.030	.033	.026	.029	.025
Southern	14	.093	.096	.100	.092	.094	.090
	13	.091	.095	.091	.093	.091	.090
	15	.088	.093	.088	.089	.087	.089
C. G. Bretting & Co.	16	.025	.030	.031	.029	.030	.029
Mich. Mal. Iron Co.	17	Average, .031 per cent.					
Bement Miles & Co.	18	" .052 " "					
A. Whitney & Sons	19	" .101 " "					

Sulphur.—These nineteen series bring out many interesting facts regarding this metalloid. The universal opinion seems to be that sulphur is a damage to cast iron. I started to prove from the nineteen series how opinions, as they exist, originated,

Digitized by Google

and have thus far succeeded; but in this case of sulphur we can find nothing to show a ground for the origin of the opinion that prevails. Sulphur is not by any means uniform in the nineteen series, but there is not the least indication of evil result from its presence in the series containing the highest sulphur. The variation between the sulphur of Series 5 and 6. "Iroquois," or between 4 and 5, is enough to influence grain or strength, if the general opinion is correct, but those with the highest sulphur show the most open grain and are the softest. In "Hinkle," Series 7 and 8, the curves are parallel, and sulphur does not exert any evil influence. In Series 14, 13, and 15 the sulphur is about as high as is ever found in gray castings, and yet these series show both small and large castings beyond reproach. No chill, no blow-holes, very low shrinkage, and very high strength. The high strength can hardly be ascribed to the high sulphur, for strength does not increase with any uniformity as sulphur increases.

TABLE VIII.

	Series.	Per Cent. of Phosphorus.					
		½" □	1" □	1" x 2"	2" □	3" □	4" □
Iroquois.....	1	.211	.213	.214	.215	.216	.216
	2	.273	.269	.270	.271	.272	.270
	3	.270	.267	.268	.267	.266	.267
	4	.284	.283	.281	.280	.283	.281
	5	.333	.331	.330	.327	.325	.329
	6	.300	.299	.296	.298	.297	.299
Hinkle.....	7	.201	.199	.197	.199	.198	.200
	8	.164	.161	.163	.163	.160	.161
	9	.258	.260	.253	.251	.250	.261
	10	.211	.218	.218	.220	.222	.219
	11	.264	.275	.275	.300	.255	.283
	12	.301	.296	.295	.300	.299	.303
Southern.....	14	.809	.801	.795	.800	.804	.797
	13	.826	.828	.830	.817	.830	.825
	15	.980	.975	.973	.972	.971	.973
C. G. Bretting & Co.	16	.309	.330	.327	.325	.328	.330
Mich. Mal. Iron Co.	17	Average, .222 per cent.					
Bement, Miles & Co.	18	" .342 " "					
A. Whitney & Sons.	19	" .353 " "					

Digitized by Google

TABLE IX.

	Series.	Per Cent. of Manganese.					
		½" □	1" □	1" x 2"	2" □	3" □	4" □
Iroquois.....	1	.35	.36	.37	.35	.34	.36
	2	.31	.30	.30	.31	.30	.32
	3	.50	.51	.49	.46	.51	.48
	4	.35	.30	.32	.33	.34	.35
	5	.36	.39	.38	.37	.37	.38
	6	.43	.45	.41	.40	.44	.43
Hinkle.....	7	.47	.44	.46	.47	.45	.48
	8	.37	.34	.37	.36	.35	.37
	9	.48	.47	.44	.49	.47	.51
	10	.63	.71	.43	.43	.47	.44
	11	.58	.74	.71	.58	.64	.54
	12	.59	.56	.53	.56	.54	.61
Southern..	14	.59	.60	.62	.60	.59	.64
	13	.43	.48	.43	.47	.40	.41
	15	.50	.49	.50	.50	.49	.51
C. G. Bretting & Co.	16	.57	.38	.37	.38	.36	.38
Mich. Mal. Iron Co.	17	Average, .363 per cent.					
Bement, Miles & Co.	18	" .354 " "					
A. Whitney & Sons.	19	" .350 " "					

Tables VIII. and IX. give the percentages of phosphorus and manganese in each bar of each series, but the variation is too small to allow of an opinion regarding these metalloids.

These results of chemical determinations are given in this paper to show the composition of the castings. The question of chemical analysis and its bearing on mixtures of cast iron will be treated by Mr. Dickman in the committee's report.

The question of tensile strength and of the use of test bars of other shapes will also be treated by members of the committee most competent to handle these subjects.

The presentation of the foregoing paper on transverse strength, before the committee are ready for a final report, is for the purpose of giving a more correct knowledge of cast iron.

DISCUSSION.

Prof. J. B. Johnson.—The author has given us some very remarkable results here, especially as showing the influence of silicon, and he seems to prove the proposition. Now, I wish to

Digitized by Google

question the correctness of his logic. He says, very decidedly, that these tests show that the ultimate strength of cast iron does not at all follow the law of the ordinary formula, as being proportioned to the square of the depth, directly as the width and inversely as the length. Well, that, of course, we know. Now, when he has granted that, the very foundation of his argument has dropped from under it, because all of these strengths, on bars, from one-half inch square up to four inches square, have been reduced to equivalent strengths at one-half inch square by these same formulæ which he says cannot be credited. How does he get the equivalent strength of a half-inch cross-section from a one inch, one by two inch, three inches square, or four inches square cross-section? How does he find the equivalent strength of a half-inch cross-section from these larger tests, except by using the ordinary formula? He does not say that he has used it, but I take it that he has used the ordinary formula.

Mr. Keep.—The ordinary formula? Yes, sir.

Professor Johnson.—Now, if there be anything in the composition which causes the ordinary formula to be more correct in one size than it is in another size—as, for instance, the introduction of silicon—if that causes the discrepancy, whatever it be, we have a further error introduced by applying an erroneous formula; if that effect be different for large sizes from what it is for small sizes, then we may trace all of these results, perhaps, directly to the erroneous formula used in his deductions. I have had some experience in studying the effect of silicon on cast iron, and I have always found (my tests were made in tension, with an instrument for measuring the elongation or stretch with a very delicate apparatus) that a silicon iron is much more ductile, or it stretches very much more than an iron which is low in silicon. Very well. Now, what causes the error in the formula $f = \frac{3}{2}\frac{Wl}{bh^2}$, where f = the so-called tensile stress on the outer fibres, W = load at centre, l = length, b = breadth, and h = height of specimen? Please understand that in all of these tables he has given us, where he has reduced to equivalent strength of half-inch specimens, he might just as well have given us the modulus of rupture per square inch, f, in every case, so that we might think of all these values as being the old familiar modulus of rupture, which we know is from 36,000 to 40,000 pounds in cast iron which has a tensile strength of 20,000 pounds. What we call tensile strength on the extreme fibre is

Digitized by Google

really about twice the actual tensile strength, so that the error is enormous. Now, what causes that discrepancy between theory and practice? If the material were perfectly elastic up to rupture there would be no discrepancy. That, I think, scientific men are perfectly agreed upon. That is, the formula is true inside the elastic limit, and if the elastic limit were the rupturing limit, then it would be true up to rupture. Now, since the formula fails because the material is not perfectly elastic, and because a tensile strain diagram is a curved instead of being a straight line to rupture, it is evident the more ductile the cast iron the more the error in applying the formula; that is, a kind of iron which is more plastic and gives a greater development of the horizontal part of the curve is the iron which will show the greatest error on applying the ordinary formula to it at rupture. Now, the highly silicated iron develops a much longer horizontal component of the curve than an iron low in silicon. Then that is the very iron which, if the ordinary formula is applied to it at rupture, will give the greatest error—that is, it will develop the greatest strength of the extreme fibre. If, therefore, the formula of reduction involves a greater error for highly silicated iron than for low silicated iron, then may not this wonderful difference in the apparent transverse strength of cast iron varying so much in silicon be largely due to the varying error introduced by the application of the formula? I am afraid it is probable that that is so, and therefore I am not willing to accept a transverse test of cast iron as any evidence of the true tensile strength of the iron. The so-called transverse strength of cast iron has no existence in fact. What we figure out as 30,000 and 40,000 pounds to the square inch stress on the extreme fibre is a fiction. There is no such thing in fact. There is no tensile strain of 40,000 pounds to the square inch anywhere in the bar, and, therefore, it is a mere conventionality. Now, the only way, it seems to me, to determine what effect either molecular change, crystallization, or chemical change has to do with the real strength of the iron, is, in my opinion, to make tensile tests of varying sizes. I think we can, and that it ought to be done; and this committee would do well to take up that subject, and if this method of making tests produces the same thing, then I would agree that the result is wholly due to the composition and the crystalline form, or something of that sort.

Mr. J. L. Gobeille.—I would like to ask what we care about the tensile strength of cast iron. What do we use it for?

Digitized by Google

Professor Johnson.—I will answer that. In studying the effects of the chemical composition on strength, we must use tensile strength because the tensile strength is the only strength it has which concerns us. Compressive strength is, of course, far beyond what we need. It is the tensile strength which gives us the cross-breaking strength. But we cannot determine the actual tensile strength by the cross-breaking test, and we want to eliminate these errors, which necessarily creep in from a variation in size in the cross-breaking specimens, if possible.

Prof. R. C. Carpenter.—This matter strikes me in a very different way from what it does Professor Johnson. It does not seem to me that it makes any great difference to us what the theory regarding the breaking of cast iron may be. The desired thing with us at present is to have a theory which will agree practically with our results. A rational theory can be produced when sufficient data are collected. It does not seem to me that the tensile strength of cast iron is of very much importance in practical application. If it were important it would be a difficult thing to determine it accurately in a testing machine, because of the brittleness of the iron. It is difficult to hold specimens in a testing machine so that they can be broken fairly and truly; but even if we had such results, I do not know where, in practice, they would be of very much value to us. Now it is certainly true that the coefficient which we get for transverse strength is not the same as the coefficient for tensile strength, and we could look for no agreement, since the coefficiencies of transverse strength are applicable only to highly elastic bodies and to those in which the neutral axis occupies an assigned position. It seems to me we might as well base our work on transverse as on tensile strength, and let the theory go until it can be made to adjust the difference pointed out by Professor Johnson. Mr. Keep's work will, in my opinion, do much to throw light on this matter.

Professor Johnson.—I claim that we shall. We shall come nearer to the real tensile strength for brittle than for tough or ductile cast iron. You may have two kinds of iron, both having a tensile strength of 20,000 pounds; one, being brittle, will have a cross-breaking strength of 30,000 pounds; another, being tough and ductile, will have a cross-breaking strength of 40,000 or 45,000 pounds. So that this introduction of silicon, which produces this change, also causes the wide difference in relationship between the tensile strength and the cross-breaking strength, and,

Digitized by Google

therefore, may produce the very results which the author has credited wholly to another cause.

Mr. Gus. C. Henning.—I would like to say that the committee has been very careful to observe the elastic behavior of these bars just as well as the ultimate strength; that the committee is not concerned with the strength of cast iron; that the committee is mainly concerned with devising methods by which cast iron can be tested. We have tension pieces which can be tested as soon as we get to them. We do not know whether the transverse test or the tension test is right, but we do know that we have these results. We know that the half-inch bars and all intermediate bars are plotted in the same way on the basis of deduction from the breaking strength. Whether that is right or wrong has nothing to do with those bars, because the diagrams are all produced in a similar manner. If the method is wrong because the formula does not hold, that does not necessarily vitiate these curves. It may vitiate the exact termination of the curves and the points between, but the proportionate changes will be the same. So I do not care what the results are. But the committee thinks that the general character of the curve is very indicative of certain things that have been observed. We have no results as yet on tensile tests, so I do not think that any one has a right to say that "he thinks he will get better results," when he has not had any experience in that direction. We have had experience with transverse tests, and if you will only give us time we will find out whether we will have to discard these or whether we can go on and arrive at some results. These papers are Mr. Keep's monographs, based on work done for the committee; they are not the committee's report; and when we get all our figures together the committee will say whether its work is all for nothing or whether a new method for making tests can be suggested. I know, in regard to the tension test, that there is only one machine which will give correct results. In spite of the good qualities of many others, they cannot make correct tests unless a tower is built above them, and to attach the test piece to a long rod, so that there is no possible way of producing a lateral strain. If that is not done you cannot test the cast iron in tension and get results worth having. But the committee is going to find out whether all this work will lead to a true indication of the properties of cast iron.

Professor Carpenter.—It seems to me that the difference in these results, due to this change of form, length, and size of test

Digitized by Google

specimens, has been very much magnified. I looked over the figures underlying the results of this paper quite carefully at one time, and I thought that they ran as nearly in accord as one could possibly expect. These figures, I see, do not accompany the report as published.

Mr. D. L. Barnes.—I think we are indebted to Professor Johnson for starting this very good discussion, and I would like to ask him a question, that is, if he has taken the actual extension curve, and calculated the transverse breaking strength of the specimen? I have done this for steel, and reached some very satisfactory results. With your permission I would like to present a diagram showing what I mean. The ordinary formula

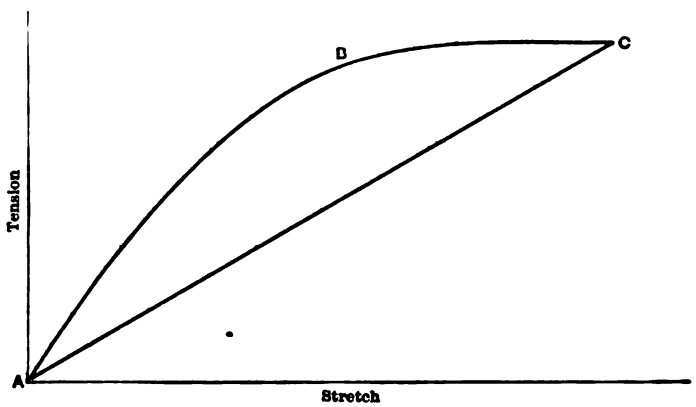

FIG. 301.

assumes an extension curve like AC (Fig. 301), in which the extension is measured horizontally and the tensile resistance vertically. The true extension curve, as shown by Professor Johnson, is something like ABC. Taking, now, a specimen, and putting a point of support at each end (Fig. 302), and applying the load in the centre, the formula assumes a stress on the different fibres represented by the straight line AC. The true stress on the fibres is represented by a line something like ABC, ending at the same point as the straight line. Now, by multiplying the stress on these fibres by the distance from the centre and by the area of each point of the section, we get nearer the true calculated strength of the specimen. Now, in some cases of steel, round and square sections, I find that the strength shown by the calculation

Digitized by Google

that I have indicated is almost exactly that shown in the testing machine.

I would like to ask Professor Johnson if he has made any calculations of this sort that check up (taking his tensile strengths as a basis) with the observed strength of cast iron under a transverse test?

Professor Johnson.—Yes, sir. By taking both the tensile and the compressive strain diagram, plotting the one on the one side, as Mr. Barnes has done, and the other on the other side, equating the two areas—those two areas must be equal—and, by keeping them equal, making use of the diagrams—the moment of resistance is made up of one of these areas into the distance between the centres of gravity of the two, and working out the

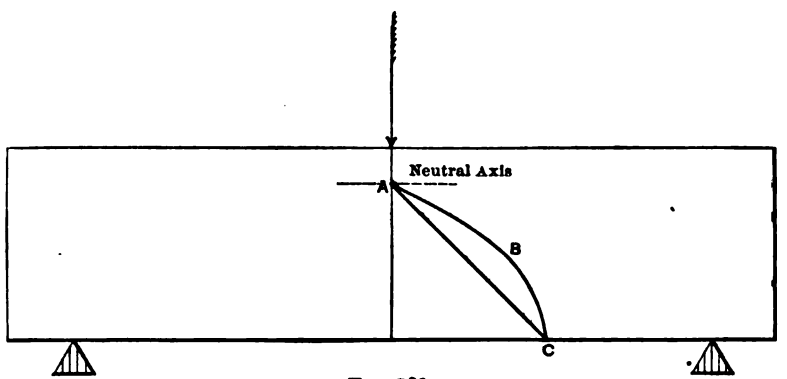

FIG. 302.

moment of resistance; in that way you can show that the strength of the beam is just what it proves to be; so that you can make theory and practice agree.

Mr. Henning.—And the formula holds good at the point of fracture, according to that?

Professor Johnson.—Yes, sir.

Mr. Henning.—Then it does hold good?

Professor Johnson.—No, not the ordinary formula; but a formula which would be adapted to these curves would hold good at the point of fracture.

Mr. A. Sorge.—It strikes me that an attempt is being made to introduce theorizing into a matter upon which gentlemen who have had considerable experience are now working for us on this committee. We know that we do not want to use cast iron for a

Digitized by Google

tensile member in any case. We may know that it is amply strong for a compression member. But we are not always certain of it where we have to use it under transverse strains; and as all the testing work hitherto, in foundries, has been done with transverse tests on cast iron, it seems to me that the committee is working in the right direction in that way. In case theory and practice do not harmonize, I should certainly desire to reject theory. If we will complete our theory after the committee gets through with its actual tests, instead of attempting to harmonize the tests of steel with those of cast iron—steel being used for tensile work, and cast iron for compression and transverse work—I think we will be working more in the direction that is actually required in practice. As Mr. Keep has shown in his paper, for the various sizes of specimens which he has tested there are variations which are not directly explainable by our present theories. As Mr. Henning has suggested, let us give the committee a chance to tell us just what they are doing, and afterwards we can theorize on the subject.

If cast iron is to be used under tensile strain, as, for instance, in a steam-engine cylinder, then we can readily deduce the tensile strength from a test of transverse strength, by reversing the ordinary method employed for determining the transverse strength of a beam, when the dimensions and tensile strength are given.

As the character of the iron is different in a four-inch square test bar from that in a one-inch square bar, we must take the test bar whose character most nearly conforms to that of the casting we are figuring on; otherwise we will make a mistake similar to that which would occur if we determined the strength of an ingot directly from the proportionate strength of a fine wire produced from this ingot.

Mr. Keep.—To find the relative strength of test bars of different sizes the strength of a unit of each must be found. The unit which I have selected is one foot long and one-half inch square. The formula is $w = \frac{Wl}{bh}$. For a test bar 3 inches square by 2 feet long, with strength 25,200 pounds, $w = \frac{25{,}200 \times 2}{6 \times 36} = 233$ pounds. Professor Johnson objects to the use of this formula. If the grain of each size of test bar had been the same, this formula would have given the same strength per unit; but the grain grows coarser as the size increases, and for this reason the strength per unit de-

Digitized by Google

creases. The application of this formula is a simple reduction of area, and shows the relative decrease in strength due to slower cooling, caused by an increase of size.

The relative variation in strength of test bars of the same size, caused by an increase of silicon, can be seen in the actual strength of the bars, Table I., or by the strength per unit, Table II. The trength per unit of the 3-inch square bars is found by dividing each actual strength by 108. Both of these tables show that an increase of silicon weakens large bars and strengthens small bars. Professor Johnson doubts this, but says that if the committee will make tensile tests of varying sizes of test bars, and if such tests produce the same result as the transverse tests, he will agree that the result is due to composition, and the crystalline form.

The following are the tests that he asks for:

TABLE X.

Iron.	No. Series.	Av. per cent. Silicon.	Tensile Strength per □″ of Test Bar.	
			Area 1.10 □″.	Area .375 □″.
Iroquois..... ...	1	.81	20,000	15,700
	2	1.20	20,580	22,300
	3	1.88	25,050	20,450
	4	2.01	21,850	19,350
	5	3.19	22,425	19,750
	6	3.04	25,550	16,700
Hinkle	7	.93	18,950	17,700
	8	1.17	17,700	15,350
	9	1.67	.....	14,800
	10	2.23	.....	.....
	11	2.71	.....	17,000
	12	3.05	17,700	17,500
Southern.....	14	2.81	14,000	21,300
	13	3.18	23,525	20,500
	15	3.50	24,400	20,300

Table X. gives the tensile strength per square inch (per unit) of two sizes of bars made at the same time as the transverse bars shown in Tables I. and II.

The Iroquois and the Southern series show exactly the same results as the transverse tests, viz., that an increase in size enlarges the grain and weakens the casting; and that, as silicon increases, large castings grow weaker, and small castings grow stronger.

Digitized by Google

Professor Johnson says that the correct transverse strength of cast iron can be computed from the tensile strength, but not *vice versa*. It seems strange that the rule will not reverse.

Theory and practice will be in perfect accord when the nature of cast iron is understood. Formulæ or graphic methods will be arranged, by which the strength of one size of test bar can be computed from that of another size.

The committee have authorized the presentation of this series of monographs on the character of cast iron, to show a reason for their conclusions regarding methods of testing.

Digitized by Google

DCLVI.*

KEEP'S COOLING CURVES†—A STUDY OF MOLECULAR CHANGES IN METALS DUE TO VARYING TEMPERATURES.

BY W. J. KEEP, DETROIT, MICH.

(Member of the Society, and of its Committee on Standard Tests and Methods of Testing Materials.)

IN a paper read before this Society last December ‡ I endeavored to show that a measure of the shrinkage would indicate whether a mixture of cast iron needed more or less silicon. In my reply to the discussion of that paper I made the following statement: "The question has been raised whether cast iron expands at the instant of solidification. There is no such instant. Each crystal forms and shrinks on itself, and even if it did expand, it is not until such crystals are numerous enough to form a rigid shell that

---

* Presented at the Detroit meeting (June, 1895) of the American Society of Mechanical Engineers, and forming part of Volume XVI. of the *Transactions*.

† The discovery of these cooling curves was made too late to allow a full chemical analysis to be made of each of the test bars, but it seemed a matter of so much importance in the future study of iron and steel that this preliminary paper is presented to the Society, by the writer, on behalf of your Committee on Standard Tests and Methods of Testing Materials.

The temperature at which the change in curves takes place will be determined as soon as I can arrange the patterns to cast the holes necessary to receive the couples of the pyrometer. Messrs. Dickman and Mackenzie have volunteered to make all necessary analyses to determine the relation of chemical composition to the expansions.

Mr. E. E. Mains, chemist of The Detroit Steel and Spring Works, has made the determinations which are now given, which very materially add to the interest of this paper. His company made the bar of mild steel casting shown in Chart I. The Michigan Bolt and Nut Works of Detroit, who heat their furnaces by crude oil, made Curves 11a and Nos. 31, 32, 33, 34, and 35 from rolled iron and steel. The Michigan Malleable Iron Company of Detroit, who use only charcoal iron, made Curve No. 10 from the white iron that they pour into castings for malleable iron.

Mr. Henry Penton, draughtsman of The Frontier Iron Works of Detroit, has done much to help along this work by duplicating drawings.

‡ This investigation was undertaken at the suggestion of the committee, made at a meeting held on December 5, 1894, at which the question of expansion of cast iron was discussed, without reaching any conclusion.

Digitized by Google

the casting can shrink, and any expansion of each crystal could not affect the whole casting." The following investigation was made to prove the truth or error of this statement.

Does each Crystal Expand as it Forms?—When cast iron enters a mould a thin skin of solid iron is instantly formed by the cooling

FIG. 803.

action of the sides of the mould. This is proven by breaking a casting which is still fluid; the central portion will run out, but the skin will settle on the surface of the metal which remains, but will retain its own integrity. Having once formed, the heat of the metal can never melt it again, though at first it has no rigidity, but is apparently in an amorphous condition. New crystals form on the interior of this skin very rapidly, and as the mould prevents

Digitized by Google

any expansion outward, if there was any expansion it would be inward, which would lessen the holding capacity of the interior. This skin in a few seconds becomes rigid. The fluid interior is contained in a rigid shell of the same metal at practically the same temperature as the melted portion. Fig. 303 shows the top of a runner from a blast furnace pig bed, the molten inside having run out. The individual crystals must be of the same form as the aggregations, which are regular octahedrons. The edges of the largest are $\frac{5}{8}$″ long. The mounted sample is perfectly regular, each edge $\frac{1}{4}$″ long, and was obtained at another time. Each aggregation has formed independently of others, and all are attached to the outer shell.

When the sprue has a shell formed on its top surface, if a hole is broken through it the currents of the molten metal can be seen, but no metal ever exudes; but, on the contrary, if the casting is of any considerable size the fluid metal will sink, and to produce a full casting more fluid metal must be fed to it. This proves that the fluid metal does not expand as it loses heat, and it also proves that each crystal does not expand, at least not so fast as to overcome the general shrinkage from loss of heat.

Autographic Record of Shrinkage.—Fig. 304 is a cut of the machine by which this record was made. A mould is made of a test bar 1″ □ by 26″ long. In the front of the flask, near the ends of this mould, recesses are cut to allow the ends of the mould to be reached. The top of each end of the mould is covered with a piece of tin having a $\frac{1}{4}$″ round hole through it, the two holes being 24$\frac{1}{2}$″ apart. The autographic machine is attached to the mould in each recess by a $\frac{1}{2}$″ round pin which projects upwards to form a bearing for the arms which are to transmit the motion of the test bar. The inner end of each arm is 2″ long, and the outer end is 20″ long. Through the inner end of the arms is a $\frac{1}{4}$″ hole corresponding with the hole in the tin cover of the mould. Through each of these is passed a $\frac{1}{4}$″ pin of Stubbs steel. The inner end of this pin projects downward through the mould. This pin is located at the front edge of the mould, so that the first skin formed shall embrace it. The outer ends of the arms multiply any motion of the ends of test bar ten times. The right-hand arm moves a slide which carries a recording pencil, and the left-hand arm moves a slide upon which is located a cylinder which contains the ruled record paper, and also carries a clock which allows the cylinder to turn once each hour. The paper is ruled in

Digitized by Google

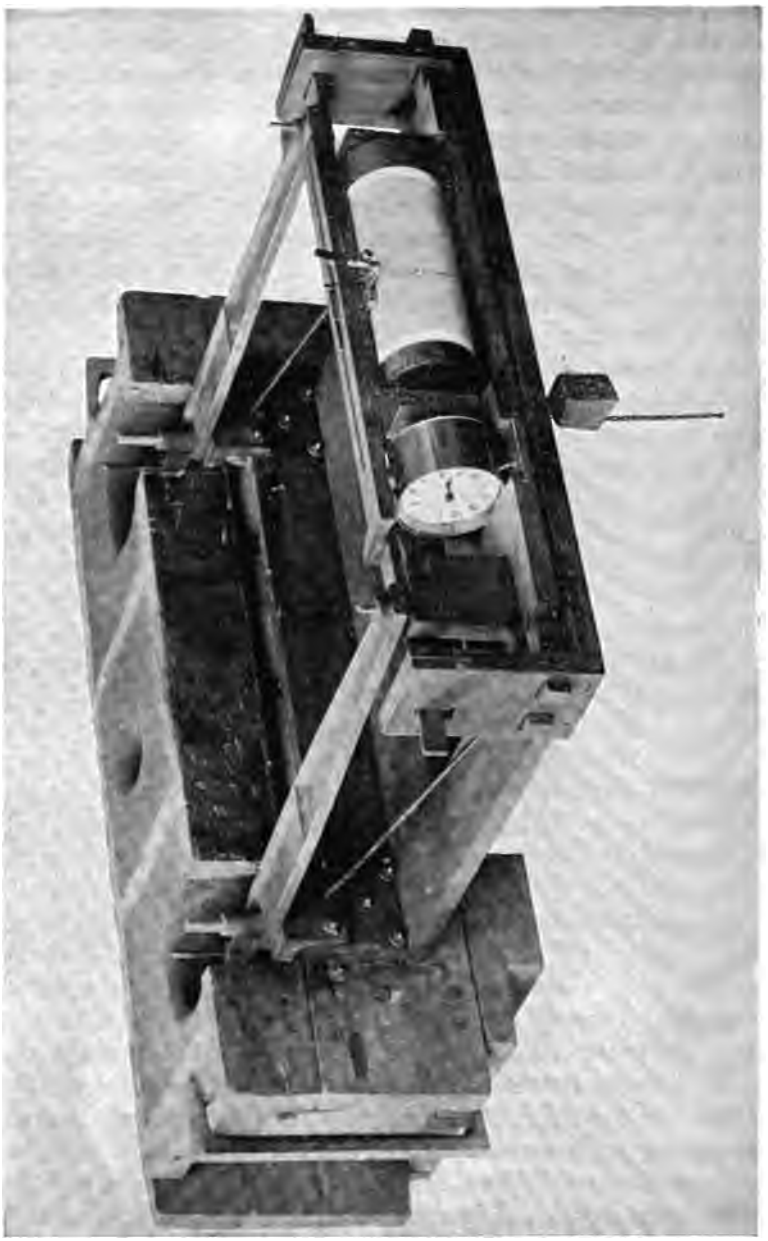

FIG. 804.

Digitized by Google

1″ squares, each divided into twentieths. The cylinder has a circumference of 12 inches, which makes each inch measured circumferentially on drum equal to five minutes of time. As one arm moves the pencil and the other moves the slide which carries the cylinder and clock in an opposite direction, the record is the sum of the motions of the two ends of the test bar, and as this is 2 feet long, to find the motion of the test bar per foot of length, the record must be divided by 20. If the record shows a motion of the pencil to be half an inch, or ten of the small divisions, the motion of each end of the bar would be $\frac{1}{4}$ of one division, or $\frac{25}{1000}$.

The frame of the machine is of wood, to prevent expansion or contraction, and the apparatus with the test bar is entirely self-contained.

Shrinkage Curves.—As metals expand as they receive heat, and shrink in proportion as they lose heat, the record of such simple shrinkage should be a curve showing these proportions. Chart I. shows such curves from the most common metals. A shrinkage takes place while the metal is still fluid which causes the metal in the gate to sink, yet the pins in the end of the test bar will not move until the casting is solid, and such shrinkage in the fluid metal cannot alter the size of the casting. The curves show the length of time it took each metal to become solid. Block tin remained fluid 11 minutes, while lead was fluid only $2\frac{1}{2}$ minutes. As soon as the 1″ □ bar becomes solid the shrinkage of the test bar begins.

Yokes for Chilling and Fixing the Length of Test Bars.—Holes to receive the pins of the machine were drilled in each end of a yoke, and a test bar 1″ □ was cast, its ends running against the ends of the yoke. Curve *ab* on Chart I. (Fig. 305) shows the motion of the ends of the yoke. The bar connecting the ends of the yoke is 1″ □, or the same size as the test bar, and there is 1″ of sand between them, but the diagram shows that the yoke expanded at once when the iron filled the mould. Curve No. 2 is from a 1″ □ test bar, cast with its ends against the yoke, the pins in this case being in the test bar. The ends of the test bar did not move for one minute, so that the chilling against the yoke ends was instantaneous, for the yoke expanded away from the bar at once, and never came in contact with it again. Curve No. 3 is from the same iron mixture, from a bar cast in sand without a yoke. The curves show the variation in No. 2 on account of the cooling action of the yoke. All of the test bars made for the Society's

Digitized by Google

Committee on Methods of Testing were made in yokes, and all bars were shaken out of the moulds at once. In all the bars larger than 1″ □ the expansion of a yoke would be much greater than for a bar 1″ □, for the reason that the bar connecting the heads of the yoke was always 1″ □ and 1″ from the test bar, and the larger test bars would, therefore, heat it more quickly and to a greater extent. The ½″ test bars were cast in a yoke with a ½″ □ bar connecting the yoke heads, but in each case the ½″ test bar shrinks away at once (see Curve No. 18, Chart III.), and could never touch the yoke after the instant that mould was filled.

Curves from Cast Iron.—These vary in shape with change in chemical and physical composition. Iron with silicon quite high

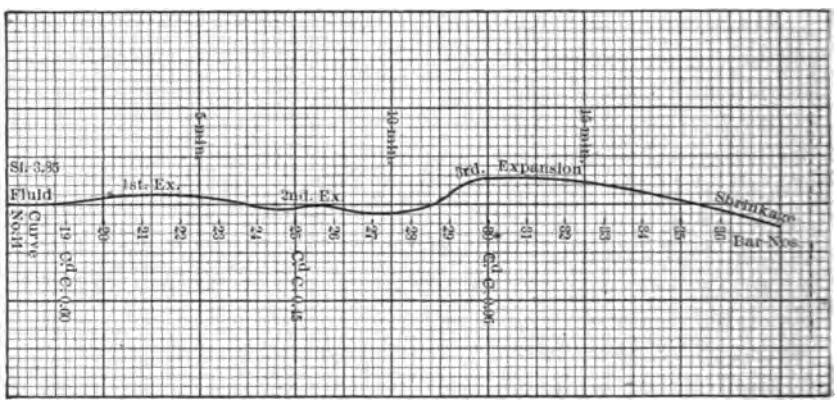

FIG. 306.

makes the most attractive curve, and Curve 11, Fig. 306, is therefore taken as an example. The silicon was 3.85 per cent., P 1.00, S 0.10, Mn 0.50. The carbon is about 3.10, which is low. This is a mixture which gives excellent results for thin castings which are very strong and soft. The lower the carbon the higher must be the silicon to produce soft castings. The curve shows that the casting remained fluid for 1 minute, during which time the ends of the bar remained stationary. When the whole of the test bar had become solid it expanded for 16 minutes. The expansion began 1½ minutes after the mould was filled, increased until 3½ minutes, then decreased until 7 minutes. This I name the *1st Expansion*. The expansion then increased until 8 minutes, and decreased again until 10 minutes. This I call the *2d Expansion*. A very great expansion then takes place, reaching its maximum

Digitized by Google

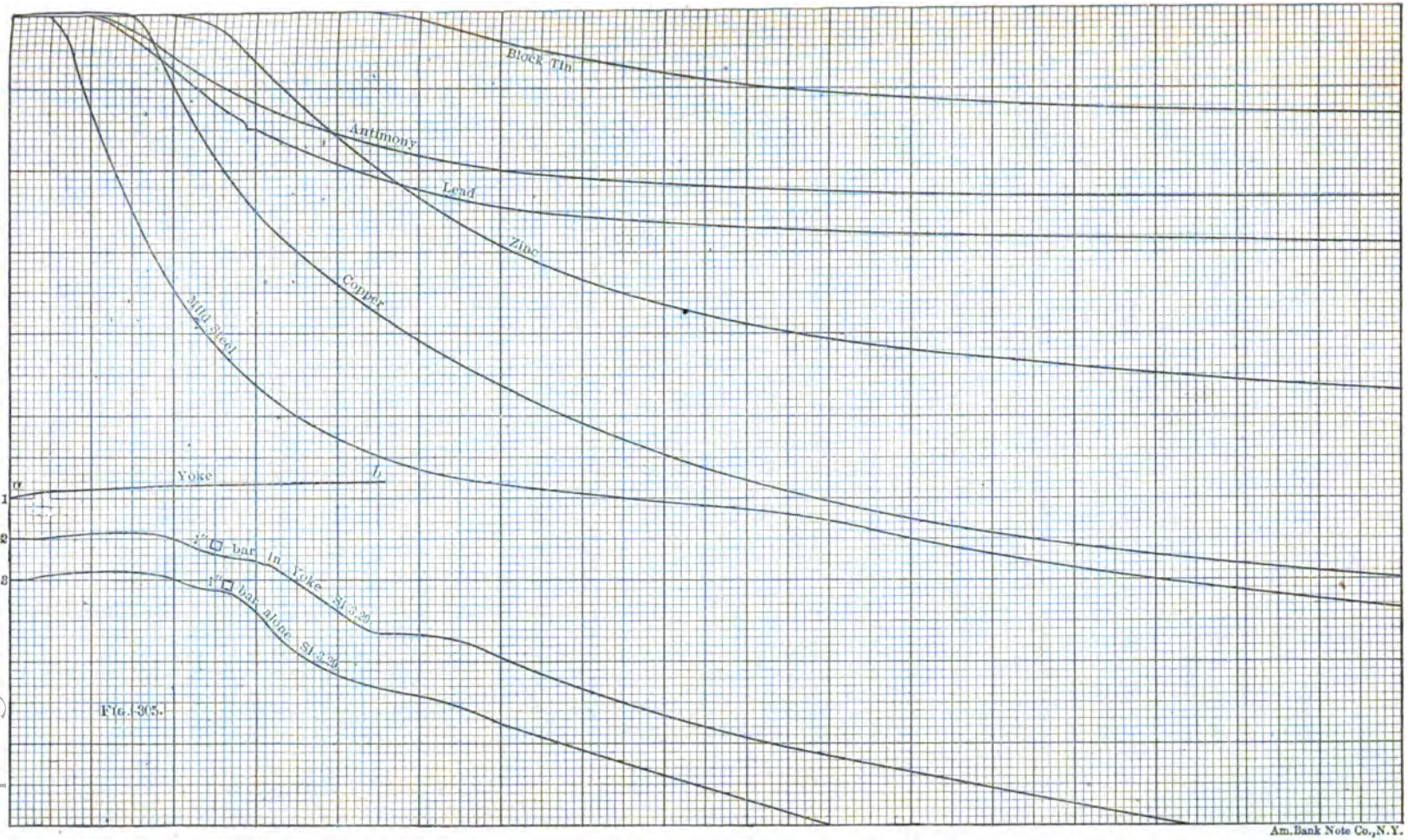

FIG. 305.

Digitized by Google

Digitized by Google

between 12½ and 14 minutes, and decreasing until 16 minutes, or a little later. This I call the 3*d Expansion*. When these expansions are completed the regular shrinkage curve from the loss of heat is formed, the same as in the simple metals.

This shrinkage had been acting from the beginning, for the metal had been parting with its heat all the time, but the expansions were great enough to overcome all this shrinkage during the first 16 minutes. Another proof of this is that the shrinkage curve of all 1″ □ cast-iron bars takes substantially the same direction after the 3d Expansion is completed. This is beautifully shown in Curve 35 of Chart IV., where the dotted line shows the location of the shrinkage curve if no expansion had occurred.

Solidifying of Cast Iron.—To get an explanation of Curve No. 11, 18 test bars 1″ □ and 1 foot long were poured at the same time as the 2-foot test bar from which the diagram was taken. As the bars were made in a snap flask there was nothing around the bar but sand. The first bar was numbered 19. At the end of 1 minute the iron in the gate was still fluid. At 1½ minutes the sand was cut away and the bar taken out, but it broke by its own weight, though it *was not fluid*. One half of this bar was dropped into a barrel of ice water and the other half was allowed to cool in the air. At the end of each minute thereafter the sand was cut away from a bar, which was broken, and half of it dropped into the ice water. From the fact that the cooling of a 1″ □ bar in water cannot be instantaneous, and that anything short of that would allow a change in crystallization, the quenched bars give only a faint idea of the condition of the iron at the time it was taken from the mould.

Each bar was a little stronger than the preceding one, and as soon as it could not be broken with a pair of pincers alone, one-half of the bar was placed in a hole in a heavy block of iron, when a wrench of the pincers would break it. Then a light blow of a hammer, and toward the end quite a sharp blow from a five-pound hammer was needed.

Curve No. 11, Fig. 306, was then divided according to the times of breaking the 18 bars, to see which belonged to the different parts of the curve. Previous to making the bars described, and while Curve No. 13, Chart II. (Fig. 307), was being made, a similar number of bars numbered from 1 to 18 had been broken.

Hard or Soft Cast Iron.—An examination of the fracture of these two series of quenched bars shows a great change in the crystal-

Digitized by Google

line structure before and after the 3d Expansion, but these fractures do not at all show what the iron really was, because quenching cannot entirely prevent the crystals assuming their natural form. The whole change from melted iron to a soft gray crystalline casting, shown by Curve No. 11, can take place in a thin casting in less than a minute (see Curve 17, Chart II.). If a non-chilling iron, like that from which the Curve No. 11 is made, is poured against a chill, only a very thin portion will be chilled, and behind this, toward the molten mass, will be formed a dense black soft grain, probably at the same instant with the chilled portion. This instantaneous passage of cast iron through all of the stages of crystallization, from fluidity through the 3d Expansion, makes it impossible to fix the iron at any instant. To get an approximate idea of the state of the iron, the bars numbered 19, 25, and 30 were selected for analysis; No. 19 before the iron was solid, No. 25 during the 2d Expansion, and No. 30 just as the 3d Expansion had reached its maximum. The combined carbon in bar No. 19 was 0.60, in bar No. 25, 0.45, and in bar No. 30 it was 0.06. From the location of the curves, bars 26, 27, and 28 were probably as hard and contained as much combined carbon as No. 25. As bar No. 28 probably contained 0.40 combined carbon, and as bar No. 30 contained only 0.06 combined carbon, which is the same percentage as was contained by the portion of the bars which were allowed to cool in the air, it appears that the change of combined carbon into graphite takes place in less than one minute in a casting 1″ □ cooled in its own mould, and that this is the time when hard iron changes to soft iron. After the 3d Expansion no further change in the crystalline structure took place, and the shrinkage curve was that ordinarily made by the loss of heat. The bars Nos. 19 and 25 were so hard that they could not be touched with a drill, and it was very difficult to break off enough for analysis. It would seem that the bars were much harder than could be accounted for by the 0.60 per cent. of combined carbon, while bar No. 30 was very soft. The final arrangement of crystals took place during the 3d Expansion, and at that time the iron became soft. Calling an iron by the number of its curve, No. 11 was intensely hard for the first 10 minutes and became soft during the 3d Expansion. In Nos. 12 and 13 the 3d Expansion was almost lacking and the iron was left in its hard state. The facts were that the castings made from the mixture of No. 11 were all soft, while those made from Nos. 12 and 13 were difficult to drill.

Digitized by Google

CHART II.

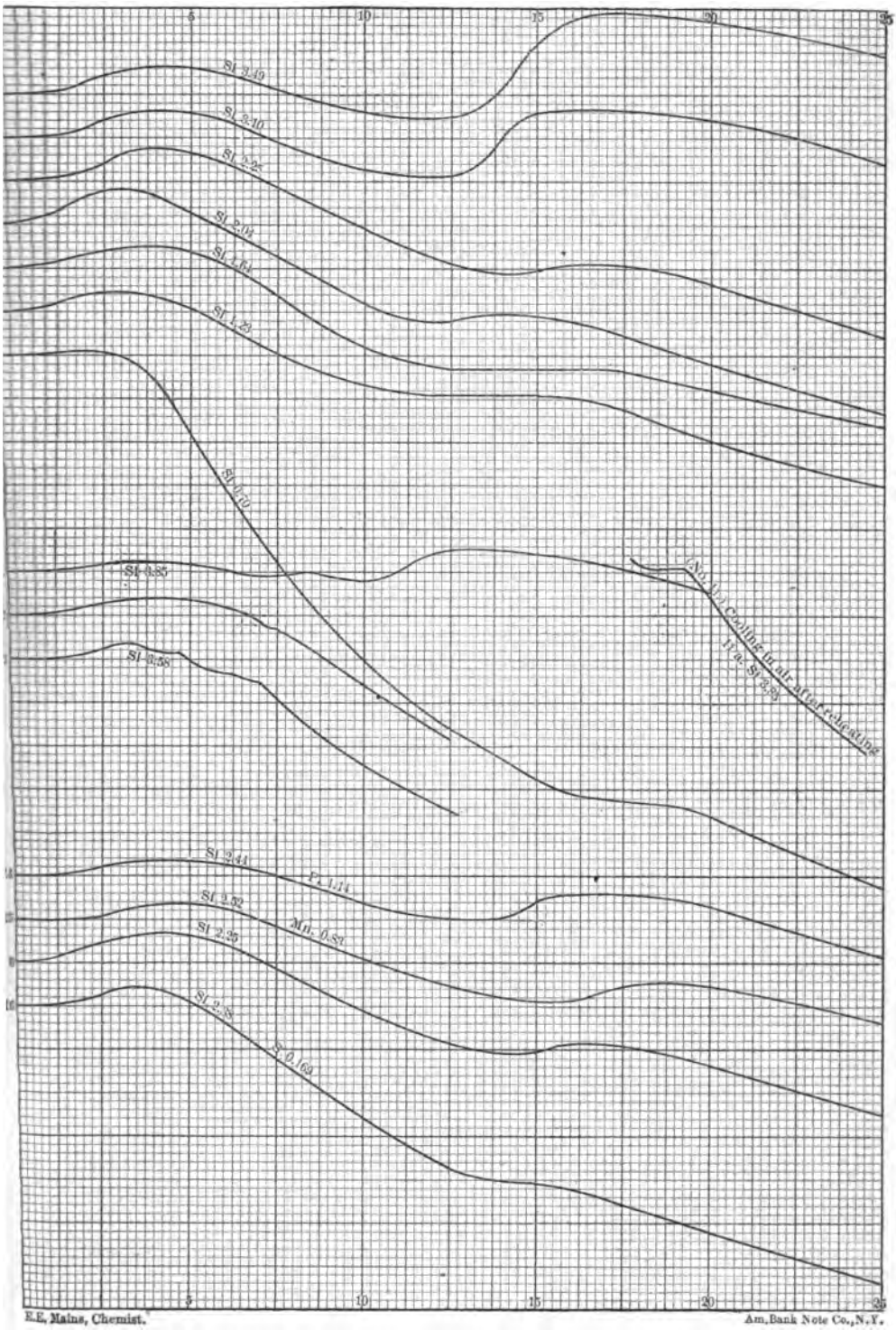

FIG. 307.

CURVES OF 1" □ BARS. FULL SIZE.

Digitized by Google

Digitized by Google

Much depends upon the character of the original irons. No. 10 would almost scratch glass, but Nos. 6, 7, 8, and 9, made from pig iron only, and melted in a crucible, though the 3d Expansion is not great, were soft. An investigation may show that the 1st Expansion, being so large, had a softening influence, or that the entire absence of the 2d Expansion may account for it.

Silicon is a Softener and a Lessener of Shrinkage.—Curve No. 4, Chart II., shows an immense 3d Expansion, and the iron is so soft and open as to be very weak, and the silicon is 3.49 per cent. Curve No. 5 is one of iron containing 3.10 per cent. of silicon. The 3d Expansion is not so great, and the iron is not quite as soft as in No. 4. Each lessening of silicon lessens the 3d Expansion, and the iron is harder each time. The silicon of No. 11 is higher than that of No. 4, being 3.85 per cent., but No. 11 is from a regular cupola mixture of close-grained low carbon irons, and 40 per cent. of the mixture is the sprues made the previous day, and the latter have been melted over each day. In irons producing curves Nos. 4 to 9, and 14, 15, and 16, the total carbon was nearly 4.00, and all are open-grain pig iron, and melted without scrap in a crucible. In Nos. 11, 12, and 13 the carbon was about 3.10 per cent., phosphorus was 1.00, and sulphur 0.10, per cent., while in the crucible irons Nos. 4 to 9 P was only 0.20, and S 0.04.

In the practical application of cooling curves to foundry work, the mould can be made in 20 minutes, and as soon as the iron is running the bar can be poured. It takes 15 minutes to find the 3d Expansion. It is at once apparent whether the mixture needs more or less silicon, and the charges of iron can be changed at once, if necessary.

Phosphorus, Sulphur, and Manganese in Cast Iron.—In Curve No. 14 phosphorus is 1.14 per cent., and the silicon is 2.44 per cent. The 1st Expansion continued longer than in Curve No. 6, the 3d Expansion was greater, and the casting, therefore, is softer. The final shrinkage begins higher up or from a greater initial expansion, and the total shrinkage is therefore less than in No. 6. In Curve No. 15 manganese was increased to 0.83 per cent., while the silicon is substantially the same as in No. 6, which was about 0.50. The iron was hotter, and for this reason it remained fluid for two minutes. The 1st Expansion was of shorter duration. A 2d Expansion is almost apparent, and the 3d Expansion occurred later, and was greater than in No. 6, therefore the iron was no harder. In Curve No. 16 the sulphur was 0.169 per cent. This

Digitized by Google

has greatly lessened the duration of the 1st Expansion, and has both shortened and reduced the 3d Expansion, and has therefore caused the iron to be harder than that of No. 6.

Size of Casting, and Expansion.—Charts III. (Fig. 308) and V. (Fig. 309) show Curves Nos. 17, 18, 11, 19, 20, 21, and 22, from test bars ½″ x 1″, ½″ □, 1″ □, 1″ x 2″, 2″ □, 3″ □, and 4″ □, which are the sizes that were made for the committee's strength tests. In No. 17 the casting became solid in 20 seconds, with a very slight 1st Expansion, and the 3d Expansion probably occurred in 1¼ minutes. In No. 18 the 1st Expansion began as soon as the bar was poured, and the curve shows the 2d and 3d Expansions. In No. 19 the thickness of the bar was the same as in No. 11, but the width was twice as great, and the ratio of cooling was slower, and therefore all three expansions are retarded. In Nos. 20 and 21 the size of the bar was so great that it was not congealed in the centre for some time after pouring, and the early beginning of the 1st Expansion must have been on account of the pins of the test bar being located on the edge of the mould. As soon as the shell became rigid enough it expanded, the same as any solid casting, and the slowness of cooling prolonged the period of each expansion. The rate of cooling causes the location of the expansion curves to be formed either earlier or later.

Effect of Hot or Dull Iron on Shrinkage.—Much of the discussion on my paper on shrinkage at the December meeting was regarding this question. Chart IV. (Fig. 310) gives four examples of hot and cold poured test bars. The apparatus was arranged to make two curves at one time, and the test bars were half as long as those already examined. The lateral enlargement of the diagrams in this chart is therefore only ten times, but the horizontal time measure is the same as before.

In each of the four examples presented, iron was caught in a ladle and emptied out several times in succession so as to heat it very hot, and then 35 pounds of iron was caught and a bar 1 foot long and 1″ □ was poured immediately. The ladle was then allowed to stand until a shell had formed on the top of the remaining iron. A hole was broken through this shell, and the iron under it poured into another test bar of the same size. This iron was as dull as would fill the mould, and to insure a full test bar the gates had been cut nearly as large as the mould for the bar. The iron put into the first mould was white hot, and flowed like water. The last was red and sluggish. The hot bar, No. 26, became solid in a little

Digitized by Google

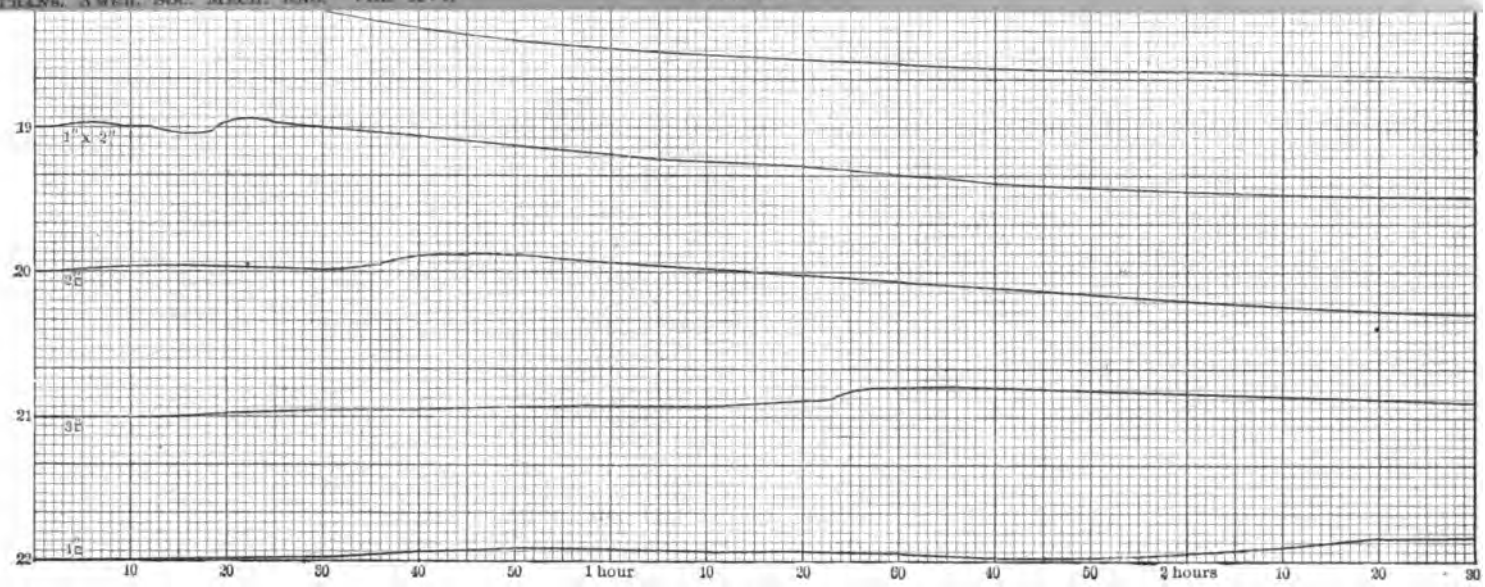

Digitized by Google

1:

h
b
c

(I
b
t
N
E
I
a
t
t
f
s
f
E
b
b
a
T
b

o
t
c
c
a
c
i

l
v
l
t
A
i
w
b
i
w

Digitized by Google

more than a minute, when the expansions began. The 2d Expansion had begun when the dull bar was poured, yet the dull bar went through the expansions so much more rapidly that the temperature that produced the 3d Expansion was reached in both the hot and dull poured bars at nearly the same time. The final shrinkage of the two did not vary much, though the hot bars shrank a little the most. The dull poured bar went through the changes more rapidly, because it entered a cold mould, and was nearer the temperature at which the 3d Expansion would occur, to begin with. The location of the hot and dull bar in the flask was changed each time, because the improvised recording pencil

CHART IV.

FIG. 310.

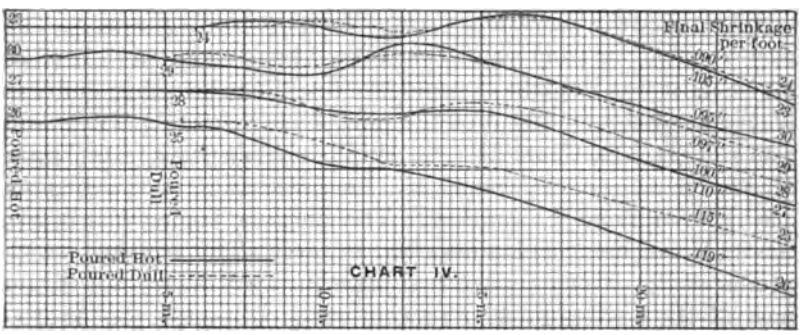

at the left hand did not make as true a curve as the right-hand pencil.

Temperatures at Which the Three Expansions Take Place.—Mr. Henning has arranged to determine these temperatures with a La Chatelier pyrometer, but the diagrams themselves show that each expansion occurs at a definite temperature. In Chart IV., the hot-poured bars had a greater amount of heat to impart to the mould than the cold-poured bars, and the temperatures necessary for the formation of the curves were reached after a longer interval of time. The No. 10 bar in Chart II. was poured very hot, and the 3d Expansion occurs after a greater interval of time. Nos. 7 and 9 were dull, and the 3d Expansion occurs earlier than in the others.

If the rate of cooling is slower it will take a longer time to reach the temperature at which each expansion takes place. For example, in No. 11, Chart V., the 3d Expansion took place in 12

Digitized by Google

minutes; in No. 19 it was 20 minutes; in No. 20 it was 40 minutes; in No. 21 it was 85 minutes; and in No. 22 it was 140 minutes, which corresponds with the rates of cooling. It is important to prove that each expansion occurs at a definite temperature, and it would be a great satisfaction to know the exact degree of heat. The cast-iron test bar, as shown by the 18 bars that were broken, was at quite a red heat at the 3d Expansion. It may be found that a change in chemical composition may hasten or retard the formation of the curves, irrespective of temperature. For example, in the curves of iron and steel, Chart IV., the bars had just a reddish tinge in the sunlight, while the expansion was taking place, and were a dull red, if shaded; and this curve must correspond with the 3d Expansion in cast iron, which takes place at a bright red heat.

When does Carbon Combine when Heated towards Fusion?—The cast-iron test bar from which Curve No. 11 was taken was heated as much as it was thought it would stand without breaking, and was placed at a bright red heat on the pins of the machine. The result was a curve, 11a, Chart II. As this bar was cooled in the open air the change was very rapid, and the proportions of the diagram are different from the original. The diagram begins just before the 3d Expansion. This shows that the crystalline structure which produced the 3d Expansion had been changed during the latter part of the heating to the structure which preceded the 3d Expansion. At that time most of the carbon was combined, and the iron was extremely hard. This experiment shows that in melting graphitic cast iron the graphite changes to combined carbon when the temperature of the 3d Expansion is reached, instead of at the temperature of fusion. Unlike white cast iron, the iron is in an expanded state from the 3d Expansion to the point of fusion; *i.e.*, the atoms are not as close together. In white iron, with the carbon combined in the cold casting, there is no change in the crystalline structure during the heating, and the iron does not reach the expansion which causes it to fuse until just before fusion. Gray cast iron reaches its greatest expansion much sooner than white iron, with the result that it melts from the outside of the casting, and does not become plastic to the extent that white cast iron does.

The bar which produced Curve No. 11 was again heated, to determine if a lower point on the curve could be reached, but it fell apart in handling. Practically, the 3d Expansion is all that can

Digitized by Google

be reached by reheating. It was found that the bar was too long to go in the machine after the second reheating, showing that two heatings above the 3d Expansion had increased the size of the crystals the same as ordinary annealing. The temperature for annealing should, therefore, be that of the 3d Expansion.

To illustrate the expanded condition of cast iron of the quality of No. 11, two of the gates from the 18 bars that were broken were cleaned, and one of them was polished. Two ladles of melted iron from the same heat were placed on the floor, one of the 14-ounce gates was placed in each. They were plunged into the fluid metal at first to cause the melted iron to come in contact with the surface. Both gates (about 1″ round x 4″ long) lay on top of the melted metal until they were melted, about one-fourth being above the surface. This took two minutes.

Curves from Heated Rolled Steel.—Chart VI. (Fig. 311). The first bar treated was a bar of merchant iron 1″ □ by 26″ long, with the holes for the pins 23¾″ apart. The expansion was so great that when white hot it was 24¼″ long. As these bars were cooled in the open air the shrinkage was very rapid. The curve of No. 31 changed slightly after one minute, but it would need other tests to show whether the metal became at all crystalline. The next tested was a bar 1″ □ of Jessops tool steel, Curve No. 32. This was then heated again, to see if it would become more coarsely crystalline, Curve No. 33. The expansion (which is the 3d) at the first heating was blended into the curve of shrinkage, and was of shorter duration than that of the second heating, showing that it became more coarsely crystalline by reheating past the 3d Expansion. This was on account of its high carbon. (The pins of the machine, which were of Stubbs steel, became enlarged by repeated heatings.) The next tested was a bar of 1¼″ ○ mild steel, with carbon 0.45 per cent., which was expected to behave more like No. 31. The expansion curve, 34, was so great, however, that while the 2-foot bar was shrinking at the rate of $\frac{185}{1000}$ inches in 4 minutes, the 3d Expansion overcame this shrinkage and carried the pencil backwards $\frac{10}{1000}$ of an inch. The second heating gave Curve 35. These curves show that the shrinkage is going on at the same time with the expansion, for the direction of the shrinkage curve after the expansion is the same as it would have been if no expansion had taken place, as shown in each case by the dotted line. The total shrinkage of any iron or steel is therefore decreased by the amount of the expansion.

Digitized by Google

At the second heating of the 0.45 C steel, when the expansion began, the color in sunlight was dark, with a faint red tinge; by shading it from the light the side of the bar away from the light was red. When the expansion was over, the bar on the side away from the light was a dull red. The foreman said that if the steel was red short it would break if forged at such a color as existed during the expansion. This remark, and the difference between the expansions of Jessops high carbon steel, and the 0.45 per cent. carbon mild steel, suggest the possibility of determining this property in such metal by the use of these expansion curves.

In the practical application of these cooling curves, any bar of iron can have two $\frac{1}{4}''$ holes drilled, $23\frac{1}{4}''$ apart, in ten minutes; it can be heated in ten minutes, and the record is made in five minutes.

Relation of these Expansions to the Critical Points of Iron and Steel.—This cannot be ascertained until the temperature at which each expansion takes place is determined. If these expansions should occur at the temperatures 850°, 750°, and 650° C., which correspond to the critical points Ar 3, Ar 2, and Ar 1, these expansions are caused by a change in the length of the test bar; in other words, it is purely a physical change, and not at all *caused* by any increase in temperature. If the expansion was caused by a rise in temperature, then, in diagram No. 11, during the 3d Expansion the temperature must have been higher than when the iron was melted, which idea is absurd.

The expansion curves are caused by a rearrangement of crystals, and is purely a physical process.

RECORD OF $\frac{1}{2}''$ □ TEST BARS, CRUCIBLE MELTING.

No. Curve.	Percentages Silicon.	Total Strength.	Total Deflection.	Deflection at 300 lbs.	Set at 300 lbs.	Shrinkage ◇	Shrinkage ▭
9	Si 1.23	354	.23	.18	.03	.156	.167
8	" 1.64	383	.26	.18	.03	.159	.161
7	" 2.04	389	.28	.19	.03	.157	.....
6	" 2.25	390	.30	.20	.04	.157	.161
5	" 3.10	371	.35	.25	.05	.150	.165
4	" 3.49	320	.32	.29	.07	.140	.158
14	Si 2.44, P 1.14	397	.28	.17	.02	.148	.156
15	Si 2.52, Mn 0.85	427	.35	.21	.03	.154	.164
16	Si 2.38, S 0.169	367	.31	.23	.04	.176	.167
11	Si 3.85	447	.25	.15	.01¼	.130	.135

Digitized by Google

CHART VI.

FIG. 311.

TRANS. AMER. SOC. MECH. ENG. VOL. XVI. KEEP.

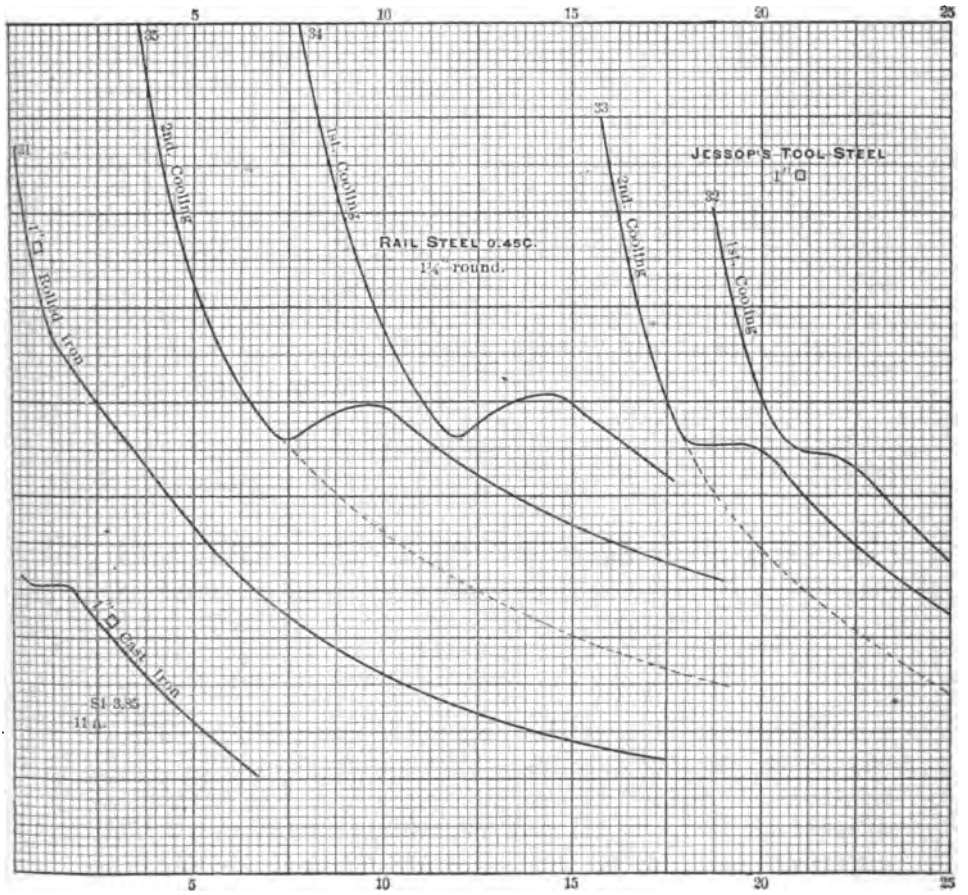

Digitized by Google

Digitized by Google

The test bars made for the committee from these mixtures of iron were melted with coke in a cupola and absorbed sulphur. In iron melted in a cupola, silicon generally increases strength until it reaches 3 or 3½ per cent., according as the carbon is high or low. With high carbon, and melted in a crucible, in this case strength decreases after 2.25 per cent. silicon is reached.

Strong and Weak Cast Iron.—Strength is entirely dependent upon the character of the crystallization. The following case proves the truth of this statement. One flask contained, besides the yokes for measuring shrinkage, one test bar ½″ □, and one $\frac{1}{16}$″ x 1″, both run from one gate; another flask contained nothing but two ½″ □ bars, both on one gate, and all were 12″ long. Forty pounds of molten iron was caught from the cupola, and ordinary small work poured from it. The two moulds were poured with the last iron in the ladle, one immediately after the other, and the bars were removed from the mould in about five minutes. The ½″ □ bars were numbered 1, 1-1, 1-2, and the record of strength and analysis is as follows:

No. Bar.	Transverse Strength.	Silicon.	T. Carbon.	Cd. Carbon.	Graphite.	Phosphorus.	Sulphur.	Manganese.
1	550 lbs.	3.840	3.120	0.100	3.020	1.130	0.075	0.360
1-1	412 lbs.	3.790	3.085	0.095	2.990	1.170	0.074	0.361
1-2	440 lbs.	.....	.....	.....	.....	.....	.....	.....

E. E. KLOOZ, *Chemist.*

The crystallization of No. 1-1 was much coarser than that of No. 1. I have found that forcing the iron into the mould and making the bars larger than half an inch square, or pouring so light as to make the bars smaller than the standard, the strength is hardly ever in proportion to the size, and the yokes never seem to influence the strength. The character of the crystalline structure exerts a much greater influence upon strength than any chance variation in size. These results show that strength may vary in spite of identical chemical composition. The amounts of silicon and graphite are as nearly identical as chemists can work, and another determination from the same lot of drillings would be as likely to reverse the results; in other words, the chemical composition of the strong and weak bar is identical. This is not an

Digitized by Google

exceptional case. With the same mixture of iron the record of ½" □ test bars for three days was as follows:

	Bar 1.	Bar 1-1.	Bar 1-2.
May 15	375	390	365
" 16	443	360	450
" 17	520	455	480

The final adjustment of crystals and formation of graphite in half-inch bars occurs within three minutes after the mould is filled. It is a question whether a jar or vibration would hasten or would influence the formation of crystals, and in that way affect the strength of a casting, or whether the manner in which the iron enters the mould exerts any influence.

Perhaps this question can be answered by obtaining autographic records from a number of bars, all poured from one ladle, and consecutively, without loss of time.

It appears that the discovery of these cooling curves may lead to a perfect understanding of these intricate molecular changes.

DISCUSSION.

Prof. J. B. Johnson.—I would like to ask the author if he has any explanation for the remarkable difference in strength between half-inch bars, poured from the same ladle in close succession, given on page 1131, one having 550 pounds, and the other 412 pounds. He states there was a remarkable difference in the two breaks in the matter of the size of the crystals, but they had the same chemical composition, and were poured at the same time, from the same ladle; and he explains the difference wholly by the difference in the size of the crystals. Can he explain why those crystals were of different size? Were they cooled at a different rate or moulded in a different manner?

Mr. Keep.—This example on page 1131 is one of the ordinary daily tests in our foundry. Our test consists of making two flasks of test bars, one of them with a test bar one inch square in it, and the other having two half-inch square bars in it. I say in this paper that the ladle contained about 40 pounds of iron. One of the flasks was poured from this iron, and then the other immediately afterward. So far as we know no change took place. We do not know that anything was done to either of the boxes.

Digitized by Google

The moulder shook them out in the ordinary way, but there was this wonderful difference in strength. It is a curiosity. Everybody who tests cast iron finds the same differences. In this one case I sent the two bars to have an analysis made, and the chemical composition of the two bars is identical. The grain of the weak bar appears to be coarser than that of the strong bar. I think there is no question about it.

Professor Johnson.—And there is no difference in the moulding or cooling?

Mr. Keep.—Not the slightest difference that I know of.

Professor Johnson.—Both poured from the same ladle?

Mr. Keep.—Both poured from the same ladle, and poured at the same time.

Professor Johnson.—And you have no explanation?

Mr. Keep.—No, sir. But it is suggested here that an explanation will be sought. One experiment I should try at once would be to make two flasks, and have a little apparatus which would continually tap one, and make the other remain still, to find out what caused the difference in those bars. Or, perhaps, as I indicate here, it may have been the way the iron entered the mould.

Professor Johnson.—Might it not be a defect in one of the bars?

Mr. Keep.—There was no defect whatever. Both bars are absolutely perfect. A microscope does not show the slightest cold shut nor the slightest flaw. More than that, I picked out other bars of the same kind and examined them. It is not an isolated case; it is a case which occurs in every man's experience. It is the most provoking thing which can happen, because a casting which you think is strong is weak. That is the reason you give such a wide margin to cast iron, when it is used.

Professor Johnson.—Then why do you come to the very positive conclusion that the difference is wholly due to the difference in the size of the crystals?

Mr. Keep.—In the first place, the size of the crystals is apparent to the eye, and in the next place, the chemical analysis does not show any difference. There is no doubt about its being due to the size of the crystals; but I do not presume to say what made the crystals larger in the weak bar.

Mr. Joseph C. Platt.—I have had that same experience, and attributed it sometimes to carelessness in testing the bars the wrong side up, or that the sand in one flask was more damp than in another. Of course, that is a thing you cannot measure. You

Digitized by Google

may have uniform sand, but the moulder may sponge one flask more than another. It depends on the moulder; and although he may be perfectly sure that the sands are just alike, yet we are very frequently sure, or think we are, about things concerning which we afterwards find we were mistaken.

Mr. Keep.—The remark that has just been made leads me to say that these small differences are imaginary. We imagine that because the sand is a little different in one case from what it is in another it makes a great difference in the casting. If tests are made, it will be found that these variations are so great that they cannot be accounted for in that way. On the other hand, our sand is uniform. It is a large heap, shovelled over and over the night before it is used, until it is uniform. This question was raised in a discussion about a year ago, and a great deal of stress was laid upon it, and I published a large number of experiments, showing test-bars made in sand so wet that the water ran out of it. I made others in kiln-dried sand, and others in ordinary sand, and there was not enough difference in the test-records to lay any stress upon. Of course, there was a little difference, but not enough so that you would have to look for the slight difference in the mixing of one sand pile.

Mr. D. L. Barnes.—I would like to ask Mr. Keep if we are to understand from these tests that the ordinary transverse tests in a foundry are unreliable? As I understand what he says, these wide variations are likely to occur, and we do not know why. Further, I would like to ask him if it is not a fact that he does not know how the moulds for the test pieces were put up? The moulder may, as he often does, wet down the mould before pulling out the pattern, so as to keep the edges square; and that, as I understand it, from Mr. Keep's explanation, would make the test bar a little stronger in one case than another. You will notice that the two bars in the same flask have very nearly the same strength.

Mr. Keep.—The facts are these: I never know what test bars I shall want to use for some scientific purpose. Therefore everything is done uniformly, in the tests I make. None of the moulds are tampered with. There is no sponging of the edges. The bars are drawn out without rapping, and everything is uniform. The same moulder has made me these bars since 1885. There never has been any change in the man or in the method. We use the sand as dry as we can. These questions, in regard to the lack of

Digitized by Google

uniformity, are the matters which I want to have brought before a body of men like this, for this reason, that foundry business is not accurate, and you cannot make it so. A mechanical engineer insists upon accuracy. They say that we must make our test bars show uniform results or else our methods must be wrong. I tried in December, and I try every time that I have a chance to speak, to show that foundry conditions will vary; and I brought this illustration here just to show this thing—that here are test bars made identically the same, so far as we know, and yet there is a wide variation in strength, and the tests of the committee will show much of the same thing. All our bars have been tested either by Professor Carpenter or by Professor Benjamin. The reports come back that the fractures were perfect, without flaws. I know that they were moulded in similar moulds; they were all tested exactly as they lay in the mould, and, so far as we know, we have avoided every error that we could, and yet these variations come in; and that is the very thing I want to impress on the minds of all these men who work so accurately. A man said to me this morning, "Won't your coke vary?" Of course, it varies every day; the atmosphere varies every day; our pig iron never comes alike, and so all the way through. But we get our results very nearly alike; we get them so nearly alike that a mixture will run regular for sometimes two months; and yet these variations may occur any day.

Mr. W. S. Rogers.—I think, if Mr. Barnes had spent a few months in a foundry he would have discovered pretty closely the error of the statement just made. I do not think the sand or the moulder has anything to do with casting these test bars. I think that change came in the metal before it went into the mould—it was in the ladle. I have cast similar test bars, and cast them on end. The moulder was very careful, very accurate, as much so as it was possible to be in foundry work, and I found that same difference; and I have found it not only in the test bars, but in the castings—castings exactly alike, poured at the same time out of the same ladle. Cast iron is a good deal like what one of our old members said once in regard to steel: "There is a great deal about it we have not discovered yet."

Mr. William Kent.—I have not noticed in any of Mr. Keep's papers any discussion of the question that was raised about eighteen years ago, about the third form of carbon in cast iron. About that time some chemists, Mr. S. A. Ford of the Edgar

Digitized by Google

Thomson Steel Company and Mr. De Brunner of Park Brothers & Co., and, I think, some others, discovered, or thought they had discovered, a third form of carbon in certain cast irons; that is, when they tested cast irons for combined carbon and graphitic carbon they would get the usual results found by the ordinary chemist; but when they applied these tests to certain forms of charcoal cold-blast iron, these irons gave a different kind of precipitate, containing carbon and iron, and the carbon was said to be neither combined nor graphitic, but what they called the third form of carbon. And it was found that all irons that gave this peculiar chemical result had peculiar mechanical properties—that is, they were car-wheel irons. Now, it has been known from time immemorial, almost, that certain irons in the Salisbury district in Connecticut and in the Hanging Rock district in Ohio have remarkable mechanical properties not explained by chemical analysis, and I regret that Mr. Keep has not got into his paper some discussion of this ancient work, showing the remarkable difference, both in chemistry and in physical and mechanical properties, of the charcoal cold-blast irons from these anthracite and coke irons. I also regret that the committee has not taken up the researches made early in cast irons, such as those made by Major Wade in 1856, and those by Fairbairn and Hodgins at an early date, in regard to improvement in cast iron by re-melting. I think that something could be learned by reference to those original researches.

Professor Johnson.—I would like to speak to another part of this paper. First, in regard to these cooling curves, they prove, to my mind, better than anything I have ever seen yet, that all grades of steel are crystalline in structure, and all the talk about the cold crystallization of steel is, in my opinion, a misconception. I have other evidence of it, but this is very good evidence, and if Mr. Keep would take a mild steel as low down as one-tenth of one per cent. of carbon he would find the same characteristic curve.

Mr. Keep.—There is one, marked mild steel, in the first chart, of two-tenths carbon; that is pretty near it.

Professor Johnson.—You still find a sudden increase or retardation in the contraction?

Mr. Keep.—On the last chart, Fig. 311, there is a piece of puddled bar which shows a change. On Chart I. that which is marked mild steel was cast at the steel works in this city; that contained two-tenths carbon. That shows it. That shows a

Digitized by Google

retardation, you see, after about twelve minutes. Then the retardation continues for ten minutes. Each two of those large squares represents five minutes of time.

Mr. Henning.—All of those wrought irons and cast irons show these peculiarities in the crystals?

Professor Johnson.—All steel shows it. Wrought iron does not show it.

Mr. Henning.—You do not see it so well on the wrought-iron curve, because it was cooled in the air; but if you take a foreshortened view of that curve you will see a sudden change in the character of the curve, and that is a plain indication that about that time a slight effect of that kind is made manifest. But these bars, having been cooled in air, cannot be compared with the other bars cooled in sand, because the process is so rapid that no distinct record was obtainable. But there is no question that with this sudden change and great change in the curve the same effect is indicated, only to a much lesser degree.

Professor Johnson.—I would not understand that curve in that way, because, when the curve is due to crystallization, that crystallization begins and ends. When the process of crystallization has been completed there must be a second change, which reduces the curve back to the temperature form. There must be two changes. We have a temperature form which is a smooth curve. Now, if we suddenly introduce into that curve another cause, which begins suddenly and ends suddenly, then after that action has ceased we again return to the temperature curve which obtains in all of the steel curves. But in the case of the wrought-iron curve we have but one change, which is simply a crook in the curve, and, therefore, I should say that might be a change in the rate of cooling, or something of that kind, but could not be due to this process of crystallization.

Mr. Henning.—I will explain. The cooling curve, due to temperature alone, begins after the 3d Expansion, and is then a continued regular curve until the bar is cold.

Professor Johnson.—But we must have a cooling curve from the start also.

Mr. Henning.—If this curve is drawn through the initial point it would represent the true cooling curve, which is almost like the curve shown on Fig. 311, in which case the bar is cooled in air. But the cooling process is incomplete, from two causes; one is the effect of the sand on the bar, and the other is the effects due to

Digitized by Google

the kind of material dealt with, which obliterate this cooling curve due to the temperature alone. Now, the bar produces a crook of its own, due to its composition, due to the effect of the absorption of the heat by the sand, and the resultant effect also. This resultant line is shown by the autographic recorder. Now, what this crook is we cannot say exactly, but we know it is not the cooling curve due to temperature alone, which it would be if a perfectly homogeneous bar were tested and allowed to cool off, giving a true parabola. We do not know what all of these curves indicate, but we do know that this curve at 3d Expansion is produced by the total separation or change of carbon in the iron, because we see that after this point has been reached it has only 0.06 per cent. of carbon; while previously the combined carbon was 0.60. Evidently the combined carbon has been separated out and is in the shape of graphite; while beyond that point the bar undergoes no further change in chemical composition, but always contains 0.06 combined carbon. The rest is graphitic carbon that lies between the crystals. The last part of the curve is the true cooling curve of the bar, regardless of chemical composition, indicating a mechanical change due to radiation of heat; while the other grades of wrought iron here show us almost nothing but the effect of dissipation of heat; the changes take place so rapidly that by the time the bar was put on the machine probably the whole action, due to separation of carbon, occurred within a few seconds, and does not show on the diagram except in the crook, after which it changes into the uniform cooling curve.

Professor Johnson.—The fact that the wrought iron cooled rapidly would not cause it to have a single crook instead of two crooks, would it?

Mr. Henning.—Yes, it might. This entire curve shows only the latter part of the curves obtained from cast bars, because very rapid cooling took place before it was possible to put it on the recorder. The tail end of it alone was caught, because the bar could not be got on the machine quick enough, and the whole effect, which is shown so nicely in the cast-steel bar on another diagram, could not be recorded. Looking at curve 31*a* (Fig. 312) a change will be seen there between 1¼ minutes and 6¼ minutes, marked *h*. That is the same change shown on Fig. 307, near the 12-minute ordinate on the larger curve. While curves 31 and 31*a*, from the initial point down to the 1¼-minute ordinate, and the change

Digitized by Google

beyond this point, show that there would have been a curve corresponding to 3d Expansion if the bar could have been placed in the recorder quickly and cooled slowly. But still a hump, *h*, is clearly shown. If a molecular change had not taken place the dotted curve *c* would have been recorded. As it is, a hump is

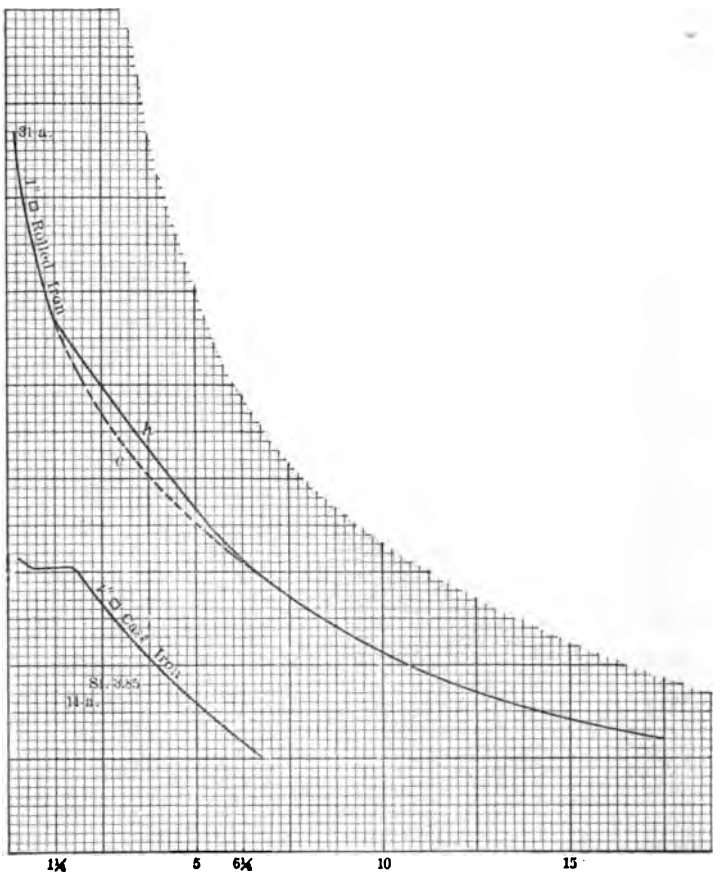

FIG. 312.

clearly shown above that line. The angle with the horizontal of the line tangent to the curve, after 3d Expansion, depends entirely upon the rate of cooling. The quicker a bar cools the more the line will approach the vertical. This bar, 31, cooled in air very rapidly; hence the angle gives us the rate of cooling. This angle indicates the rate of cooling of the wrought-iron bar, and is much greater than in the curve of cast iron cooled in air. Therefore I say that

Digitized by Google

the wrought-iron bar shows practically the same thing as the other bars.

Professor Johnson.—It seems to me that the gentleman has proved my proposition; and although it is not so very important, I do not want it to be understood that I admit at all the force of the argument, for the wrought-iron curve shows one crook only. Now, the other curves show the effect of the crystallization, or the change of carbon, or whatever it is, through a double curve. The gentleman claims that the first curve upward they lost, and, therefore, if they got any at all, they should have obtained the curve downwards. The only thing they did get on the wrought iron is the upward curve. There is no crook beyond that point; from there on it is a cooling curve. Beyond this point there is no crook in any of the curves. They are regular cooling curves from that point on. Therefore I claim that the curve upward which they caught can in nowise be confused with the second or downward curve on the steel diagrams. It is of altogether a different character. It may be confused with the first or upward curve of the steel, but if this action is due to size, or to chemical or crystallization change, then it begins and ends, and

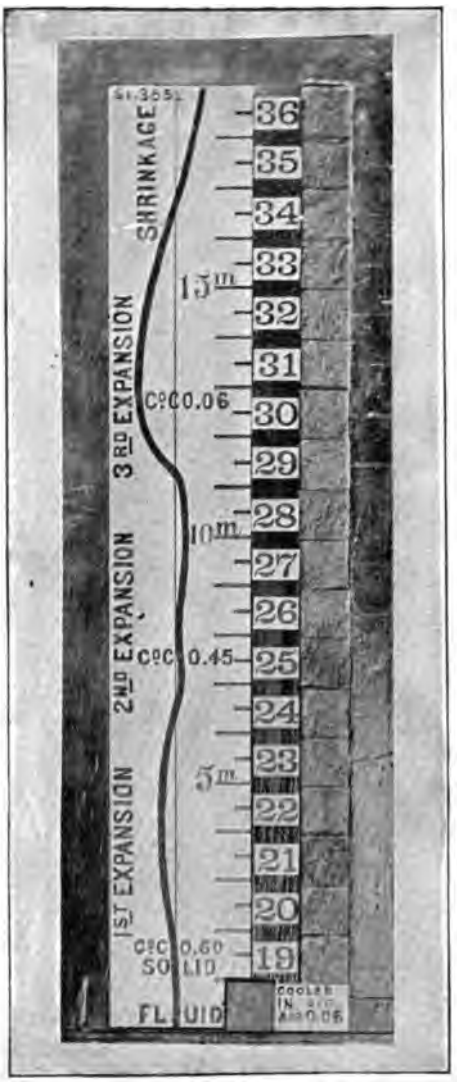

FIG. 313.

Digitized by Google

when it has ended the contraction curve returns to the form due to the change of temperature, and therefore I think this is anomalous with reference to these steel curves, and cannot be explained in the same way.

Mr. Keep.—Fig. 313 is from a photograph of the fractures of the 1″□ bars, numbered 19 to 36, referred to on pages 1123 and 1124. The central part of the fracture of bars 20, 21, and 25 became blue soon after the fresh fracture was made, which accounts for the dark color. As described before, the fractures do not vary as much as the iron must have varied at the instant that each bar was thrown into the ice water.

I regret that I have not been able to duplicate curve 31, on Chart VI., to determine the cause of the change in the direction of the curve, and whether this puddled iron was at all crystalline.

I do not think that we should draw any conclusions from this isolated case. I introduced it to bring out strongly the influence of carbon on the crystalline structure of steel.

Digitized by Google

DCLVII.*

TESTS OF A COMBINED ELECTRIC LIGHT AND ELECTRIC RAILWAY CENTRAL STATION.

BY DUGALD C. JACKSON AND ARTHUR W. RICHTER.

THE central station of the Four Lakes Light and Power Company supplies the power for the electric lighting of Madison, Wis., and also supplies power for the Madison City Railway. The station is situated on the bank of Lake Monona, in a fairly central location (Fig. 314).

The boiler-room contains two return tubular boilers, rated at 110 horse-power each, and one Stirling boiler of 200 horse-power capacity. The engine-room is equipped with three Russell compound engines, two Davidson jet condensers, and two Davidson feed-pumps.

Engine No. 1, 380 horse-power capacity, is belted to the main shaft, from which are run four Thomson-Houston arc-light machines, each of which has a capacity of fifty 1,200 candle-power lamps, and one Westinghouse alternator of 750 lights capacity. Two other alternators, a Slattery and a Thomson-Houston, are also installed but are to be removed.

Engine No. 2, 190 horse-power capacity, is used for running the railway generators. These are two 90 K. W. General Electric machines of 500 volts, 180 amperes, speed 650, and are belted tandem fashion from the fly-wheel of the engine. A third tandem belt from the same fly-wheel runs over a clutch pulley on the main shaft, and the shaft can therefore be driven from this engine when desired. The two generators are connected to the same bus-bars, and supply power for the operation of the Madison Street Railway, and for a number of stationary motors which are connected to a special power circuit run out from the bus-bars. Both of the above engines are connected to one of the Davidson condensers.

Engine No. 3, 400 horse-power capacity, is directly connected

* Presented at the Detroit meeting (June, 1895) of the American Society of Mechanical Engineers, and forming part of Volume XVI. of the *Transactions*.

Digitized by Google

to a 300 K. W. "Monocylic" alternator, and condenses into another Davidson condenser and air-pump. The alternating current output of the station is used exclusively for incandescent lighting.

ENGINE DIMENSIONS.

Nos. 1 and 3.
- Stroke, 24 inches.
- Diameter of high-pressure cylinder, 15 inches.
- Diameter of low-pressure cylinder, 24 inches.
- Diameter of high-pressure piston-rod, crank end, 3 inches.
- Diameter of high-pressure piston-rod, head end, 2⅝ inches.
- Speed, engine No. 1, 134 revolutions per minute.
- Speed, engine No. 3, 152 revolutions per minute.

No. 2, railway engine.
- Stroke, 20 inches.
- Diameter of high-pressure cylinder, 13 inches.
- Diameter of low-pressure cylinder, 20 inches.
- Diameter of high-pressure piston-rod, crank end, 2¼ inches.
- Diameter of high-pressure piston-rod, head end, 2¼ inches.
- Speed, 133 revolutions per minute.

The station is operated by one engineer and one fireman from midnight until noon, and by one fireman, one head engineer, and one assistant from noon until midnight, and one oiler from 6 P.M. until 12 P.M., making a total of six station employees for the 24 hours' run. Each 24 hours during the week, current is furnished to the electric railway and power circuits for 17.5 hours, and to the alternating current circuits for 23.5 hours, except on Sunday, when the alternators are shut down for an additional 12 hours. Current for arc lighting is supplied principally between the hours of dusk and midnight, though certain arc-light circuits are operated all night.

This station is one of that type, so well known to electrical engineers, which has grown to considerable proportions from a small and poorly conceived beginning, and which therefore may be said to suffer through its own growth. During the past two or three years it has been quite thoroughly overhauled, and its physical condition has been greatly improved, but only at the expense of a considerable addition to the capital account. The results of the test which are given may be taken to represent results fully equal to those obtained by the average electric station in our cities of the smaller size. (Madison has 15,000 inhabitants.) This statement will doubtless be viewed with surprise by the numerous members of this Society who are experts in

Digitized by Google

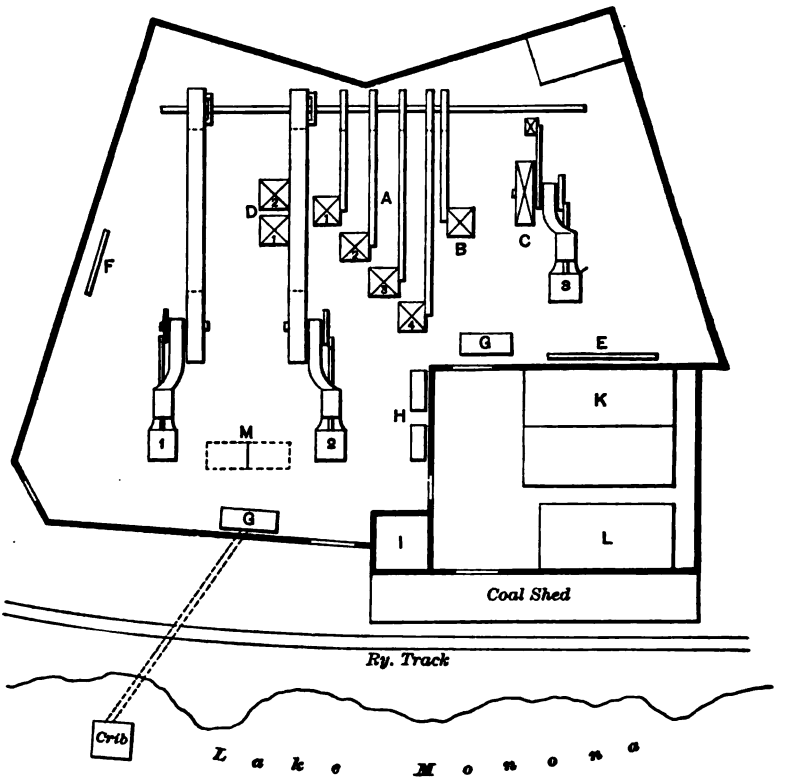

A, arc-light dynamos; *B*, Westinghouse alternator; *C*, Monocyclic alternator; *D*, railway generators; *E*, electric light switch-board; *F*, electric railway switch-board; *GG*, condensers and pumps; *H*, feed pumps; *I*, oil room; *K*, return tubular boilers; *L*, Stirling boiler; *M*, hot wells; 1, 2, 3, Russell engines.

FIG. 314.

steam engineering, and who carry continually before their eyes the remarkable economy obtained in pumping plants; but that the statement is fully borne out by the facts will be affirmed by every electrical engineer of experience.

The object of the test recorded in this paper was to determine the efficiencies of the boilers, engines, and generators under actual operating conditions, nothing having been done either before or during the test to change the conditions from those occurring in the regular daily run. All the data required was obtained and recorded entirely independent of the regular employees, who were required to attend to the operation of the

Digitized by Google

station, exactly as is done day after day and week after week. A trial test of four hours' duration was made beforehand, in order to familiarize the observers with their work and to ascertain whether all the arrangements were well conceived. All reasonable precautions were used to make the data obtained reliable, and all instruments were supplied from the laboratories of the University of Wisconsin, and were compared with the laboratory standards. All electrical instruments used were calibrated by means of a Kelvin standard balance. The steam-pressure gauges and indicator springs were standardized by comparison, while hot, with a mercury column. The scales, thermometers, etc., were tested for accuracy by comparison with proper standards.

The test began at 6 A.M. Monday, when the engines started up for the day, lasting until 5.30 A.M. Tuesday, when the engines stopped for their half-hour breathing spell, and may be considered successful, as nothing more serious than the occasional breaking of an indicator cord occurred to interfere with the results. Four of the observers, one having general supervision of the test, another overseeing the weighing of the coal, another the weighing of the water, and a fourth having charge of the calorimeter tests, were on duty through the entire run. These four men, Messrs. Burgess, Frankenfield, Mead, and Crane, were members of the senior class in electrical engineering in the University of Wisconsin, and handled their work excellently. They were assisted by a certain number of experienced student observers, about twenty in all, who were required to read the various ampere meters and volt meters, take indicator cards, etc. The test was generally supervised by two of the assistant professors of the university. During the whole of the test the station presented no confusion, but was operated with the usual systematic regularity.

TESTS.

The coal was weighed as it was brought into the boiler-room. The water-level and steam gauges were kept as nearly constant as practicable, and at the close of the test the water in the Stirling boiler was at the original level, while in one of the return tubular boilers it was 1.5 inch above the string, and in the other a little over an inch below it, so they were considered as practically at the same level. The Stirling boiler was in use during the entire run, and at 4.45 P.M. and at 5.45 P.M. the two tubular boilers

Digitized by Google

were successively cut in and were shut off again and the fires banked at 12.35 A.M. The coal used in getting these boilers up to pressure (nearly 500 pounds) was not counted as part of the coal consumption in the computed results.

Calorimeter tests of the steam were made every hour at the boilers, and as frequently as possible at the engines, while in service. Throttling calorimeters were used, except at the railway engine, during the day-time, where there was so much water present that the throttling calorimeter could not be used, and a separating calorimeter was resorted to. The poor quality of the steam at the engines was due to the arrangement and condition of the steam mains. Engine No. 2 received the drain of the greater portion of the system. The steam-pipe was connected to the under side of the main and was uncovered at the time of the test. The pipe leading to engine No. 3 was also uncovered, and as the pipe is of considerable length the condensation is considerable, while the valve provided to cut the steam from that pipe during the period when the engine is idle was not made use of. The pipe leading to engine No. 1 was covered, but no provision was made to cut the steam from that pipe when the engine was not running.

The water was measured by means of two tanks placed on scales. Both feed-pumps were put into use, one as an auxiliary, to pump the water from the hot well into the tanks, and the other to feed the boilers. The latter pump communicated with the tanks by two branches of piping connected by a three-way cock, and a hose was attached to the other pump, so that one of the tanks was filled while the other was being emptied. The exhaust pipe of the regular feed-pump was connected to the vacuum of the condenser, and the steam consumption was figured from cards taken at frequent intervals, the number of strokes being recorded on a continuous recorder. The steam consumption of the auxiliary pump was ascertained by running the exhaust into a small surface condenser furnished from the university laboratory, by which means the condensed water was collected and allowance made therefor.

The railway engine, No. 2, was started at 6 A.M. and continued running until 11.10 P.M. During the day, from 6 A.M. until 6.30 P.M., this engine, besides driving the two railway generators, drove the main shaft, to which a Westinghouse alternator was belted, supplying the day demand on the incandescent circuit.

Digitized by Google

This engine was indicated every five minutes, indicators made by Dreyer, Rosenkranz, and Droop, of Hanover, Germany, being used on the low-pressure cylinder, and Tabor indicators on the high-pressure cylinder. These indicators were supplied with electro-magnetic devices for taking the four cards simultaneously on closing a switch, the current being supplied from storage cells. Friction cards were taken upon starting up with the generator fields excited and again with the field circuit broken. The speed was obtained by means of a continuous revolution counter. Two ampere meters through which the current supplying the railway feeders passed, one ampere meter on the power circuit, and a volt meter giving the dynamo pressures, were read every half-minute. The condenser pumps were indicated at half-hour intervals and the speeds were taken.

At 6.10 P.M. the arc-light engine, No. 1, was started and continued running until 5.30 A.M. At the same time the direct connected engine, No. 3, was set running, and the supply for the incandescent circuit was changed from the Westinghouse machine to the "Monocylic" alternator. The railway engine, No. 2, now no longer drove the main shaft, but the belt ran over a loose pulley on the shaft. The arc-light engine, No. 1, was indicated every fifteen minutes, and the direct-connected, No. 3, every ten minutes, and the speed obtained from continuous revolution counters. Friction cards were taken both before and after the run. The current of the arc machines was measured by a Weston ampere meter, and the voltage was obtained by a Weston volt meter in series with a high resistance, the apparatus being placed as far from the machines as possible to avoid any disturbance which might be caused by stray magnetism. Ampere meter and volt meter readings for the Westinghouse alternator were taken every fifteen minutes, and the "Monocyclic" output was taken by five-minute readings. The power factor of the load on each of the machines was ascertained by means of a station watt meter, loaned by the General Electric Company.

There can be no question in regard to the reliability of the results averaged from readings taken as often as was done in this test, except in the case of the railway machinery. It is still an open question as to the best method of determining the average power developed by an electric railway engine; but the results of considerable experience with electric railways on the part of one of the authors makes us feel certain that results are obtain-

Digitized by Google

able by the arrangements which were used in this test, which are as accurate as those obtainable by any method yet set forth.

RESULTS OF TEST.

Boiler efficiency.

Quality of steam.

Stirling, 6 A.M. to 6 P.M., 99.2 per cent.

6 P.M. to 5.30 A.M., 99.7 per cent.

Return tubular boiler No. 1, 4.45 P.M. to 12.30 A.M., 97.3 per cent.

No. 2, 5.45 P.M. to 12.30 A.M., 96.5 per cent.

Total average, 96.8 per cent.

Average pressures:

Steam, 89.5.

Barometer, 29 inches.

Draught (inches of water), .3.

Average temperatures:

External air, 46.2 degrees Fahr.

Boiler-room, 58.9 degrees Fahr.

Escaping gases, 422 degrees Fahr.

Temperature of hot well, 82.24 degrees Fahr.

Temperature of feed-water, 123.5 degrees Fahr.

Factor of evaporation, 1.119.

Water pumped into boilers, 102,349 pounds.

Equivalent evaporation from and at 212 degrees, 114,508 pounds.

Total amount of coal burned, 17,108 pounds.

Total ash, 1,871 pounds.

Total combustible, 15,232 pounds.

Per cent. ash, 10.9 per cent.

Water evaporated per pound of coal, 5.98 pounds.

Water evaporated per pound of combustible, 6.72 pounds.

Equivalent evaporation from and at 212 degrees, per pound of coal, 6.69 pounds.

Equivalent evaporation from and at 212 degrees, per pound of combustible, 7.52 pounds.

Steam used in throttling calorimeters, 385.7 pounds.

Steam used in separating calorimeter, 35.07 pounds.

Total, 420.8 pounds.

Steam used by feed-pumps, as figured from indicator cards, from 6.00 A.M. to 6.00 P.M., 538.5 pounds. From 6 00 P.M. to 5.30 A.M., 472.3 pounds.

Total, 1,010.8 pounds.

Steam used by auxiliary pump, 449 pounds.

Steam to be charged to engines, 100,469 pounds.

Engine efficiency.—No. 2, railway engine; 6.00 A.M. to 6.00 P.M.:

Average I. H. P., 117.5.

H. P., hours, 1,410.

Average watts output, 69,200, equals 92.8 E. H. P.

Watt hours, 830,387.

Average E. H. P. divided by average I. H. P. equals 78.9 per cent.

Coal consumed in 12 hours, 7,550 pounds.

Per cent. ash, 9.9 per cent., equals 750 pounds.

Digitized by Google

Combustible, 6,800 pounds.
Water pumped into boilers, 43,172 pounds.
Steam consumed by pumps and calorimeters, 891 pounds.
Water charged to engine, 42,281 pounds.
Water per I. H. P. per hour, 30.0 pounds.
Coal per I. H. P. per hour, 5.35 pounds.
Combustible per I. H. P. per hour, 4.82 pounds.
Quality of steam, 95.7 per cent.
Moisture in steam, 4.3 per cent.
Dry steam used by engine, 40,460 pounds.
Dry steam per I. H. P. per hour, 28.7 pounds.
Watt hours, per pound of coal, 109.9.
Watt hours, per pound of combustible, 122.1.

Station efficiency.

6.00 A.M. to 5.30 A.M., 23.5 hours.
Average I. H. P., for 23.5 hours, 160.5.
Maximum E. H. P., 350.4.
Average E. H. P., 117.9.
Average watts for 23.5 hours, 87,946, which is 2,066,729 watt hours.
Average E. H. P. divided by average I. H. P., 73.4 per cent.
Load factor for 24 hours, 32.4 per cent.
Coal consumed, 17,103 pounds.
Combustible, 15,232 pounds.
Water pumped into boilers and charged to plant after subtracting that used by calorimeters and auxiliary pump, 101,479 pounds.
Steam evaporated and charged to engines after subtracting that used by calorimeters and feed-pumps, 100,470 pounds.
Water pumped into boilers per engine I. H. P. hour, 27 pounds.
Coal per engine I. H. P. hour, 4.5 pounds.
Combustible per engine I. H. P. hour, 4.0 pounds.
Watt hours per pound of coal, 121.
Watt hours per pound of water, 20.4.
Average quality of steam, railway engine, 96.2 per cent.
Average quality of steam, arc-light engine, 97.1 per cent.
Average quality of steam, Monocyclic engine, 97.8 per cent.
Average, 96.8 per cent.
Dry steam used by engines, 97,214 pounds.
Dry steam per engine I. H. P. hour, 25.8 pounds.
Average I. H. P. of condenser pump No. 1, 2.62.
Average I. H. P. of condenser pump No. 2, 1.96.
Horse-power hours of condenser pump No. 1, 61.6.
Horse-power hours, pump No. 2, 9.8.
Friction load of engine No. 1, 22.4 with shaft.
Friction load of engine No. 2, 12.2 without shaft.
Friction load of engine No. 3, 22.5.
Total friction load, 57.1 I. H. P. = 11.8 per cent. of maximum I. H. P.

CONCLUSIONS.

The principal results of the tests are shown graphically in the accompanying figures. Fig. 314 shows the general arrangement

Digitized by Google

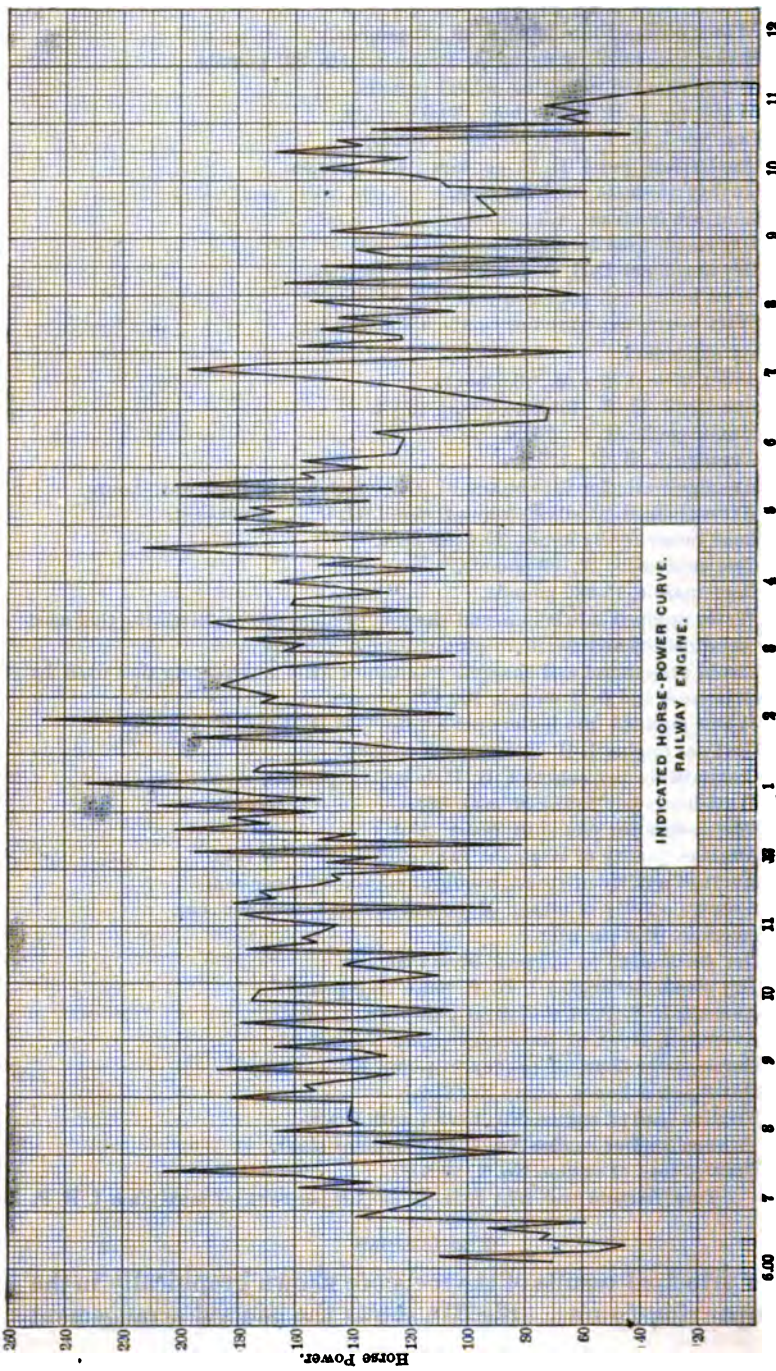

FIG. 315.

Digitized by Google

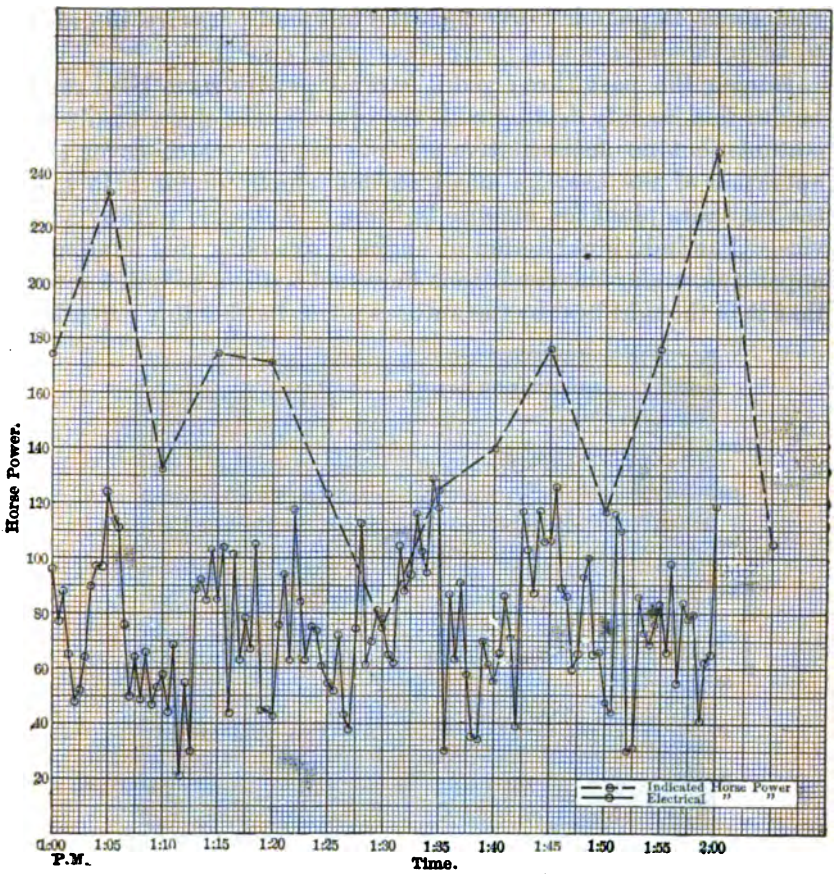

FIG. 316.

of the plant; Fig. 315, the indicated horse-power of the railway engine during the day; Fig. 316, the indicated and electrical horse-powers of the railway plant during one hour; Fig. 317 shows the indicated horse-power of the arc-light engine and the electrical output of the dynamos driven from it; Fig. 318 shows the same thing for the direct-connected engine. In Fig. 319 the full line shows the total indicated horse-power developed in the station during the test, while the differently shaded areas show the part played by each of the three engines. Fig. 320 shows the variation of the steam-gauge reading during the test; the corresponding corrected pressures are seven pounds lower. During the period of lightest load the steam pressure is ordinarily car-

Digitized by Google

ried about 45 pounds lower than the full load pressure, in order to keep the engines at a fairly economical cut-off.

During the past three years several papers have been read before this Society dealing with the operation of electric railway stations, but no authoritative records appear which cover the operation of the average small station which combines in one the requisite plant for electric lighting and electric railway service. The individual action of engines, dynamos, and auxiliary apparatus, under the conditions here met with, is so well known that it is thought best by the authors not to burden this paper by

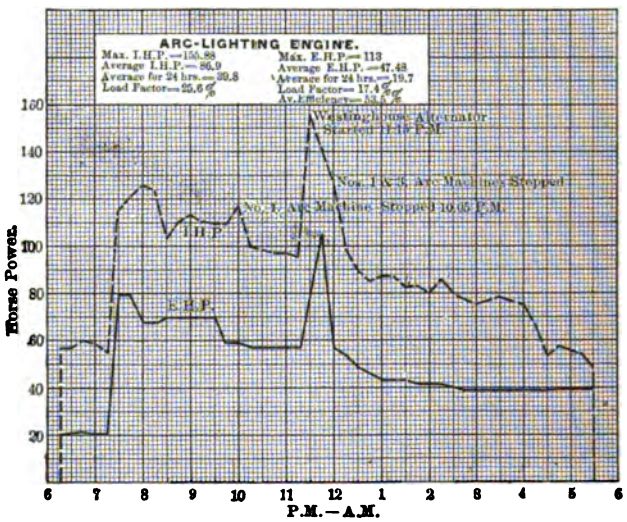

FIG. 317.

indicator cards of well-known forms, or by long tabular records. We wish, rather, to call attention to certain points which bear with somewhat startling force upon the expense of operating these combined stations. It has usually been considered that combination stations may be operated at much less total expense than is required for the operation of two small stations when the lighting and railway plants are separate. This question may be considered under four heads. First, station labor; second, fuel economy; third, superintendence; fourth, fixed charges.

1. In regard to station labor, the plant under consideration (which we will call the Four Lakes Plant) probably could not be improved, and if the lighting and railway divisions were separated, not less than seven men would be required where five men

Digitized by Google

are now employed, and the labor account would be proportionally larger for two stations than for one.

2. The fuel economy of the Four Lakes Plant is fully equal to that of the average medium-sized plant, but it is probably no better than would be given by similar engines and other machinery in separate plants. The coal used during the test was a mixture of Indiana block, costing $3.35 per ton, and Illinois coal, costing $2.72 per ton. The evaporation shown by the boilers was, on the whole, excellent, considering the kind of coal used and the fact that the boilers *were in regular service condition.* The fuel economy of the Four Lakes Plant could be improved by several

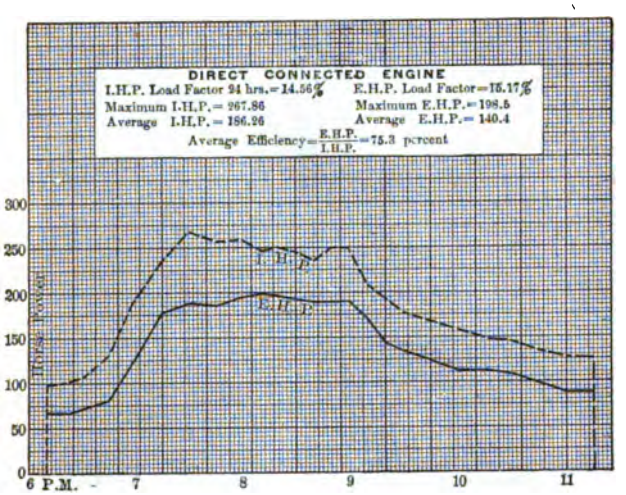

FIG. 318.

minor changes; this is especially true in regard to the arrangement of the dynamos, which now require the countershaft to be unnecessarily run all day, and in regard to the piping, which might be readily changed to deliver better steam. (Some of these changes have already been made since the test.) But these changes would not give the combined plant any advantage over the separate plants. Better fuel economy would also be obtained by closer attention to the details of operation than is given in this plant, but the watt hours developed per pound of coal and per pound of water compare favorably with the reports of the National Electric Light Association for similar stations.

3. The question of superintendence requires consideration

Digitized by Google

from two sides; first, where the railway and light companies are independent, and the latter sells power to the former; and, second, where one company controls both industries. In the first case, no saving is made in office force or superintendence by combining the stations; but, in the second case, a saving is doubtless effected by the combined plant.

4. The preceding divisions give little clew to the best solution for the electric plants of the smaller cities, and we must find the solution in this division. The fixed charges which may be rightfully considered as belonging to the station account depend upon the cost of real estate, buildings, and the machinery in

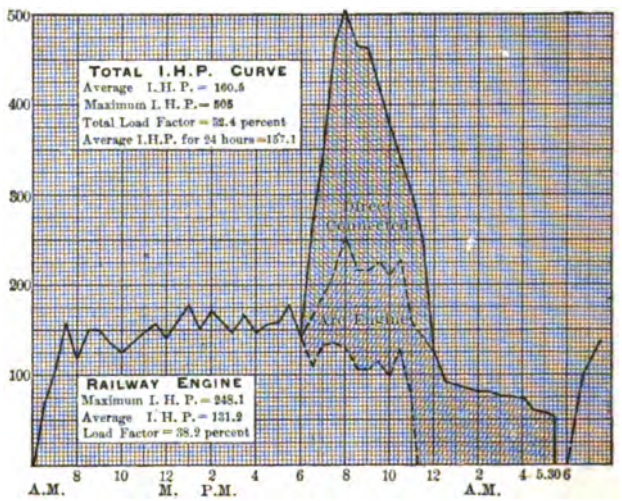

FIG. 319.

place. The first two items are undoubtedly increased to some degree in the separate plants, but not so largely as might be imagined, since the running machinery for the two classes of service must be entirely independent. It is practically impossible for any engine to drive the extremely variable load of an electric railway and regulate with sufficient accuracy to give satisfaction when driving dynamos for electric lighting; and, since the underwriters have taken the matter in their hands, it is not permissible in most places to operate stationary motors from railway circuits, on account of the fire risk involved in introducing grounded circuits into buildings. On account of this separation of the two classes of machinery the real estate

Digitized by Google

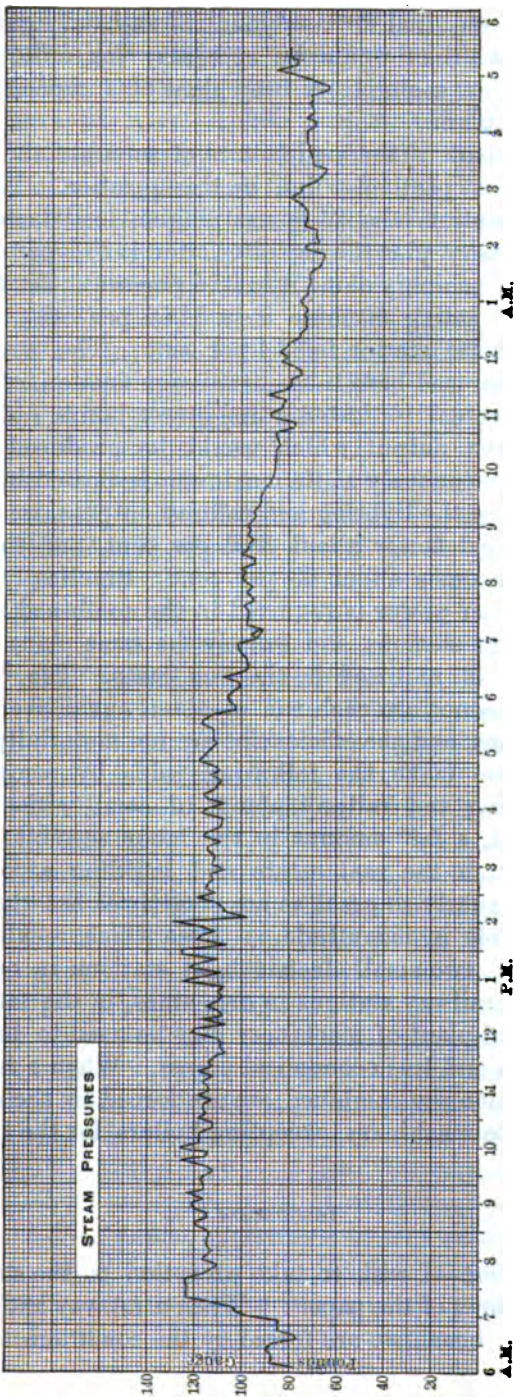

FIG. 820.

Digitized by Google

and buildings required for combined railway and lighting plants must be larger than would be necessary for either a simple lighting plant or a simple railway plant of a capacity equal to the combined plant.

The comparison of the load factors of separate and combined plants throws no particular light on this question. Thus, in the Four Lakes station, the 24 hours' engine load factor for the railway machinery, plus the day alternator, is 38.2 per cent. For the arc-light machinery alone it is 25.6 per cent.; for the direct-connected alternating machine it is 14.56 per cent. The total load factor of the station is 32.4 per cent. The term "engine load factor" is used here in its usual signification, of the ratio between the actual indicated horse-power hours' output of the station and the output which would be produced were the station run continuously at its maximum indicated load. Now, upon separating the lighting and railway outputs, we still have the railway load factor about 38.2 per cent. and the lighting load factor becomes about 23 per cent. Practically the same amount of boiler power is required in the combined stations as in the separate stations, and exactly the same plant in engines and dynamos is required in the two cases. The boilers, engines, and dynamos are each run at about equal average loads in the two cases, and the efficiencies are not materially different.

We therefore make the following gains by combining the electric lighting and railway plants of small cities into one station. First, a fair amount in the labor account; second, a small amount in the real estate and building account. The gains are not nearly so great as are sometimes asserted, nor are they comparable in magnitude to those which result from the combination of two small electric light stations in one, or two small electric railway stations in one, since, in the latter cases, one economical plant of machinery may be used to do the work of two smaller and less economical plants. When a railway and a lighting station are combined, we are forced by the conditions to use separate machinery (excepting boilers) for the two classes of service.

DISCUSSION.

Mr. Wm. Kent.—I wish to take exception to the statement in the last three lines of the paper: "When a railway and a lighting station are combined, we are forced by the conditions to use sepa-

Digitized by Google

rate machinery (excepting boilers) for the two classes of service." That may be so to-day, but I think it is not likely to be so in the future. One engine can drive an electric generator, and after you have got your electric current you can do anything you please with it by transforming it up or down, and use it either for lighting or railway service.

Mr. Jesse M. Smith.—That is possibly true just now in some places, or it may be generally true in the future, as Mr. Kent has said. But at the present time I do not know of any electric railway generator or any engine which can govern close enough to produce satisfactory arc lights or incandescent lights and current for electric railways at the same time, with the same engines and with the same generators, particularly when the current is distributed by the same mains.

Mr. Albert Stearns.—I desire to say that there is a line of railway where they are doing that. They are getting the current right here near Detroit, between the River Rouge and Trenton. At Trenton they are taking off incandescent lights from the wire on which the trolley runs.

Mr. Jesse M. Smith.—I would like to say to the gentleman that that is the plant which I tested and that is reported in my paper read at the Montreal meeting. In this plant, although the speed of the engine is remarkably uniform, the electric lighting cannot be considered commercially satisfactory.

Mr. George R. Stetson.—I would say that I have had a little experience of that kind, driving a line of six cars, and we did most of the work with one engine, and carried our day lighting load and the cars with economy and fair satisfaction. The day lighting is not as critically considered as the evening lighting, being more generally in places where the requirements are not so exacting; but we did get along fairly for a couple of years with an Ide engine of 150 horse-power connected with an 80 kilowatt generator, running our belts double and running the Edison system on the same engine, and we made money by it, and did not receive from the public an undue amount of criticism. I think, as Mr. Kent says, that in a small installation of this kind one engine should be required to do both the power and lighting, in order to make a paying investment of such enterprises.

Mr. C. B. Rearick.—In reply to Mr. Kent's remarks I wish to say that the Brooks Locomotive Works recently installed a plant, consisting of two generators and two engines, each direct con-

Digitized by Google

nected, one of approximately 200 horse-power and the other 100. Both generators operate at 220 volts pressure, the larger furnishing 570 amperes, and the smaller 310 amperes. We run arc and incandescent lights and power from either generator. The load on the generator usually consists of arc and incandescent lamps and necessary power for three large travelling cranes, one large transfer table, several motors applied separately to machine tools, etc., and motors on lines of shafting.

This system decreases the cost of a plant and the floor space required. The two engines and generators and switchboard cover a space 20 by 50 feet.

Prof. W. F. M. Goss.—A question of considerable interest is that of the cost of electric traction, as compared with the cost of ordinary locomotive traction. In this test, reported by Professor Jackson, I notice that the coal consumption is 5.35 pounds per indicated horse-power per hour, which must be considered high for a locomotive under favorable conditions. The minimum consumption for a simple locomotive may be taken as but a trifle over 4 pounds.

Mr. George I. Rockwood.—In a recent issue of a technical journal it was suggested by a correspondent that usually, in electric stations of small size, the boilers show as good an economy as could be expected, but that the losses come principally from transformations which take place after the steam has left the boiler. A test was cited, in which an evaporation of 11.8 pounds of water per pound of combustible from and at 212 degrees was obtained, and a steam consumption of 22.8 pounds per indicated horse-power per hour, while the efficiency of the electrical apparatus was but 44 per cent. This test was stated to be representative of the general practice throughout the country. The test found here, however, seems to show a contrary state of efficiencies. The electrical horse-power divided by the indicated horse-power is 78.9, while the steam consumption is 30 pounds, and the combustible is 4.82 pounds per indicated horse-power per hour. The combustible consumed seems to me to be a large quantity for the evaporation—in fact, it is one-third larger than it need be, even under service conditions.

Mr. Kent.—I do not think Mr. Rockwood quite understands that third line from the bottom on page 1148. It says, electric horse-power divided by indicated horse-power—nothing to do with the boilers whatever. It is only from the engine to the dynamo.

Digitized by Google

Mr. Rockwood.—I would not imply that the item in the line mentioned does have anything to do with the boilers; my attention was drawn to the comparatively very high efficiency of the transformation of indicated horse-power to electrical horse-power, and as the coal consumption is nevertheless very large, I looked further for the figure giving the evaporation in the boilers and that for the steam consumption in the engines, and I see that both figures show extravagance, but more particularly the boilers, as careful firing will give high boiler efficiency, even with a very variable demand for steam.

Mr. Wm. H. Bryan.—I do not quite agree with Mr. Rockwood in the statement that the efficiency of 78.9 per cent. is low. I have made a number of similar tests, and I found that the average efficiency of the engine and of the generator each about 90 per cent., making practically 81 for the two, or slightly less. I take it that means indicated horse-power compared with the horse-power at the switchboard, which includes the mechanical efficiencies of both the engine and the dynamo.

Prof. R. C. Carpenter.—I think it is a notorious fact that the amount of steam used by the different electric plants generally is very large. I think we have tested, in connection with work at Cornell University, something like forty or fifty plants, and we have never found one which was from any standpoint economical, and some have been fearfully uneconomical. We have measured the water of engines which used as high as 100 pounds of steam per indicated horse-power per hour, running, however, in districts where coal cost them nothing except the labor of getting it into the furnace. I think we never yet have tested a plant in which the consumption fell below 20 pounds of water per indicated horse-power per hour, even using the best machinery and the best style of engines. I think what Professor Jackson shows in his test represents fairly the average results from engines installed in this kind of work, and those engines are using from 6 to 8 pounds of coal per indicated horse-power per hour, according to our tests, in only one or two cases falling below 4, and, I think, in only two cases falling as low as 3.

Mr. Keep.—I would like to ask Professor Carpenter what was the lowest water consumption he found.

Professor Carpenter.—I think we never found a result below 22 in electric railroads and 16 in electric lighting stations.

Mr. Storm Bull.—I am quite familiar with the station which

Digitized by Google

Professors Jackson and Richter have tested, and I know that it is not very well run. I believe, as stated in the paper, that nothing was done to improve things from what they were beforehand. As an indication of how this plant was run I might mention the fact that the pet-cocks on the cylinders were left open all the time, the steam blowing right through them continuously.

*Prof. A. W. Richter.**—I wish to make a few remarks in answer to Mr. Rockwood's discussion. As regards the boiler efficiency, better results certainly ought to be obtained with careful firing and good conditions. I again wish to call attention to the statement made in the paper, namely, that the plant was tested under service conditions. No pains were taken to secure a high boiler efficiency. The fireman attended to his duties as though no test were taking place, no effort was made to choose the better coal from the pile, and the persons conducting the test paid no attention to the condition of the boilers. An evaporation of 11 pounds and above calls for a very clean boiler, careful firing, and a good quality of coal. Mr. Rockwood also calls attention to what he considers a high efficiency of the transformation of indicated horse-power to electric horse-power. Comparing the same with results obtained from tests of similar plants, it will be found that, although higher than some, it compares favorably with a number of other tests made.

Following are some of the results obtained, other than those mentioned by Mr. Bryan:

University of Wisconsin test, made in 1893:	Per cent.
Four Lakes Company, Madison	74.8
Cornell tests:	
Rochester Street Railroad	64.8
Buffalo Street Railroad	86.9
Hamilton Street Railroad	75.
Test made by Mr. J. M. Smith:	
Wyandotte and Detroit River Railroad	64.1

* Author's closure, under the Rules.

Digitized by Google

DCLVIII.*

A HORSE-POWER PLANIMETER.

BY EDWARD J. WILLIS, RICHMOND, VA.
(Member of the Society.)

IT is not the object of this paper either to go into a mathematical discussion or to praise an instrument, but rather to show the conditions that exist in a special form of the polar planimeter.

The equation of the polar planimeter is† area = wheel move-

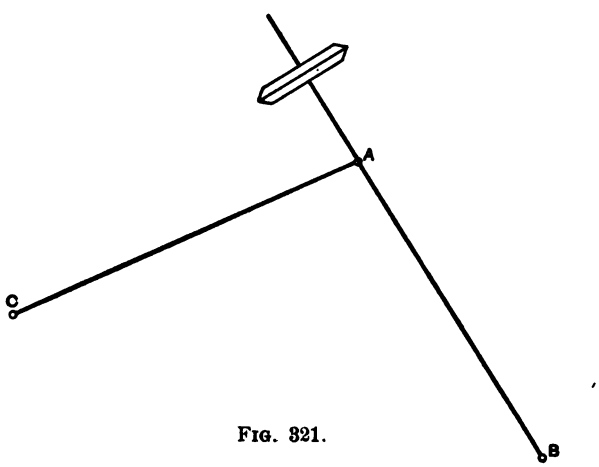

FIG. 321.

ment × length of AB (Fig. 321). That is, after the tracer point B has passed over a figure whose area is a, the wheel movement equals $\frac{a}{\overline{AB}}$ (equation 1).

This equation is independent of AC, and its only requirement is that the axis of the wheel W shall be parallel to AB. It

* Presented at the Detroit meeting (June, 1895) of the American Society of Mechanical Engineers, and forming part of Volume XVI. of the *Transactions*.

† *Stevens Indicator*, April, 1890, and January, 1895, p. 28; also *Annals of Mathematics*, vol. v., p. 10, August, 1889.

Digitized by Google

makes no difference where the wheel W be placed so long as its axis is parallel to AB. It may be at either A or B, or off to either side of AB, or, as is more frequent, on AB extended, as shown in Fig. 321. Wherever placed, its duty is to record move-

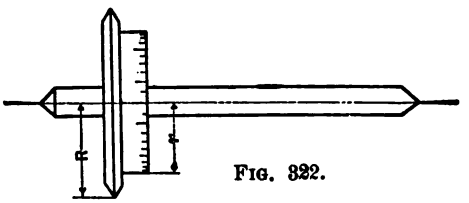

FIG. 322.

ments perpendicular to AB. Movements parallel to AB are, by construction, ignored by the wheel. The recorded movement in a planimeter with circumferential graduations is less than its peripheral movement in the ratio $\frac{r}{R}$ (Fig. 322), and is generally about .85 of the movement called for by the equation

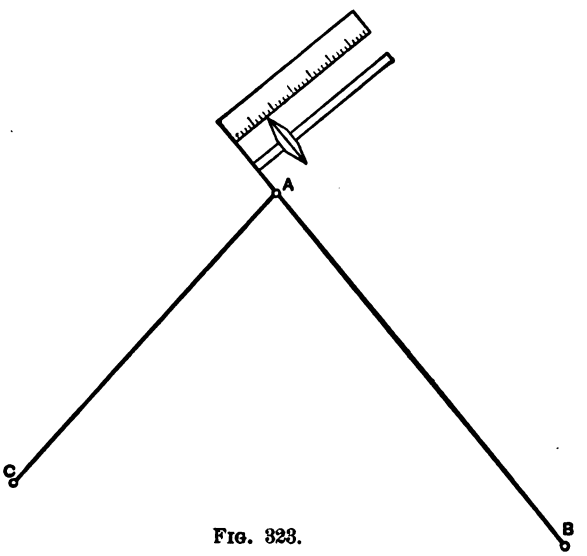

FIG. 323.

(1). It is usual, in order to facilitate decimal reading, to have one complete revolution of wheel correspond to 10 square inches, and the tracer arm is usually from 5 to 7 inches long. Assuming the arm to be 6 inches long, we have, for equation

Digitized by Google

1, the recorded movement for one complete revolution (which corresponds to 10 square inches), $\frac{r}{R} \times \frac{a}{AB} \times .85 \times \frac{10}{6}$ 1.4133 inches.

The recorded movement for 1 square inch would therefore be $\frac{1}{10}$ of this, or .14133 inches. Since these instruments usually claim to read to $\frac{1}{100}$ of a square inch, we note that the recorded movement for $\frac{1}{100}$ of a square inch would be .0014133, or about

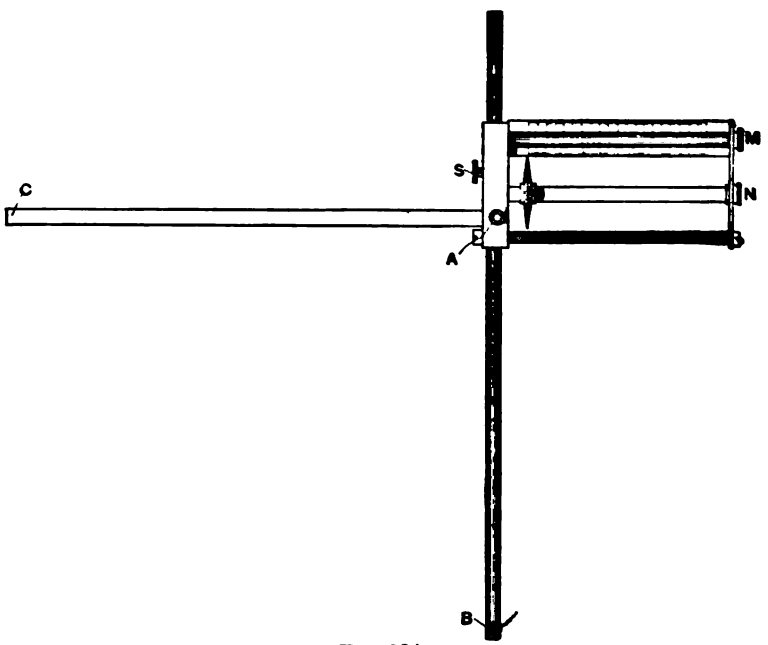

FIG. 324.

$\frac{1}{700}$ part of an inch. When we consider that this instrument scrapes along the paper, and has various joints and parts where lost motion may occur, it is easy to see that only by extremely accurate construction and delicate handling can it be made reliable to $\frac{1}{100}$ of a square inch.

The record of movement perpendicular to AB can be better obtained by construction shown in Fig. 323. In this case all scraping of wheel on paper is avoided; the measured movement is linear and not circumferential; and the factor $\frac{r}{R}$ is done away with. Assuming a 6-inch arm, the measured movement for

Digitized by Google

1 square inch becomes (by equation 1) $= \frac{a}{AB} = \frac{1}{6}$ inch.

In short, a 60 scale with a 6-inch arm reads square inches, or an 100 scale and a 10-inch arm, etc. By having an adjustable tracer arm and exchangeable scales, as in Fig. 324, or, what is simpler, a rotating triangular scale, any of whose six graduated edges can be brought next wheel, we can, by proper selection of scale and arm length, read direct to any unit.

The following are a few applications:

To Read Square Inches.

On full-size drawing, use scale 80, and A and B 8 inches apart.
On drawing 6 inches to the foot, use scale 30, and A and B $7\frac{1}{2}$ inches apart.
" 3 " " " 100 " " $6\frac{1}{4}$ "

To Read Square Feet.

On drawing 3 inches to the foot, use scale 80, and A and B $7\frac{4}{10}$ inches apart.
" $1\frac{1}{2}$ " " " 30 " " $6\frac{3}{4}$ "
" 1 " " " 80 " " 8 "
" $\frac{3}{4}$ " " " 100 " " $5\frac{3}{8}$ "
" $\frac{1}{2}$ " " " 30 " " $7\frac{1}{2}$ "
" $\frac{3}{8}$ " " " 50 " " $7\frac{1}{32}$ "
" $\frac{1}{4}$ " " " 100 " " $6\frac{1}{4}$ "

To Read Square Yards.

On drawing 1 inch to the foot, use scale 80, and A and B $7\frac{3}{10}$ inches apart.
" $\frac{3}{4}$ " " " 100 " " $5\frac{1}{16}$ "
" $\frac{1}{2}$ " " " 40 " " 9 "
" $\frac{3}{8}$ " " " 60 " " $7\frac{6}{10}$ "
" $\frac{1}{4}$ " " " 100 " " $5\frac{3}{4}$ "
" 10 feet to the inch, " 80 " " $7\frac{3}{10}$ "

The mean effective pressure of an indicator card equals $\frac{\text{card area}}{\text{card length}} \times$ spring. If we turn scale next wheel which corresponds to spring with which indicator card is taken, and set points A and B to card length, the reading $=$ scale $\times \frac{\text{area}}{AB} =$ spring $\times \frac{\text{card area}}{\text{card length}} =$ M. E. P.

The horse-power of an indicator card is mean effective pressure $\times \frac{\text{piston area} \times \text{stroke} \times \text{revolutions per minute}}{33{,}000.}$

Digitized by Google

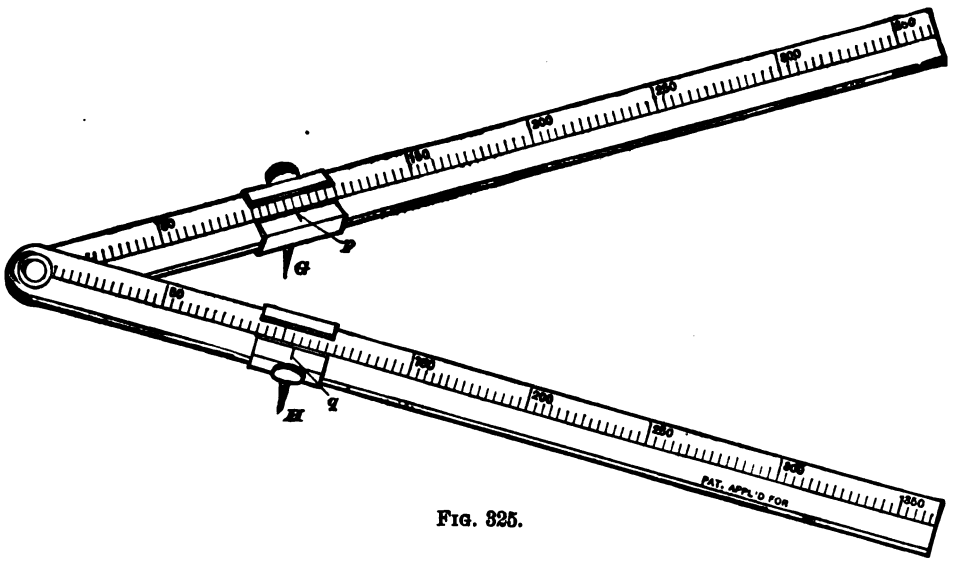

FIG. 325.

The writer has published a table giving the value of $\frac{33{,}000}{\text{piston area} \times \text{stroke}}$ for engines from 8 inches × 8 inches to 110 inches × 72 inches.

The instrument shown in Fig. 325 has sliding pointers which can be clamped to any reading on each arm of hinged scale.

Suppose lines p and q each to be clamped to reading corresponding to revolutions per minute. Suppose points G and H

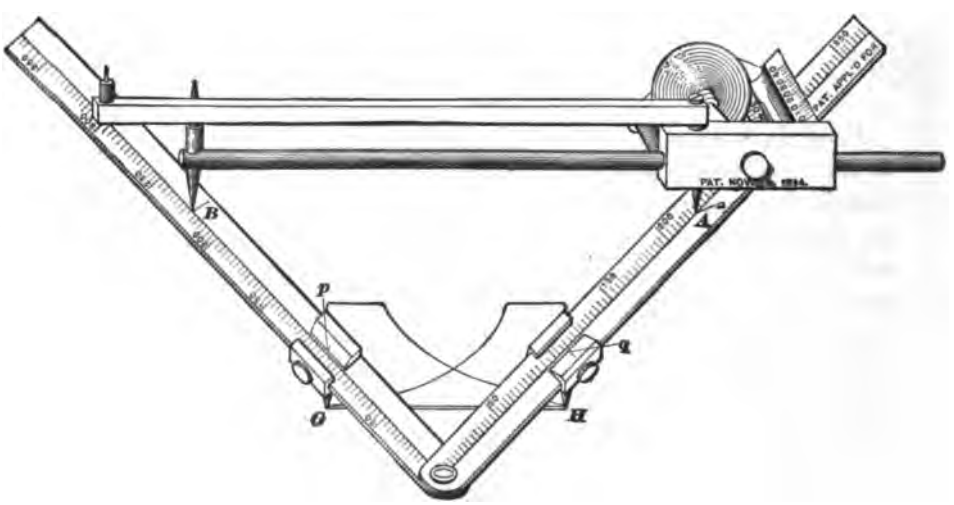

FIG. 326.

Digitized by Google

to be set, as in Fig. 326, to card length, and A and B to reading corresponding to value $\frac{33{,}000}{\text{piston area} \times \text{stroke}}$, as given in table: then, if scale be next wheel which corresponds to spring with which indicator card is taken, the reading, on going over card, equals spring $\times \frac{\text{area}}{AB}$. By similar triangles (Fig. 326),

$$AB : \frac{33{,}000}{\text{piston area} \times \text{stroke}} = \text{card length} : \text{revolutions per minute},$$

$$\text{or } AB = \frac{33{,}000 \times \text{card length}}{\text{piston area} \times \text{stroke} \times \text{revolutions per minute}}.$$

Substituting, we have

$$\text{Reading} = \text{spring} \times \frac{\text{area} \times \text{piston area} \times \text{stroke} \times \text{rev. per min.}}{33{,}000 \times \text{card length}}.$$

$$\frac{\text{spring} \times \text{area}}{\text{card length}} \times \frac{\text{piston area} \times \text{stroke} \times \text{revolutions per minute}}{33{,}000}$$

$$= \text{M. E. P.} \times \text{constant} = \text{H.P.}$$

By starting the tracer point at the intersection of the expansion curves, and going first over one card and then over the other without removing tracer point from paper, the final reading will be the total horse-power of the engine.

DISCUSSION.

Prof. D. S. Jacobus.—Mr. Willis presented one of his planimeters to me a short time ago, and I tested it in various ways, and find that it does all that he claims for it. I think the special field for his planimeter, as well as for any similar averaging instrument, is in working out results quickly where there is no necessity for great refinement. In running a test of an engine we ordinarily calculate the horse-power, together with the water-rate, and see where we stand hour after hour. For this class of work I know of no instrument superior to the one which Mr. Willis has devised. It is an instrument which is easy to read, as the record is made by the movement of the wheel directly along the edge of a white scale with black graduations.

Digitized by Google

Another field for this instrument will be with the practical engine-driver, who could be taught to set the instrument to obtain the horse-power directly from the scale, and, if desired, he could preserve a record of horse-power from day to day.

There is an error in this instrument, due to friction, which is greater than in a nicely adjusted Amsler instrument, but for such work as is described above it is negligible.

Digitized by Google

DCLIX.

TOPICAL DISCUSSIONS AND INTERCHANGE OF DATA.

XXXIst MEETING.

No. 659—124.

124. Can it be made practicable to design a machine which shall unite the merits of both the milling machine and the planer? Is not this problem a paradox in machine construction?

Mr. Henry Binse.—At times milling-machine literature has been marked by extravagant claims which have tended to hinder rather than to aid the growth of this most useful machine, because people have been led by them to look for economical returns from it under conditions for which the tool was not suited. For example, I remember a very fine slabbing machine which had been bought by a large engine company under the impression that it would replace their planer; but, as their engines were very carefully built, in small quantities, they soon discovered that their purchase was a mistake.

As an instance of these misleading statements, there was a paper read some years ago on the milling machine, which passed without criticism and had a wide circulation, and which recommended the milling machine for jobbing-shop use, where there is a great variety of work with little duplication, for shops like the engine works just mentioned. I have been unable to find an instance of the economical use of the milling machine under these circumstances; in fact, the experience is universal that the cost of the cutters, arbors, bushes, devices for holding the work, in addition to the extra time needed for setting the work (for it generally takes longer to set a single piece on the miller than it does on the planer), all these items make the milling machine a very expensive tool for general work—far more so, indeed, than the shaper or planer.

Defining, in general, the respective fields of usefulness of the two machines, the planer may be said to be a tool for facing plane

Digitized by Google

surfaces of all kinds, while the milling machine may be called a tool for rapid and accurate duplication, using a revolving cutter. The two types do not compete; they work side by side. Wherever there is work enough of one kind to keep a planer busy, then is the time to consider giving that work to a milling machine.

A year or so ago a comparison was made, in a paper read before the Society, between the working times of a slabbing milling machine and a planer, greatly to the latter's disadvantage. The figures given were very remarkable, suggesting the well-known measured mile records of our cruisers. Accepting the correctness of the observed times, the comparison itself was unfair, because the milling machine in question was a tool especially adapted for cheap duplication of exactly that class of rough work. We might as well compare the time of cutting screws in a turret screw machine with the time for similar work in the lathe. There is no mystery about the output of special tools. Designed for certain kinds of work only, they excel in that line and are fit for nothing else. It is to be regretted that in that paper no figures were given of the cost of getting ready to do the work. This is a most important item, usually. Last winter, having some large face cams to cut, I had an excellent opportunity to observe the cost of new milling operations. I kept a very accurate cost record, and, while the actual time of cam cutting was 114 hours only, 80 hours were spent in making the cutters, arbors, bushes, collets, straps, and so on, for the job. Although the cost of milling cutters has been much reduced of late years, they are still expensive, the large ones especially so. Mr. H. L. Arnold says, in one of his recent excellent papers on milling practice, "that the use of large cutters, although suggested by theory, is practically prohibited by their great cost."

The record of the incidental work is as much a part of the cost of milling as the actual milling time. It is also characteristic of all work done by the milling cutter that the cost increases very rapidly with the size of the piece to be operated upon, so that it is out of all proportion more expensive to mill large than small work. In fact, at the present time, it seldom pays to mill large pieces. In addition to the greater cost of large milling, there comes decreased accuracy, for accuracy of milling operations becomes more difficult to attain as the size of the piece increases. It is very costly to mill large work, and more expensive still if accuracy be desired.

Digitized by Google

Milling demands greater care in regard to the quality of the metal than planing. The piece of work must be soft, and, if possible, free from scale. We all know that we cannot avoid occasional hard castings, hard spots in castings, castings with the sand burnt into the skin, or castings with chilled faces. While accidents like these may ruffle the planer-man's calm of mind, the milling boss is knocked down by them, for they may ruin a costly mill gang in a few minutes. Where much milling is done it is usual to anneal and pickle all the castings and forgings; and I have known even the fine sand of excellent malleable iron castings to dull rapidly a set of milling cutters. A hard, bad casting may be planed at the cost of a little time and patience; but it is generally impracticable to mill hard iron. This is a trifling drawback for small work; but it would be of importance should we wish to use the milling machine for the same variety of work as the planer.

At present there is no reason to look for any gain from the use of the milling machine, where there is little duplication, or for medium and large work, on account of conditions entirely independent of the design of the machine. Moreover, there is little to encourage the inventor who may wish to design a machine which will cover as great a range of different forms of work as the planer. The revolving cutter demands an amount of rigidity in the arbor and in the machine which, in the planer, is not at all essential. All of us have seen very accurate work by a skilful planer-hand, when the tool deflection was visible to the naked eye at a distance. This is impossible in milling practice. It is on this account that while the ordinary commercial planer need not be, and indeed is not, a nicely fitted tool, the fitting of the milling machine cannot be too perfect. To the same cause, moreover, must we ascribe the simple forms of all existing successful types of milling machines. They are direct in design, not from a lack of inventive capacity, but because simplicity is a condition precedent to success. It must be apparent, then, that it is most difficult, perhaps impossible, to construct a practical milling machine which shall have the compound and swivel tool movements of a planer crosshead.

Are these views supported by the past growth of the machine? After half a century of development we find an endless variety of milling machines which have been designed especially for certain jobs. There are gear cutters, slabbing machines, plain and uni-

Digitized by Google

versal machines, duplex, triplex, and quadruplex machines, key-seaters, vertical spindle machines, vertical face machines, column millers, circular machines, profiling machines, and so on, through an endless list; each year brings forth new designs.

There are many styles, each one excellent for its special purpose. The output of these tools is almost beyond belief, in many instances; and, without doubt, this is the promising field for the milling-machine designer.

In conclusion, I would call attention to what is, to my mind, a serious misstatement, and it is one heard very frequently: that the merits of the milling machine are not well understood. On the contrary, it seems to me that the milling machine is the most distinctly American of all the machine tools. Fifty years ago we were the first to recognize the paramount importance of this tool for interchangeable duplication, and to-day we find that every existing successful type of milling machine has been invented and developed in the United States. If we do not understand how and when to use the milling machine, where is this machine better understood? It has been my experience that the machine is bought just about as soon as there is any use for it, and sometimes sooner than is strictly economical.

There was a humorous case of this which comes up before me. I was visiting the perfectly equipped workshop of one of the best mechanics in the country, and I was very much impressed by a line of beautiful but expensive milling machines, but it was not clear to me that he could have much use for them, so I asked what work did he do with them. In reply he said: "The planer is not in it with these machines." As this was no answer to my question, I looked around, and I saw that at each planer there was a heap of castings waiting to be finished, while the floor was perfectly clean around the millers, and a thin layer of dust showed how seldom they were used. The operation of milling is so pleasing to the eye that it sometimes misleads our judgment.

It is rare that there is any economy in milling in the first stages of the manufacture of a new machine. Milling-machine economy is a function of the duplication and the product.

Mr. William Kent.—I hope before that paper of Mr. Binsse's is permitted to pass we may hear from some of the attorneys on the other side of the question, such as Mr. Grant, who has written a great deal on milling machines, and Mr. Arnold. I am much surprised to hear the argument of Mr. Binsse that a milling machine

Digitized by Google

is not a good machine in a jobbing shop. I know of cases where the milling machine is gone to constantly for little jobs. If you have a good holding vise on the milling machine, you can sometimes do small jobs on it with more facility than on a planer. I think the milling machine a machine which has a cutter which goes around, and a planer has a tool which goes straight ahead. I believe that the Daniels planer for planing wood is a kind of a milling machine, and it has been in use a great many years, and it is not a paradox at all.

The President.—The Daniels planer might easily and properly claim to have been the origin of the milling machine.

*Mr. W. S. Rogers.**—The opening discussion is a surprise to me, coming, as it does, from Newark, N. J. In the first place, I want to dispute the statement that cutters are expensive. My experience is that they are not, considering the amount of work which they do and the length of time they last. The speaker says the milling machine is not a machine for a jobbing shop. If I was going to start a jobbing shop to-day one of the first things I would want would be a milling machine. But I would not go out and buy the first milling machine I saw and put it in the shop. I would have a milling machine built to do job-work. There is not such a machine on the market. What is wanted in our shops is a milling machine built on a heavy planer pattern, so that we can go all around different shapes. But there is one rock right square in the path of having that done—there is no manufacturer who wants to put the money in for a machine, and the inventor is afraid to guarantee it. But it can be done. We have heard to-night Mr. Allison and Mr. Holloway tell us how they worked fifty or sixty years ago—what was done without tools. Fifty or sixty years from now we will have young men sitting here and smiling at our telling about the planer and the old engine lathe, for they will have milling machines everywhere, and they will turn out ten times as much work as we do now, and ten times better. That is what they can do with milling machines. If I had my way to-day I would scrap every engine lathe with its old foot-stock and back-gear. They are a nuisance. Nothing would excel a shop full of turret lathes and milling machines. I know there is no limit to the speed of the cutters. I have run up to eighteen inches per minute table travel, and the work was accurate enough, while the

* See also discussion on topic No. 98: "To what extent can the milling machine be used to replace the planer in daily operation?" Vol. XIV., p. 589.

Digitized by Google

cutters stood up under it easily. I did not pickle all the castings, either. When the casting came in hard from the foundry I sent it back where it belonged and charged them for it. The planer will always be with us, just the same as the old shaper is. It is good in an emergency, although you don't want a shop full of planers. What we want is a good strong milling machine built to do all the things which a planer can do now, and that machine is possible. One of the things, as I said before, which keeps us back from doing it, is that so many engineers accept the statement that "it is impossible," and let it go at that. There is nothing impossible in designing machines to do the kind of work we want to do.

Mr. Chas. K. Norton.—I think the speaker is right about the milling machine. The designer who would have the hardihood to design such a machine to-day would lose his position, and the manufacturer who would dare to build it, and put it on the market, could not sell it, for the people who buy such machines would not be willing to pay for the iron the designer had put into it. Our milling machines of to-day are a good deal farther ahead than our ability to use them. The reason why we do not succeed better with the milling machine is simply because we do not understand it. I am surprised every day to see the new things which some young man, who has not had half the experience which a good many of the rest of us have had, will do with a milling machine, without any expense whatever, and a great deal quicker than you could go to the planer and place the tool in it. I saw a job the other day where, if the young man had gone to the shaper to do it, it would have taken at least an hour's time; and I will venture to say the cutter did not cost over fifty cents, and he slipped it into the vise, and it was out of it in ten minutes.

Mr. Fred. J. Miller.—I shall not attempt to answer the question categorically, but some points brought up by Mr. Binsse should perhaps receive further attention before being passed over. The developments of the past few years have, I think, shown that we do not very clearly or very certainly perceive the exact limitations or the possible maximum production of either the planer or the milling machine. Much more good work is expected and actually obtained by experts from both of them than was the case a few years ago, and progress has been so rapid that in many cases experts, devoting their time to but one class of these machines, have innocently been making comparison with machines

Digitized by Google

of the other class which are by no means fairly representative of the present practice. It is, I think, much more difficult to make a fair comparison between the two classes of machine tools than would at first appear to be the case.

Men tend toward partisanship somewhat in these matters, as well as in political affairs, and unless we watch ourselves closely, we are liable to become thereby somewhat blinded. Extravagant claims have, no doubt, been made for the milling machine, but still it is a fact that many of the claims made for it, which a few years ago seemed very extravagant, are to-day being realized, and I think history will repeat itself along this line.

The purchase of a slabbing machine, to do milling work upon steam engines, carefully built, in small numbers, has been referred to. In this case I think the mistake was in the choice of a machine, and that the milling machine to use in such work is one which uses end or face mills, instead of slabbing cutters. Such machines, in the present state of the art, are far more efficient for producing plane surfaces upon cast iron worked under the conditions named, and do not require to be very much, if at all, more rigid than a planer should be for the same work. Face or end mills cut much more easily than wide slabbing cutters, and are generally much less expensive to maintain.

As to the cost of cutter arbors, fixtures, etc., used with milling machines, it should be considered that, when once a tolerably complete outfit of these has been provided, it requires thereafter little expense for additions to them, or to maintain them. We might imagine, as an extreme case, a man having fifty different jobs to do on a new milling machine during the first month of its service, and that no single cutter would answer for more than one of them. He might easily conclude that milling machines are expensive luxuries, on account of the cost of cutters. But, as a matter of fact, he would find that in a short time his stock of cutters on hand would fit almost any case, few new ones would be required, and the cost of cutters would thenceforth be very small in proportion to the work done by them.

In too many cases those who essay to use milling machines are too easily discouraged by the outlay necessary to provide a fairly complete assortment of good milling cutters, and on that account fail to get the returns which milling machines are capable of giving in the way of real economy.

As to the increased cost of milling large work, I can only say

Digitized by Google

that this applies also to planing, usually. If we have a casting weighing 5 tons, with a spot upon it 12 inches wide and 4 feet long, to surface by planing, it will cost very much more to plane it than it would if the casting weighed only 200 pounds. It takes much longer to place the larger casting upon the planer platen; the planer needs to be much larger, and the power required to move the work back and forth while being planed will be considerable. A type of milling machine is now coming into common use in which such a casting is merely placed upon a stationary, or, perhaps, a rotating, platen, near the floor level, and remains still while a face mill operates upon it; the face mill being usually made up of a disk holding inserted teeth, and driven by a spindle supported in a saddle having a vertical feed motion and traverse upon an upright, which, in turn, has a horizontal feed motion and traverse upon the bed of the machine. Such machines also bore and drill when required, but, considered simply as milling machines, and comparing them with planers, are more economical the larger and heavier the work they are called upon to do. Using any type of milling machine employing end or face mills, I do not think it is the usual experience to find the cost of large work disproportionately heavy as compared with smaller work milled, or with similar large work planed. In fact, a favorite form of milling machine for such work is almost precisely like the planer, the only essential difference being in placing a vertical spindle upon the saddle in place of the usual clapper-box and tool holder. I cannot see that such a machine is essentially different from the planer in respect to its adaptability for doing large work, and it certainly offers exactly the same facilities for fastening work to its platen.

While it is perhaps true that the milling machine is better understood here than in other countries, it is still the fact, I think, that it is not generally and thoroughly understood here. It is quite a common thing for an expert to double and, in some cases, quadruple the rate of feed previously used in cast iron, and thought to be all which the cutters or the machine would stand; and it is too little understood that, where jobs are constantly changing on a milling machine, it is not a boy's job to run one, but a job on which a skilled mechanic will prove most economical. And when the work is of such a nature as to make it a series of repetitions of the same operations, there must still be skilled supervision, and good workmanship in cutters and fixtures.

Digitized by Google

I consider the question of the relative merits of the planer and the milling machine to be an indeterminate one. Whether a planer or a milling machine should be put in for a given line of work will sometimes be a question not easily solved, and its solution should not be attempted in any but the simplest cases, except by an expert in such matters. In a well-known shop, where they build very many milling machines, and thoroughly believe in them, they nevertheless use many planers on their own work, and have recently put in a number of them.

While it is true that duplication of pieces or operations has an important bearing on the question, yet the extended use of milling machines in tool rooms, where the work is constantly changing, and there is relatively little duplication, seems to indicate that its economy is not strictly "a function of the duplication of the product," but that the character of the work to be done has an important bearing on the matter also, independent of the number of duplications of any piece or operation.

No. 659—125.

For filtering oil having very finely divided metallic particles in suspension, what have you found to be the best filtering material, either for one operation or in a series?

Mr. G. W. Bissell.—The writer uses an oil filter consisting of two shallow rectangular tin trays and some wide lamp-wicks. One of the trays, slightly smaller than the other, is supported within it on two blocks, which raise it an inch or so from the bottom of the larger pan. The wicks are laid in the upper pan so as to hang over its edges into the lower pan.

The oil to be filtered is poured into the upper pan. A drip cock in the lower pan, and a cover for the whole, complete the apparatus. No quantitative tests have been made, but the results, as far as the eye can judge, are good.

Digitized by Google

DCLX.

EDWARD F. C. DAVIS.

IN MEMORIAM.

FOR the first time in the fifteen years of the existence of the American Society of Mechanical Engineers that body has been called to deplore the loss of its presiding officer while in active fulfilment of his duties. Mr. E. F. C. Davis, elected president at the annual meeting in December, 1894, was killed suddenly by an accident while riding his horse in the Central Park of New York City on the evening of Tuesday, August 6, 1 95. The exact nature of the disaster is not known, as he was riding alone; but the supposition advanced is that the horse became unmanageable from some reason and fell upon his rider. Mr. Davis had long been an expert in all out-door sports, and particularly in horsemanship, which has made his untimely death from this cause so much the more a shock because a surprise and unexplainable. He was found by guardians of the park still living, but passed away without regaining consciousness.

Mr. Davis was born August 13, 1847, at Chestertown, Md., so that he was nearly forty-eight years old. He received his education and graduated in 1866 at Washington College in his native State. His family connection had been mainly practitioners of law, and he had been expected to follow their example; but a decided mechanical instinct, evinced in the construction, while a schoolboy, of a small working engine and other appliances, induced a reluctance to the law, and a strong desire to try his fortunes in the shop. Without much encouragement from his family, he applied to several establishments, and finally was taken as apprentice in the shops and drawing-room of the Philadelphia Hydraulic Works of Brinton & Henderson. His later service, during the twelve years before he entered upon the work which was to tell most strongly upon his development, and to give him his repute and standing, was successively with the New Castle Machine Works, New Castle, Del.; Atlantic Dock Iron Works, Brooklyn; Athens Brothers' Rolling Mill, Pottsville, Pa.; and the Colliery Iron Works of the same place.

Digitized by Google

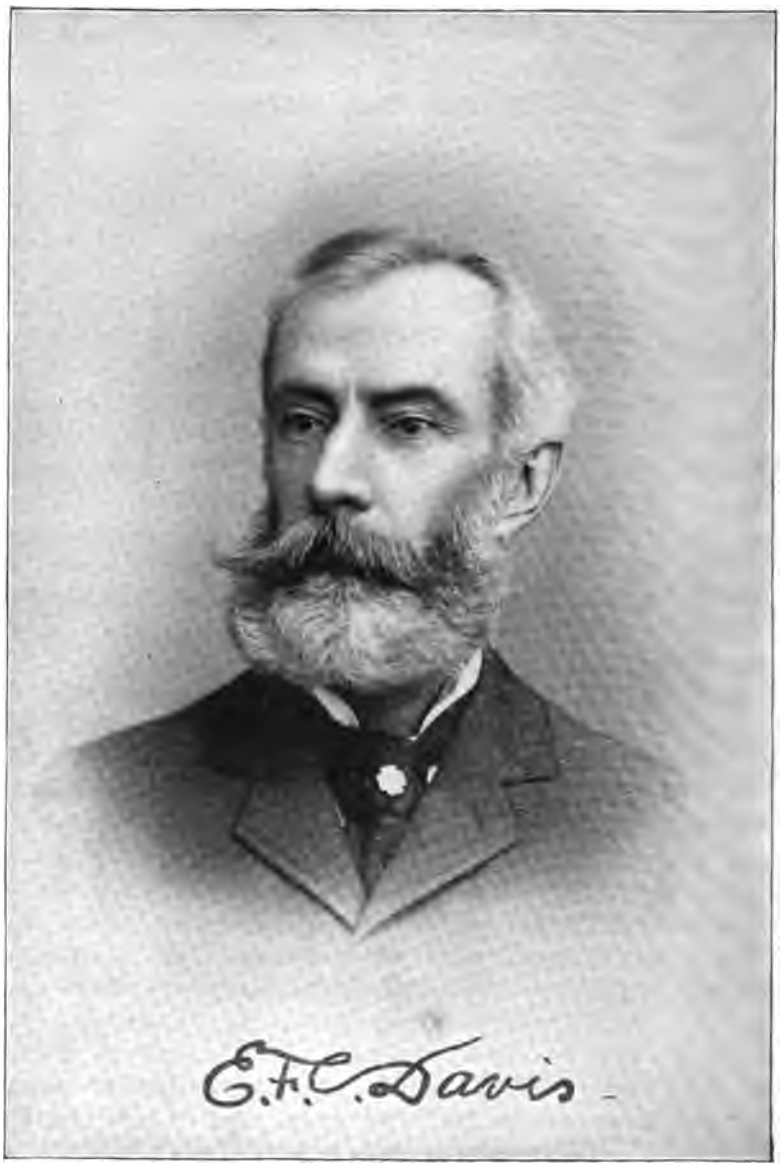

Digitized by Google

It was from the last engagement that he was summoned, in March, 1878, to become a principal draughtsman for the Philadelphia and Reading Coal and Iron Company; and a year later, when but thirty-two years of age, he was made superintendent of their Pottsville shops. It will be recalled that these years from 1880 to 1890 were a decade of special difficulty in Pennsylvania and everywhere for the controllers and organizers of shop systems, and Mr. Davis' success in meeting and adjusting strikes of great magnitude, and in securing an accepted and popular transfer from a wasteful day-rate method to a successful and permanent piece-rate plan, gave him a standing and experience in this class of professional work which was one of his great claims for the consideration and esteem of his colleagues. He had, furthermore, the task of putting the shops themselves into condition for building and repairing mining and other machinery for an extensive colliery system, and his contributions to the *Transactions* of the Society cover both of these divisions of practice.*

A friend has said of him: "To him fell the task of organizing the shops, to put them in a condition for building and repairing mining machinery, and the work was carried out in a fashion which indicated that, as a designer of machinery and as an organizer of working operations, he had few equals."

In 1890 Mr. Davis was earnestly solicited by the management of the Richmond Locomotive and Machine Works to leave Pottsville and come to Virginia, in order to become their general manager, so as to bring into that enterprise the proven skill which he had shown in the handling of large establishments employing numbers of men on varied classes of work. The competition in this field of manufacture made it difficult for the less thoroughly organized to meet the better organized in the field of

*"Photographs of Mine Interiors," vi., 26; "Steam-pipes for Collieries," xi., 215; disc.: bits of engine-room experience, x., 706; corrosion in a boiler drum, xii., 525; corrosion of steam drums, xv., 1101; divergencies in flange diameters, ix., 132; gain-sharing, x., 622; gauge for sheets and plates, xiv., 34; heat transmission through, etc., xii., 1043; lubrication, x., 814; novel hammer-head, vi., 80; oxidation of metals, vi., 633; performance of Worthington pumping engine, xii., 1013; rapid melting in cupola, xii., 1046; shaft governors, ix., 318; soft castings, ix., 338; speed of gears, vi., 863; steel castings, xii., 717; stocking and reloading coal, ix., 273; systems of catalogues and indexes, vi., 864; temperature effect on the strength of iron and steel, x., 718; the premium plan of paying for labor, xii., 767, 771, 773; tractive forces of leather belts, x., 773; tubular boilers, vi., 118; two rope haulage systems, xii., 640; wrought-iron scrap in castings, ix., 341.

Digitized by Google

railroad development in the growing South, which, with such organization, the Southern management might have a right to claim for itself. Mr. Alfred H. Raynal, member of the Society, was invited at the same time to bring to the assistance of the works his knowledge and experience of marine engine requirements and general shop practice for the contract awarded them for the building of the United States battle ship *Texas*. It will be recalled that at the time of the Richmond convention, in December, 1891, these two gentlemen were very active in their service of the Society's interests. Mr. Raynal returned to the North soon after, but Mr. Davis remained, under a most favorable contract, for a long term, and was most helpful in the reorganizing of the labor system, in cheapening the cost of product while raising the earnings of the men, and particularly in the development, in the later years, of the compound locomotive. The Richmond compound locomotive, which has been making such a fine record on various Western railroads at this writing, was designed by him, and was built under his supervision. He was an enthusiastic worker in this field, and was ambitious to secure a position where his labors to improve railroad motive power could be continued.

Personal reasons, however, induced him to give favorable consideration to a most tempting opportunity to connect himself with the C. W. Hunt Company of New York City, and he took up his residence, in the spring of 1895, on Staten Island, where the works of this company are located. His duties brought him into closest relation with the president of that company, and this gentleman, writing at the time of the shock of his death, speaks in the warmest terms of the pleasure and helpfulness of the arrangement; and in the neighborhood of New York City a career of further usefulness and reputation seemed to be just opening when death cut the promise short.

The choice of the American Society of Mechanical Engineers fell upon Mr. Davis for its president in 1894, while still general manager of the locomotive works; and the selection seemed specially fitting, because the interest which he felt in the development of the locomotive engine, his success in the management of men on the piece-work system, and his wide acquaintance among the Southern representatives of the profession, would strengthen the Society, broaden its reputation, and enrich its *Transactions*. The choice, also, was rightly deemed a most fitting one by reason

Digitized by Google

of his personal character and worth. He had become a member of the Society in 1881; served as vice-president in 1891–93; and as presiding officer at meetings of the Council of the Society and at its Detroit convention, in June, 1895, he evinced great dignity, and attracted to himself the members by the charm of his manner and the clear comprehension of all matters brought to his attention. He was very quick of apprehension, and prompt in deciding matters upon which he was called to act. Of the charm of his genial and affectionate nature as a man it is difficult to speak with a measured reserve. He was a man of warm social tendencies, and with an equal capacity for making warm personal friends. He has left a wife and a family of four children. His funeral, at Pottsville, Pa., was attended by many of his old friends, associates, and employees, and by a number of members of the Society.

The Council of the Society has placed upon its records the following minute:

"The American Society of Mechanical Engineers desires, through its Council, to spread upon the records of the Society and of its Council, a minute expressive of the respect and regard which its members feel and seek to make public upon the sudden and untimely death, from an accident, of their colleague, Mr. E. F. C. Davis, President of the Society.

"The formal mould of memorial resolutions, in which a corporate body ordinarily records its action, seems inadequate for a proper voicing of the spirit which pervades the Council in the presence of the death of one whom its members had known so well, and whom they had learned to admire and love. His wise and mature judgment, his business and professional knowledge, his conservative yet energetic counsel, and his courteous consideration for others, had made him one from whose administration of the Society's affairs the highest hopes had been entertained.

"Although with such grief the stranger intermeddleth not, yet the Council would presume to express their heartfelt sympathy with those nearest and dearest to Mr. Davis, upon whom this blow has so crushingly fallen."

Digitized by Google

DCLXI.

ECKLEY B. COXE.

IN MEMORIAM.

FOR the second time in the history of our Society death has invaded the ranks of our past presidents, and taken from us our genial, warm-hearted friend and counsellor, Eckley B. Coxe, of Drifton, Pa.

To the members of the Society who had the pleasure to know Mr. Coxe personally, the news of his somewhat sudden death came with a peculiar sadness; and even now it seems hard to believe that we shall meet him no more, shall never again be welcomed by his charming manner, encouraged by his never-failing hopefulness, made wiser by his counsel, nor buoyed up by his words of cheerfulness and courage.

Eckley Brinton Coxe was born in Philadelphia, June 4, 1839; died at Drifton, Pa., May 13, 1895. On June 27, 1868, he married Sophia G. Fisher, daughter of Joshua Francis Fisher, Esq., of Philadelphia. He was the son of Judge Charles Sidney Coxe, and the grandson of Tench Coxe, who was prominent in the early history of this country, and at one time Assistant Secretary of the Treasury under Alexander Hamilton. The immense tracts of coal lands purchased by Tench Coxe, and held intact during the lifetime of Judge Coxe, while at the time of their purchase not esteemed of much value, were, by the skill, engineering knowledge, and industry of our past president, developed to such an extent as to make the estate one of enormous value, mining in one year a million and a half tons of coal.

The surroundings of Mr. Coxe in early life were such that he might, had he so chosen, have led a life of inglorious ease, free from business cares and responsibilities; but he early chose rather to take his place among the workers, and to assume those obligations to himself and his fellow-men which in after life so endeared him to all with whom he came in contact. After graduating from the University of Pennsylvania, and taking a post-graduate course

Digitized by Google

Digitized by Google

in that institution in the Department of Mining, he entered as an assistant in the laboratory of John F. Fraser, Professor of Chemistry and Physics. In 1860 he went to Paris, and spent two years at the School of Mines, and then went to the Mining School at Freiberg, Saxony, as a pupil of Professor Weisbach, whose book on mechanics he afterwards translated, and whose library he purchased after the professor's death. On leaving Freiberg his studies were finished, so far as university and student life were concerned, but not otherwise; for all his subsequent life was spent in studying out better methods of mining coal, especially as they pertained to the anthracite regions, and better methods of handling and transporting it; and, better still, he devoted himself to finding improved methods of using it for the production of steam power. His ideas were often new, and not in accordance with established usages; they were discussed, criticised often, and condemned; but oftener they were copied by his neighbors, until "Drifton practice" was accorded a high place in coal-mining circles.

While the enormous waste which for years had been going on in the anthracite regions had been the occasion of much comment by others, it was left to our ex-president to give to the subject that careful, thoughtful consideration which it so well deserved. The State of Pennsylvania, mindful of the loss which was daily occurring in the immense and ever-increasing culm banks which for years had been accumulating about the shafts of the anthracite mines, several years ago sought the advice and aid of Mr. Coxe, either to reduce the quantity of small coal mined, a large part of which found its way into the waste of the culm piles, or else to plan methods by which it might be made useful as a means of making steam, or otherwise. How well Mr. Coxe succeeded in bringing this about by his writings, his works, and his practice is well known, not only to the members of this Society, but to nearly every consumer of steam along the Atlantic coast; indeed, to-day, not only does no fine coal go to the culm pile, as of yore, but the culm banks of many years' accumulation are now being worked over, to reclaim and save what had previously been considered a worthless product.

While Eckley B. Coxe did much for his State, and for the industry in which he spent the best years of his life, he will be remembered longest for what he did for his associates and employees. The limits of this monograph forbid a lengthy or further descrip-

Digitized by Google

tion of this charming feature of his life and character. Suffice it to say that he was a man of the people; he lived among his workmen, caring for their interests and comforts in a manner far too infrequent among those in his position. He built schoolhouses for their children, and employed earnest and competent teachers to instruct them, not only in the commoner branches of education, but in those higher branches pertaining to the art and to the science of coal mining; he built churches wherein all were taught their duties to each other and their obligations to their God. Together with his noble but invalid wife, he looked after their physical wants as well, caring for their necessities when in sickness and trouble; and when his great heart ceased to beat, and his remains, at his request, were laid to rest in Drifton's burying-ground, there were no tears shed above his new-made grave more sincerely sorrowful than were those that fell from the eyes and over the furrowed cheeks of his old-time miners and workmen.

As an illustration of the esteem in which he was held by his neighbors, the following extract from a private letter, written by an old friend,* is made by permission:

"Your letter of the 23d is at hand, and it finds me sick at heart over the death of Eckley B. Coxe, an old and dearly loved friend. We became acquainted when I first came into the Lehigh Valley, over thirty years ago, and our acquaintance soon ripened into friendship, and the ties have all this time been constantly growing closer. After the death of his most trusted friend and confidential partner, Mr. Brock Ely, who was also my intimate friend, Mr. Coxe, in speaking of him, and lamenting his death, said that, after Mr. Ely, I had his confidence to a greater extent than any one else outside of his brothers, and he has on more than one occasion since that time given me evidence of the truth of what he said.

"To know Mr. Coxe intimately was to love him. He was rich in this world's goods, but did not seem to know it, except to do good. He had the means to live a life of leisure had he been so disposed, but he chose instead a career which imposed upon him the severest kind of labor. He was born a mechanical engineer of the highest order, which, with the means under his control and his indomitable energy, enabled him to accomplish great results in the line of his profession. He was intellectually a great man;

* John Fritz, of Bethlehem.

Digitized by Google

of deceit he knew nothing, and as he was possessed of a sweet and noble disposition, backed by a strong will power, he despised anything which was not clean and honest, with an intensity which only such natures are capable of doing. His name was a guarantee of good faith, energy, integrity, and stood for all that was fair between man and man.

"You can better imagine than I can describe my feelings over the loss of such a friend as Mr. Coxe. Taken, as it were, in the prime of life, our consolation is that the world was better for his having lived, and my earnest hope is that, when our time comes, we may feel that we have done some good in our lives and have not lived in vain."

No words seem more fitting in which to close this brief account of the life of our lamented friend and associate than those culled from a wreath of loving thoughts and deepest feelings, woven in most fitting words, by his warm personal friend, R. W. Raymond, and which on last Decoration Day were read to the assembled workmen beside his grave.

"True knight of love, in stainless armor bright,
Full clad, and ardent with all wrong to cope,
And wearing ever, in the front of fight,
The crested helm of Hope.

"True steward of the trust of earthly power,
Nor weak to waste, nor miserly to save;
But wisely using all until the hour
When He should ask Who gave.

"Strong to pursue the path by Science trod;
Strong to achieve what lies in human ken;
Yet strongest by thy steadfast faith in God
And in thy fellow-men."

Digitized by Google

DCLXII.

MEMORIAL NOTICES OF MEMBERS DECEASED DURING THE YEAR.

[NOTE.—Memorial monographs, with portraits of Messrs. Eckley B. Coxe and E. F. C. Davis, who have held the office of President in the Society, will be found as Articles No. 660 and 661, at pages 1177 to 1186 of this volume.]

OREN GIBSON HEILMAN.

Mr. Heilman was born February 6, 1866, at Muncy Station, Lycoming County, Pa. At an early period in his life his parents moved to Williamsport, Pa., in which place Mr. Heilman prepared for college.

He entered Cornell University in 1888 in the course of Mechanical Engineering, and graduated in 1891. The following year he was appointed to an instructorship in the Department of Experimental Engineering, Sibley College, which position he held until the time of his death. Mr. Heilman was admitted to junior membership in the American Society of Mechanical Engineers at the San Francisco meeting in the spring of 1892. His death was caused, on July 4, 1894, by the premature discharge of a small cannon, which he had built himself. The wound caused by the accident was not at the time considered severe, but in a few days lockjaw set in, after which the most skilful medical treatment was of no avail. His death occurred July 17, 1894.

Mr. Heilman was considered, by all who knew him, a most talented and promising young man. His work in the university was uniformly of an excellent character, and his graduating thesis, which was the description of a test made by himself and colleagues of the Utica Electric Railroad, was of such merit as to attract at the time favorable notice from those who knew of the character of the work.

In Sibley College, as an instructor, he had especial charge of the tests made on the large experimental engine, and he was entrusted with the general management of the engine at the time of the tests. The reducing motions of the experimental engines were designed principally by Mr. Heilman, and are of a specially

Digitized by Google

neat form, and are accurate and positive under every condition, indicating excellent mechanical ability on the part of the designer. He had responsible charge of some important constructions in Sibley College, and always performed his work in an excellent manner.

CHARLES ROBERTS JOHNSON.

Mr. Johnson was born in Northamptonshire, England, January 17, 1851. After leaving school in 1867, he served two years in the office of William Haywood, civil engineer to the Corporation of the City of London, as junior clerk. He was then articled to Mr. W. C. Johnson, who was city architect, where he remained two years, and left to enter the employ of Mr. Richard Head. Before leaving this position he was estimate clerk, and in charge of the erection and repairs of buildings. At twenty-three years of age he joined the firm of Stevens & Sons, of London and Glasgow, remaining with them about eighteen months as foreman in charge of the erection of railway-signal interlocking apparatus; and in 1875 he entered the employ of the firm of Saxby & Farmer, the well-known English firm of signalling engineers, with whom his uncle had been connected as superintendent. In this relation, Mr. Johnson was sent not only to different parts of the United Kingdom, but also to France and to India. In 1881 Mr. Johnson came to the United States upon the invitation of the Pennsylvania Railroad Company, at the recommendation of Messrs. Saxby & Farmer, with a special view to arranging a practical system of signals for the grade crossing of their line and that of the Central Railroad of New Jersey at Elizabeth.

It is interesting to note that from 1873, when Messrs. Toucey and Buchanan erected a system of switches and signals at the grade cross-over which was then used above Fifty-third Street, in New York City, and when, about the same time, the Pennsylvania Railroad introduced block signals controlled by telegraph, the success of the English builders and managers had not been more generally availed of. The Saxby & Farmer exhibit at the Centennial Exposition of 1876 was really the first opportunity that was given for a study of the device which they had so carefully thought out. The semaphore signal, now so wide-spread, was then almost unused in this country, and the arrangements of switch targets and so-called safety devices were innumerable and various. Mr. Johnson bringing to this country his experience with the then more exacting conditions of European traffic, was engaged

Digitized by Google

by the Union Switch and Signal Company, of Pittsburg, as contracting agent, and later general manager. He remained in this relation until 1888, when he separated from the parent company, and organized the Johnson Railroad Signal Company, of which he was president and general manager, with works located at Rahway, N. J. Failing health in 1892 compelled him to relinquish active business and withdraw to the Adirondack forest and lake region in pursuit of rest and out-door life, to overcome a consumptive tendency, but a long and sometimes painful illness ended in death, December 11, 1894, in his camp on Saranac Lake. He was buried in Rochester, N. Y. He connected himself with the Society at the Pittsburg meeting in 1884.

GEORGE FREDERICK SIMONDS.

Mr. Simonds was born in Fitchburg, Mass., January 12, 1843, receiving his education in the public schools. He entered his father's shops and office in West Fitchburg in 1859, doing all kinds of mechanical and clerical work during four years, except during the first year of the war, when he served in the army. The business of his father, Mr. Abel Simonds, was started in 1832, and was the making of scythes, knives, and reaping-machine steel. In 1864 Mr. Simonds organized the firm of Simonds Brothers and Company, operating in a leased shop, and in 1868 the Simonds Manufacturing Company was organized with a much larger capital. In 1878 the manufacture of saws replaced the agricultural knives on which Mr. Simonds' patents on the manipulation of steel had had great influence. In 1886 the Simonds Rolling Machine Company of Massachusetts and the Simonds Steel and Iron Forging Company of England were organized to avail of his patents for moulding articles of circular cross-section by rolling, and he was one of the early experimenters and successful manufacturers in the line of roller and ball bearings. He became a member of the Society at the Philadelphia meeting in 1887, and his death was due to an accident by falling from a transcontinental train while on his way to Alaska, November 3, 1894, in pursuit of health.

BENJAMIN F. RADFORD.

Mr. Radford was born at Portland, Me., October 11, 1827. He served his apprenticeship with the Amoskeag Machine Company, of Manchester, N. H., and also practised in New Jersey and

Digitized by Google

Pennsylvania. In 1850 he entered the employ of Geo. H. Fox & Co., Boston, the predecessors of the American Tool and Machine Company. The latter was organized in 1864, and Mr. Radford was chosen superintendent and general manager, and he was president at the time of his retirement. Under his management the company prospered, and were able to build shops which have formed important industries of the town of Hyde Park. Mr. Radford served his town in office as a member of its water company, and was connected with a number of its institutions. Mr. Radford was the mechanically responsible officer of his company, having taken out many patents for sugar machinery, conveyors, leather machinery, etc. He became a member of the Society in 1887, at the Washington meeting, and passed away November 27, 1894.

ALTON J. SHAW.

Mr. Shaw was born in Buckfield, Oxford Co., Maine, January 13, 1858. His father was a successful shoe contractor and manufacturer, and gave his son the benefit of education at Bates College at Lewiston, and at the Maine State College, from which he graduated in the mechanical engineering course in 1879. He had shown a mechanic's instincts while a boy and at school, and brought out several minor inventions previous to graduation.

His first opportunity after graduation was with the Chandler Water Meter Company, of Lewiston, where he remained until 1882, having married meanwhile. In 1882 he went into business for himself, but later accepted the tender to become superintendent with the firm of R. Gardner & Son, in Montreal. From 1883 to 1886 he served as draughtsman with the Yale & Towne Manufacturing Company and the Brown & Sharpe Manufacturing Company. From 1886 to 1889 he was in the service of the Edward P. Allis Company, of Milwaukee, and while engaged with them the necessity to redesign a foundry travelling crane was the occasion of the first of the Shaw electric cranes. From 1889 to 1891 he was manager of his company in Milwaukee, and later he became president and engineer of the transferred company at Muskegon, which was his home at the time of his death. Mr. Shaw became a member of the Society at the Chicago meeting in 1893, and passed away June 22, 1895, as the result of peritonitis.

Digitized by Google

CARROLL LIVINGSTON HOYT.

Mr. Hoyt was born January 22, 1866, at Wellsville, N. Y., from the Academy of which town he graduated to enter Cornell University. He received the degree of M. E. from Sibley College in 1892. Upon graduation he became assistant professor of mechanical engineering and director of the machine shops in the Michigan School of Mines, at Houghton. He afterwards was connected with the Dickson Manufacturing Company, at Scranton, and at the time of his death was draughtsman with the Edison General Electric Company, at Schenectady. His death, January 29, 1895, was due to typhoid fever. He had been connected as junior member with the Society since 1893.

CHARLES W. COPELAND.

Mr. Copeland, a life member of this Society, died at his home in Brooklyn, N. Y., on the 5th of February, 1895. He was a charter member of the Society; its treasurer from December, 1881, to November, 1884; vice-president from November, 1884, to December, 1886.

He was born in 1815 in Coventry, Conn., where his father was the proprietor of a large engine and boat building establishment. Here he got the first lessons of his professional life, which were subsequently supplemented by a course at Columbia College.

At the early age of twenty-one he was appointed superintendent of the West Point Foundry Association, and immediately thereafter began the design of the machinery of the *Fulton*, the first steam vessel of war constructed under the direct supervision of the United States Navy Department. After this design the machinery was built by the West Point Foundry.

In 1839 Mr. Copeland received an appointment from the United States Navy Commissioners, under which he signed himself Naval Engineer, and was entrusted with the designing of the machinery of the *Mississippi* and *Missouri*, that were, when built, fine examples of war steamers of their day. He subsequently drew the machinery of the *Susquehanna* and *Saranac*, and the engines of the *Michigan*, all very successful and efficient ships.

Mr. Copeland completed his permanent connection with the navy in the year 1850, about which time he was appointed superintendent of the Allaire Works in New York City, where he designed and superintended the construction of the machinery of many

Digitized by Google

vessels for the merchant marine, notably that of two of the Collins line of transatlantic steamers, whose ships broke the record of their day.

He was the first supervising inspector of steam vessels for the district of New York, and for many years a director and the consulting engineer of the Norwich and New York Transportation Company, designing several of the finest steamers of that line.

During the civil war his long experience in and knowledge of marine affairs were availed of by the United States Government in the adaptation of merchant vessels to service in the blockade of the Southern coast. He subsequently became the constructing engineer of the Lighthouse Board, holding this position nearly to the time of his death.

He commenced his life's work when there was much more of art than science in marine engineering. All knowledge therein had been gained step by step, in actual experience, and very little of it had been formulated and promulgated. Every designer was a law unto himself.

We, his successors, are living on the inheritance he and his contemporaries gained for us, and that perhaps without due recognition and acknowledgment.

He was a self-contained, undemonstrative man, but always genial in his manner.

He was simple and unaffected, frugal in his personal economy, temperate in his habits—almost to abstemiousness—a lover of books for what they contained, and a persistent collector of them.

He was indefatigably industrious, and his inclination for work continued to the end of his days.

He had deep interest in this Society, with which he had been so long connected, as certain provisions of his will display.

The world is better that he has lived, and our profession has a higher status because of his integrity, his fidelity, his self-respect, and his manhood.

LOREN PACKARD.

Mr. Packard was born at Northumberland, N. H., receiving his early education in the schools of Waterford and St. Johnsbury. While attending school the civil war broke out, and he was one of the first to defend the Union. He enlisted in the 1st Vermont Cavalry, serving four years. He was in the battle of Gettysburg, and was an eyewitness of the assassination of Presi-

Digitized by Google

dent Abraham Lincoln by John Wilkes Booth, in Ford's Theatre, Washington, on the night of April 14, 1865.

At the close of the war Mr. Packard went to Springfield, Mass., where he entered the Wason car factory, learning the car-building trade. He soon became foreman of the plant (1869), but resigned to accept the position of master car-builder of the shops of the N. Y., N. H. & H. R.R. Co., remaining at this place five years (1876–81). He was next offered the position of master car-builder of the shops of the Baltimore and Ohio road, at Baltimore. He accepted the offer, and remained with that company about three years (1884), when he secured the responsible position of master car-builder for the N. Y. C. & H. R. R.R., at West Albany, to succeed Mr. Hoyt, deceased.

Mr. Packard was an expert mechanic. During his eleven years of active service at West Albany he made many improvements on the cars of the road, and to him is largely due the credit for the high standard of excellence to which the cars of the New York Central road have attained.

Mr. Packard was always active in church affairs, and for four years acted as Superintendent of the First Presbyterian Sunday-school, at Albany, and at the time of his death was President of the West Albany Y. M. C. A.

Mr. Packard joined the Society in 1886, and died on February 15, 1895, in the forty-sixth year of his age, after an illness of seven weeks.

THOMAS RICHARD PICKERING.

Mr. Pickering was born in England, May 5, 1831, and came to the United States with his father when he was about nine years old. He attended the public schools in New York City until thirteen years of age, and then, for a short period, assisted his father, at that time engineer in the old Leonard Street Sugar House. During the serving of his apprenticeship he attended night school at Cooper Union, and following its completion became engineer at Robert Marcher's picture-frame factory in Twenty-sixth Street. While employed in that capacity, in 1861, he made the first Pickering governor, which was placed on a Fishkill Landing engine, the one giving power to the factory. His father at this time was the proprietor of a tea store, and for a time the manufacture of these governors was carried on by the inventor himself, on a foot-lathe, in the rear of the store.

Digitized by Google

In 1865 the father and uncle of his wife furnished money with which to establish a shop for their manufacture, in Greene Street. Soon after, his father-in-law withdrawing, Mr. Pickering formed a partnership with Mr. John P. Davis (an uncle of his wife), under the firm name of Pickering & Davis. They continued in business together for ten years (the early velocipedes being largely made by them), and in 1870 moved to Portland, Conn., and built a shop and foundry at that place. Mr. Davis retired from the business in 1877, and Mr. John H. Hall purchased a majority interest in the firm, which was then called T. R. Pickering & Co. This partnership continued until 1888, when the Pickering Governor Company was incorporated, the proprietorial interests remaining the same save in the purchase of a few shares by Mr. Richard H. Pascall, who had been for many years superintendent of the factory. Up to the time of Mr. Pickering's death there was no further change in the business, except in the acquirement of a small interest by Mr. Stephen H. Hall, secretary of the company. Mr. Pickering was president of the corporation, though taking no active part in its management.

His public life consisted for the greater part in his connection with the different expositions held throughout the world, commencing with the Paris Exposition of 1867, where he had charge of some of the mechanical exhibits. In Vienna, in 1873, he was assistant to the commissioner, and had charge of the Machinery Department (for the United States); at Philadelphia, in 1876, he was agent for the State of Connecticut; in Paris, in 1878, he was assistant to the commissioner, and had charge of American machinery; and at Melbourne, in 1882, he acted as agent of the United States. For these services he received generous and valuable testimonials.

He was for years universally respected in the town of Portland as one of its most prominent citizens, and his death will be very greatly felt in that community. He had never taken any special interest in politics, but in November, 1894, was nominated and elected senator from the Twenty-second District of Connecticut, taking his seat on January 9, 1895, and fulfilling his duties in that capacity up to within a few days of the time of his death. He was a member of the American Society of Mechanical Engineers from the beginning, and contributed some valuable matter to its *Transactions*. His death occurred just at the close of a two years' term of office as vice-president of the Society.

Digitized by Google

Mr. Pickering was twice married. He had two children by his first wife, both of whom died before him. His second wife, to whom he was married in 1859, and one grandson alone survive him.

CHARLES E. LIPE.

Mr. Charles E. Lipe, who joined the Society as a member on June 13, 1883, was born at Fort Plain, N. Y., on March 20, 1851, and died at his home in Syracuse, after a brief illness, on March 17, 1895. His preparation for entering college was gained in the common school and at the seminary in his native village, and such as a farmer's son can acquire at home; and he was one of the six hundred who entered Cornell University at its opening in 1868. His course was that known then as "Mechanic Arts," and although he graduated as Bachelor of Mechanical Engineering in 1873, the course was originally designed to be, and was, in a great measure, a practical one.

Being possessed of the rare combination of a mechanical mind and a commercial one, his every move in study and work, invention and design, partook of the practical. From some cause one of the first machines set at work at the university was a Brown & Sharpe milling machine, and in his work, which was usually experimental, his sole machine tools were a milling machine and foot lathe; and from the first day of his mechanical experience to the last, where the first thought of other mechanics would be, "What part of this can I do in the lathe?" with Mr. Lipe the question was, What part of this can I do with a milling machine? and ten or fifteen years before others seemed to realize the fact, or while others insisted that the milling machine was adapted to small work and not to large, his frequent remark was, "That no one knew, because no one had ever built a milling machine for large work." While he became known to the mechanics of the country through his milling machine, his first work after leaving the university was with the civil engineers on the U. I. & E. R.R., afterwards with the Bradley Company of Syracuse and the Remington Company of Ilion, perfecting the Spooner Water Meter, and its Foundry Moulding Machines for its manufacture.

He was then engaged for several years in the inventing, building, and introducing broom-making machinery, having invented the first successful machine for sewing brooms, during which time he located his shop in Syracuse, and devised, among other things, the milling machine known by his name.

Digitized by Google

While Mr. Lipe did not possess the faculty of turning the baser metals into gold, he was the prime factor in turning the crude invention of others into working machines. The Marvin Electric Rock Drill, The Moyer Hub Boring Machine, The Engelberg Rice and Coffee Huller, and other Syracuse industries owe their success to his mechanical skill, and the far more rare quality, that of machine designer.

He died in what appeared to be the prime of life, with a broad field of work in anticipation. He had the designs partly developed for what he conceived to be a milling machine for large work, with features as original in conception as the machine was to be unique in size.

JOHN H. WEBSTER.

The loss of such a man as Mr. Webster is deeply felt. The story of his life is marked by youthful determination, ability, and actual accomplishment. He was born in Boston in 1850. At the age of fourteen years he commenced his mechanical career, having graduated from the high school at Medford, Mass., the year previous. He first spent about four years in a machine shop, then a year at pattern-making, and at the age of nineteen was a member of a firm of pattern-makers. At twenty he was in charge of works manufacturing artificial stone. A few years were then spent in designing and building general machinery, after which he was made chief draftsman at the Standard Sugar Refinery of Boston. He was assistant superintendent three years, then superintendent until the formation of the American Sugar Refining Company, of which he was made superintending and constructing engineer, holding that position at the time of his death.

He joined the Massachusetts Charitable Mechanics' Association in January, 1882. He was on the Board of Government three years, and at the exhibition in 1887 acted as assistant to the manager, Mr. Haynes. He became a member of the American Society of Mechanical Engineers in May, 1885.

His devotion to the interests committed to his charge was incessant and unremitting. He was a noble example of sterling manhood, faithful to every trust, beloved by all who knew him.

He died in New York, after a brief illness, at the age of forty-five years. His funeral services were held at his residence in Roxbury, Mass. His father and one son survive him.

Digitized by Google

EDWARD CLEMENT FRENCH.

Mr. French was born February 18, 1858, in Bergen, N. J. He prepared himself for his life work by special courses in chemistry at Harvard College and at Worcester Institute in 1882–83, and in the latter year became assistant to the Superintendent of the Deseronto Chemical Works, and afterwards manager, making a specialty of the distillation of wood, the manufacture of acetic acid, the acetates, wood alcohol, etc., and also superintending the Deseronto Gas Company, which was owned by the Rathbun Company of Deseronto. The planning and superintending of the plant and buildings for these two undertakings were almost entirely the work of Mr. French. He became connected with the Society at the Erie meeting, in May, 1889, and died April 19, 1895, after nearly two years of failing health, as a consequence of consumption.

ARTHUR MELLEN WELLINGTON.

Mr. Wellington was born in Waltham, Mass., December 20, 1847. He graduated in 1863 from the Boston Latin School, and for three years was apprenticed as an articled student to Mr. John B. Henck, of Boston, well known as the author of the *Handbook for Engineers*. He passed an examination for the navy as assistant engineer, but was never assigned to duty, by reason of the close of the civil war. From 1868 to 1873 he was engaged in railway work, in which his principal reputation was won. In 1878 he became principal assistant to Mr. Charles Latimer, Chief Engineer of the New York, Pennsylvania, and Ohio Railway, and it was in the summer of that year that, by the courtesy of Mr. Charles Paine, Chief Engineer and General Manager of the Lake Shore and Michigan Southern Railroad, Mr. Wellington was enabled to make an extended series of experiments on the resistance of rolling stock, and also upon journal friction. From 1881 to 1884 he was engineer, first, of the Mexican National Railway, and later of the Mexican Central Railway.

Mr. Wellington, however, has been most widely known from his connection with the literary side of engineering. His first book, issued in 1874, entitled *The Computation of Earthwork from Diagrams*, was succeeded by his monumental volume upon the *Economic Theory of the Location of Railways*. This was developed from a series of articles in the *Railroad Gazette* in

Digitized by Google

1876 into a small duodecimo in 1877, and in 1887 the larger and more comprehensive second edition redeemed the promise of the earlier one, which was itself an achievement. In 1884, upon his return from Mexico, Mr. Wellington became one of the editors of the *Railroad Gazette*, and in 1887 he became part owner and one of the editors of *Engineering News*, combining with the duty occasional service as consulting engineer upon important works. He connected himself with this Society in 1889, although his principal professional interest lay in the field of civil engineering.

Mr. Wellington was a man of indomitable energy, and with a physique which he seemed to be able to strain without injury far beyond the limits permitted to most persons. His industry was tremendous, but his devotion in the last years of his life to a special mechanical problem resulted ultimately in his being compelled, in 1894, to abandon his work for a trip to Europe. After a successful operation in May, he died of heart failure, May 16, 1895.

WILLIS C. JONES.

Mr. Jones entered the profession of mechanical engineering through the practical side. He began his apprenticeship at the Chapman Valve Company of Springfield, Mass., and served as journeyman and tool-maker for nine years with New England firms engaged in manufacturing of steam and hydraulic machinery. Going West, he entered the Rose Polytechnic Institute at Terre Haute, Ind., first as workman, rising to foreman, and later to become instructor; from thence he moved to Cincinnati, and engaged with Lodge, Barker & Co., the Universal Radial Drill Company, and as superintendent of the firm P. G. March & Co. At the time he connected himself with the Society at the Philadelphia meeting in 1887, he was a member of the firm Jones & Rogers, of the latter city, and since that time has been in various individual relations in different cities. Failing health compelled him to retire to his old home in Massachusetts, and he died at Barnstable, August 19, 1895.

RALPH HART TWEDDELL.

Mr. Tweddell is best known in America for the active part he has taken among the English tool-builders in the development of hydraulic tools. He was born at South Shields, in England, May 25, 1842, and was at first prepared at school for the Royal Military Academy at Woolwich. His strong mechanical bent led to his

Digitized by Google

abandoning a military career, and he became an apprentice with R. & W. Hawthorn, at Newcastle. His first patent, in 1863, for a hydraulic-tube fixer, was taken while articled in the shop.

The first hydraulic riveter was begun in 1865, when the increasing steam pressures in use at sea made increased difficulty in working with the thicker plates. This first machine operated with a pressure of 1,500 pounds per square inch, and did the work at about one-seventh the cost of the previous hand-work. This machine had a small accumulator, which fell with each stroke of the lever, producing an intensified pressure at the moment of tightest closure. It has been estimated that these hydraulic riveters are considerable factors in the increase of pressures within the last thirty years from 40 to 200 pounds of working pressure. In 1871 Mr. Tweddell designed his portable riveter, and from 1873 forward much of the largest and heaviest riveted work on bridges has been done by his machines or their derivatives. A writer in *London Engineering* says that a speed of 20 rivets per minute can be obtained, and 5,000 in 9½ hours, on straight work, or a steady average of from 1,800 to 2,000 in irregular work, with a saving of from 50 to 60 per cent. over hand work.

The hydraulic system extended itself in 1876 to the shipyards in France, to the locomotive and railway shops of the United Kingdom, and has served as suggestions for much of the hydraulic machinery constructed in America.

Mr. Tweddell received the Telford medal from the Institution of Civil Engineers of Great Britain for his paper on hydraulic tools and appliances, and the Bessemer premium and the medal from the Society of Arts. He exhibited in Philadelphia in 1876, in Paris in 1878, and his last honor was the John Scott medal from the Franklin Institute of Philadelphia. He became a member of this Society at the Chicago Convention in 1893, and was connected also with the engineering societies of his own country and of France. He died September 3, 1895.

Digitized by Google

Digitized by Google

GENERAL INDEX TO VOLUME XVI.

[NOTE.—Names of authors and debaters are printed in SMALL CAPS; titles of papers are printed in *italic type*.]

PAGE

ADAMS, W. H., tests on heat changes in cylinder walls 446
ALDRICH, W. S., disc., boiler and engine plants 600
ALLISON, ROBERT, *the old and the new*, 742; disc., a new shaft governor.. 733
Annealings of forgings 235
Analysis of the Tremont turbine, De Volson Wood 707
ANGUS, ROBT., disc., new form friction brakes 823
Application of brakes to the truck wheels of a locomotive, Gaetano Lanza.... 69
ARMSTRONG, E. J., a new shaft governor 729
Asphalt for iron and steel coating 679
Axles, strength of 237

BALL, F. H., disc., trials of a recent compound engine 184
BARNES, D. L., *rail pressure of locomotive driving wheels*, 249; disc., counterbalance in locomotive drive-wheels, 338; distribution of moisture in steam, 1034; efficiency of boilers, 999; Keep's cooling curves, 1134; piece-rate system, 891; thickness gauges for metals, 642; transverse strength of cast iron 1112
BARR, J. H., *experiments on a system of governing by compression*, 430; disc., counterbalance in locomotive drive-wheels 330
BARRUS, G. H., disc., efficiency of boilers 969
BEMENT, C. E., disc., a piece-rate system 894
Berthelot calorimeters 1050
BINSSE, H., disc., piston valves, 161; milling machine and planer 1168
BISSELL, G. W., disc., filtering oil 1176
BOYER, F. H., disc., coatings for iron and steel 416
BRASHEAR, JNO. A., disc., a new shaft governor 736
Brakes on locomotive trucks 69
BRILL, G. M., *pipe-covering tests*, 827; disc., tests on engine at Sibley College 959
BRYAN, W. H., *the down-draft furnace for steam boilers*, 778; disc., efficiency of boilers, 987; combined electric light and railway station.... 1159
BULL, STORM, disc., combined electric light and railway station 1159

Calorimeters, tests of 448, 1040
Cam for actuating valves of high-speed steam engines 117
Car axles, strength of 237
Carbon paints 696
CARPENTER, R. C., *the effect of length of specimen on the percentage of extension*, 904; *force required and work performed in driving and pulling cut and wire nails*, 1002; *new coal calorimeter*, 1040; *tests made on the experimental engine of Sibley College*, 915; disc., throttling calorimeters, 467; efficiency of boilers, 989; distribution of steam, 1029; transverse

Digitized by Google

PAGE

strength of cast iron, 1110; Hawley down-draft furnace, 798; combined electric light and railway station, 1159; pipe-covering tests..... 853
CARTWRIGHT, ROBERT, disc., coatings for iron and steel, 416; tests of cast iron 576
Cast iron, tests of 542, 1066, 1082
" " shrinkage of..... 1117
Changing the suction system of a pumping engine, F. W. Dean..... 40
CHASE, W. L., disc., forms of filing cabinets..... 613
CHILDS, ARTHUR E., disc., electric tramways 527
Chimney, straightening of 75
CLARK, WALTON, disc., forms of filing cabinets..... 621
Coal calorimeter..... 1040
Committee on fireproofing tests..... 639
" " standard methods of tests..... 640
" " standard thickness gauge for metals..... 641
COPELAND, CHARLES W., memorial notice of 1191
Comparison of automatic cut-off and throttling regulation on compound and triple-expansion engines, Chas. T. Porter..... 111
Compound engine, test of..... 179
" engines, proportions..... 763
Compression as method of governing..... 430
Corrosion of iron..... 663
Counterbalance, effect of..... 286–305
COXE, ECKLEY B., in memoriam 1182
CRUIKSHANK, BARTON, disc., forms of filing cabinets..... 617

DAVIS, E. F. C., disc., efficiency of boilers, 1001; coatings for iron and steel, 422; electric tramways, 526; new forms of friction brakes, 825; throttling calorimeters, 475; planer and milling machine, 1172; in memoriam 1177
DEAN, F. W., *changing the suction system of a pumping engine*, 40; *trials of Leavitt pumping engine at Louisville*, 169; *trials of a recent compound engine with a cylinder ratio of 7 to 1*, 179; *efficiency of boilers, a criticism on the Society's code of reporting boiler trials*, 962; disc., cams for steam-engine valve-gear, 163; counterbalance in locomotive drive-wheels.... 321
DENTON, JAS. E., disc., efficiency of boilers..... 984
Description of a cam for actuating the valves of high-speed steam engines, C. T. Porter..... ... 117
Description of an improved centrifugal governor and valve, C. T. Porter.... 134
Description of improved forms of steam separator, steam jacket, and reheater, Chas. T. Porter..... 137
Description of new form of sterilizer, A. M. Goodale..... 659
Disinfecting plant..... 655
Drawing-office appliances, A. W. Robinson..... 106
Driving wheels, effect of on rails 249
DOW, ALEXANDER, disc., Hawley down-draft furnace 795
Down-draft furnace for steam boilers, W. H. Bryan..... 773
DU BOIS, A. J., disc., moment of inertia..... 497
DURFEE, W. F., disc., coatings for iron and steel, 418; illuminating gas, 629; strength of car axles, 243; tests of cast iron 576
Dynamometers, new forms of..... 806

Digitized by Google

PAGE

Efficiency of boilers, a criticism of the Society's code of reporting boiler trials, F. W. Dean 962
Effect of length of specimen on the percentage of extension, R. C. Carpenter.. 904
Electric railway tests 1142
" device for indicators 960
" tramways 504
EMERY, CHAS. E., disc., boiler and engine plants, 605; trials of a recent compound engine, 198; the use of the decimal thickness gauge, 84; vertical triple-expansion pumping engine 55
ESTRADA, E. D., disc., tests of cast iron, 568; strength of car axles 242
Expansion bearings for bridge superstructures, second paper, George S. Morison 724
Experiments on a system of governing by compression, J. H. Barr 430
Experimental study of the effect of the counterbalance in locomotive drive-wheels upon the pressure between wheel and rail, W. F. M. Goss 305

FAWCETT, EZRA, disc., the old and the new, 752; a new shaft governor 737
FIELD, C. J., *present and prospective development of electric tramways* 504
Filing cabinets for clippings 610
Fire-proofing tests 639
Fly-wheels, strains in 208
Force required and work performed in driving and pulling cut and wire nails, R. C. Carpenter 1002
Forgings, notes on steel 228
FORNEY, M. N., disc., cams for steam engine valve gear, 163; counterbalance in locomotive drive-wheels, 317; monthly meetings of Society. 27
Forgings of steel 228
FORSYTH, WILLIAM, disc., counterbalance in locomotive drive-wheels 326
FRANCIS, W. H., *a portable disinfecting plant* 655
FRENCH, EDWARD CLEMENT, memorial notice of 1197
FRITZ, JOHN, disc., tests of cast iron 576
FRY, A. B., disc., boiler and engine plants 608

GABRIEL, W. A., *a T-square and its mountings* 651
Galvanizing of iron 357
GANTT, H. L., disc., monthly meetings of Society, 30; a piece-rate system. 883
Gas from carbide of calcium 625
GILLIS, H. A., disc., illuminating gas 630
GOBEILLE, J. L., disc., a piece-rate system 897
GOODALE, A. M., *description of a new form of sterilizer* 659
GOSS, W. F. M., *an experimental study of the effect of the counterbalance in locomotive drive-wheels upon the pressure between wheel and rail*, 305; *new forms of friction brakes*, 806; disc., combined electric light and railway station, 1158; distribution of moisture in steam 1033
Governor, a new shaft 729
" an improved centrifugal 134
Graphical method of designing springs, Geo. R. Henderson 92

HALE, R. S., disc., electric tramways, 522; trials of a recent compound engine 202
HALSEY, F. A., disc., a piece-rate system, 884; forms of filing cabinets ... 621

Digitized by Google

PAGE

HART, C. E., disc., monthly meetings of Society 31
HAWKINS, J. T., disc., coatings for iron and steel, 423 ; tests of cast iron .. 581
Hawley furnace 773
Heat, effect of, on tensile strength of iron 739
HEILMAN, OREN GIBSON, memorial notice of 1187
HENDERSON, G. R., *a graphical method of designing springs*, 92 ; disc., counterbalance in locomotive drive-wheels, 332 ; drawing-office appliances, 109 ; strength of car axles 241
HENNING, G. C., disc., a piece-rate system, 898 ; coatings for iron and steel, 416 ; driving cut and wire nails, 1015 ; effect of length of specimen on percentage of extension, 911 ; efficiency of boilers, 1000 ; electric tramways, 517 ; expansion bearings, 727 ; iron affected by tensile stress, 741 ; Keep's cooling curves, 1137 ; moment of inertia, 498 ; new coal calorimeter, 1058 ; new forms friction brakes, 824 ; pipe-covering tests, 854 ; presents report on tests and testing materials, 640, 1066 ; strength of car axles, 244 ; tests of cast iron, 575 ; thickness gauge for metals, 643 ; transverse strength of cast iron 1111
HIBBARD, H. WADE, disc., strength of car axles 247
HILL, GEORGE, disc., amendments to rules of Society 28
HOLLOWAY, J. F., disc., monthly meetings of the Society, 29 ; relative tests of cast iron, 579 ; old and new, 755 ; piece-rate system, 897 ; efficiency of boilers 1000
HOLMAN, M. L., disc., Hawley down-draft furnace, 801 ; invites Society to St. Louis 644
Horse-power planimeter, E. J. Willis 1161
HOYT, CARROLL LIVINGSTON, memorial notice of 1191
HUNT, R. W., disc., efficiency of boilers 998
HUNTING, A. A., disc., efficiency of boilers 1001
HUTTON, F. R., disc., amendments to rules of Society, 19 ; moment of inertia, 493 ; proportioning cylinders of compound engines, 770 ; the old and the new, 754 ; thickness gauge for metals 643

Indicators, electric device for 960
Inertia, moment of 477
Improved centrifugal governor and valve, C. T. Porter 134
" *forms of steam separator, steam jacket, and reheater*, C. T. Porter. 137
Illuminating gas from CaC 625

JACOBUS, D. S., *results of measurements to test the accuracy of small throttling calorimeters*, 448 ; *tests to show the distribution of moisture in steam when flowing through a horizontal pipe*, 1017 ; disc., efficiency of boilers, 986 ; governing by compression, 445 ; horse-power planimeter, 1166 ; new coal calorimeter, 1061 ; new forms of friction brakes, 819 ; pulleys and fly-wheels, 226 ; tests on the triple engine, 90 ; throttling calorimeters 463
JACKSON, D. C., *tests of a combined electric light and electric railway central station* 1142
JAQUES, W. H., disc., forms of filing cabinets 617
JOHNSON, J. B., disc., moment of inertia, 495 ; transverse strength of cast iron, 1107 ; Keep's cooling curves 1132

Digitized by Google

PAGE
JOHNSON, CHAS. R., memorial notice of 1188
JONES, WASHINGTON, disc., the old and the new 757
JONES, WILLIS C., memorial notice of 1198

Keep's cooling curves—a study of molecular changes due to varying temperatures, W. J. Keep 1117
KEEP, W. J., *relative tests of cast iron*, 542; *transverse strength of cast iron*, 1082; *Keep's cooling curves*, 1117; disc., combined electric light and railway station, 1159; tests of cast iron 587
KENT, WM., disc., coatings for iron and steel, 420; combined electric light and railway station, 1156; counterbalance in locomotive drive-wheels, 331; distribution of moisture in steam, 1032; efficiency of boilers, 1000; graphical method of designing springs, 103; Hawley down-draft furnace, 797; illuminating gas, 628; Keep's cooling curves, 1135; milling machine and planer, 1171; new coal calorimeter, 1064; new forms friction brakes, 823; piece-rate system, 890; pipe-covering tests, 851; proportioning cylinders of compound engines, 768; pulleys and fly-wheels, 224; steel forgings, 235; tests of cast iron, 580; tests on engine at Sibley College, 958; thickness gauge for metals, 642; trials of a recent compound engine, 201; throttling calorimeters 462
KERR, C. V., *theory of the moment of inertia*, 477; disc., efficiency of boilers 982
KNAPP, E. C., *method of proportioning cylinders for compound engines* ... 762

LAIRD, J. A., disc., Hawley down-draft furnace 800
LANZA, GAETANO, AND MILLER, E. F., *some tests of the strength of spruce columns* 56
LANZA, GAETANO, *application of brakes to the truck wheels of a locomotive*, 69; *stresses in the rims and rim joints of pulleys and fly-wheels*, 208; disc., counterbalance in locomotive drive-wheels, 322; moment of inertia 495
Lead paints 693
Leavitt dynamometers 821
Leavitt pumping engine at Louisville, Ky., F. W. Dean 169
LIPE, CHARLES E., memorial notice of 1195
Locomotive pistons 256

MAGRUDER, WM. T., disc., forms of filing cabinets 615
Mahler calorimeter 1052
MCELROY, SAMUEL, disc., coatings for iron and steel 421
MCGEORGE, JOHN, disc., counterbalance in locomotive drive-wheels 323
MEIER, E. D., disc., efficiency of boilers, 979; distribution of moisture in steam, 1029; Hawley down-draft furnace, 799; invites Society to St. Louis, 644; thickness gauge for metals 642
Memorial notices of members deceased during the year 1187
Method of proportioning cylinders for compound engines, E. C. Knapp 762
MILLER, E. F., *some tests of the strength of spruce columns*, 56; *tests of the triple engine at Massachusetts Institute of Technology* 82
MILLER, FRED. J., disc., planer and milling machine 1173
MILLER, SPENCER, disc., forms of filing cabinets 610
Moment of inertia, theory of 477

Digitized by Google

PAGE
Monthly meetings of Society 27
MORISON, GEO. S., *expansion bearings for bridge superstructures*, second paper, 724; disc., counterbalance in locomotive drive-wheels 318
MUMFORD, E. H., disc., tests of cast iron 574

NAGLE, A. F., disc., efficiency of boilers, 977; Hawley down-draft furnace, 796; pipe-covering tests, 848; the old and the new, 753; Tremont trubine 719
NEWCOMB, C. L., disc., monthly meetings of Society 30
New coal calorimeter, R. C. Carpenter 1040
Non-conducting coverings, tests of 827
New forms of friction brakes, W. F. M. Goss 806
New shaft governor, E. J. Armstrong 729
Notes on steel forgings, G. M. Sinclair 228
NORTON, CHAS. H., disc., a piece-rate system, 900; thickness gauge for metals, 642; planer and milling machine 1173

Oil-tempering of forgings 283
Old and the new, Robert Allison 742

PACKARD, LOREN, memorial notice of 1192
Paint tests 390
PARSONS, H. DE B., disc., counterbalance in locomotive drive-wheels, 328; strength of car axles, 244; efficiency of boilers 973
PARTRIDGE, W. E., disc., electric tramways 520
PEABODY, C. H., AND MILLER, E. F., *tests on the triple engine at the Massachusetts Institute of Technology* 82
PENTON, J. A., disc., a piece-rate system 888
PERRY, NELSON W., disc., electric tramways 522
Piece-rate system, being a step towards a partial solution of the labor problem, F. W. Taylor 856
PICKERING, THOMAS RICHARD, memorial notice of 1193
Pigments, action of 663
Pipe-covering tests, G. M. Brill 827
PLATT, JOS. C., *straightening a leaning chimney 100 feet high*, 75; disc., amendments to rules of Society, 20; electric tramways, 529; Keep's cooling curves, 1138; trials of a recent compound engine, 202; a piece-rate system, 896; efficiency of boilers 995
PLATT, JNO., disc., coatings for iron and steel, 419; electric tramways, 529; tests of cast iron 577
POMEROY, L. R., disc., strength of car axles 243
Portable disinfecting plant, W. H. Francis 655
PORTER, CHAS. T., *description of a cam for actuating the valves of high-speed steam engines*, 117; *description of an improved centrifugal governor and valve*, 134; *description of an improved form of steam separator, steam jacket, and reheater*, 137; *comparison of the action of a fixed cut-off and throttling regulation with that of the automatic variable cut-off on compound and triple-expansion engines*, 111; disc., counterbalance in locomotive drive-wheels 322
POTTER, W. B., disc., efficiency of boilers 996

Digitized by Google

PAGE

Proceedings Detroit meeting (XXXIst.) 635
" of New York meeting 8
Present and prospective development of electric tramways, C. J. Field 504
Pumping engine, test of 49, 169
Pump-suction under pressure 40

RADFORD, BENJAMIN F., memorial notice of 1189
Rail pressures of locomotive driving wheels, D. L. Barnes 249
RANDOLPH, L. S., *strength of railway car axles*, 237; disc., a graphical method of designing springs 103
REARICK, C. B., disc., combined electric light and railway station, 1157; pipe-covering tests 852
Relative tests of cast iron, W. J. Keep 542
Report of committee on standard thickness gauges for sheet and wire, New York, 1894 ..... 32, 641
Report of committee on tests and testing materials, New York, 1894 ..... 25, 1066
Results of measurements to test the accuracy of small throttling calorimeters, D. S. Jacobus 448
RICHARDS, C. B., disc., new Porter steam engine 152
RICHARDS, FRANCIS H., monthly meetings of Society 30
RICHTER, A. W., *tests of combined electric light and railway station* ... 1142, 1160
ROBINSON, A. W., *drawing office appliances* 106
ROCKWOOD, GEO. I., disc., trials of a recent compound engine, 189; combined electric light and railway station, 1158; new Porter steam engine, 156; electric tramways, 538; the old and the new, 753; proportioning cylinders of compound engines, 767; Hawley down-draft furnace, 802; new forms friction brakes, 819; tests on engine at Sibley College, 959; efficiency of boilers 992
ROELKER, H. B., disc., coatings for iron and steel 418
ROGERS, W. S., disc., a piece-rate system, 889; milling machinery, 1172; pipe-covering tests, 854; Keep's cooling curves 1135
ROYSE, DANIEL, disc., distribution of moisture in steam 1034
Rustless coatings for iron and steel—galvanizing, electric-chemical treatment, painting, and other preservative methods, M. P. Wood, second paper, 350; ditto, third paper 668

SCHEFFLER, F. A., disc., efficiency of boilers, 978; electric tramways 525
SCHEFFLER, T. F., disc., boiler and engine plants 590
SCOTT, OLIN, disc., the old and the new 749
Separator, form of 137
Shaft governor, a new 727
SHAW, ALTON J., memorial notice of 1190
SIMONDS, G. F., memorial notice of 1189
SINCLAIR, G. M., *notes on steel forgings* 228
SMITH, J. M., disc., combined electric light and railway station, 1157; proportioning cylinders of compound engines 769
SMITH, OBERLIN, disc., amendments to rules of Society, 25; boiler and engine plants, 605; counterbalance in locomotive drive-wheels, 319 and 324; electric tramways, 520; forms of filing cabinets, 619; improved form steam separator, 159; the use of the decimal thickness gauge 84

Digitized by Google

PAGE
SORGE, A., disc., transverse strength of cast iron 1113
Springs, designing of 92
Spruce columns, tests of 56
STANWOOD, J. B., disc., proportioning cylinders 767
Steam jacket, form of 137
STEARNS, ALBERT, disc., pipe-covering tests, 858; combined electric light and railway station 1157
Steel forgings 228
STETSON, G. H., disc., combined electric light and railway station 1157
Straightening a leaning chimney 100 *feet high*, Jos. C. Platt 75
Strength of railway car axles, L. S. Randolph 237
Strength of iron as affected by tensile stress while hot. De Volson Wood 739
Stresses in the rims and rim joints of pulleys and fly-wheels, Gaetano Lanza. 208
STRONG, GEO. S., disc., counterbalance in locomotive drive-wheels 319
Sterilizer, new form of 659
Sublimed lead for iron and steel coating 689
Subway conduits 517
SUPLEE, H. H., disc., boiler and engine plants 608
SWEET, JNO. E., disc., driving and pulling nails, 1015; a new shaft governor 735

T-square and its mountings, W. A. Gabriel 651
TAYLOR, F. W., *a piece-rate system, being a step towards a partial solution of the labor problem*, 856; disc., Hawley down-draft furnace, 799; pipe-covering tests 844
Telephone systems for manufactories 623
Tests made on the experimental engine of Sibley College, Cornell University, R. C. Carpenter 913
Tests of a combined electric light and electric railway central station, D. C. Jackson 1142
Tests of the strength of spruce columns, Gaetano Lanza and E. P. Miller. .. 56
Tests to show the distribution of moisture in steam when flowing through a horizontal pipe, D. S. Jacobus 1017
Tests on the triple engine at the Massachusetts Institute of Technology, C. H. Peabody and E. F. Miller 82
Tests and testing materials 1066
Tramways, electric 504
Transverse strength of cast iron, W. J. Keep 1082
Trial of Leavitt pumping engine at Louisville, F. W. Dean 169
Trials of a recent compound engine with a cylinder ratio of 7 *to* 1, F. W. Dean 179
Trial of a vertical triple-expansion pumping engine of the Trenton Iron Works, Samuel Webber and S. S. Webber 49
Theory of the moment of inertia, C. V. Kerr 477
Thickness gauge, report on 32, 641
THOMSON, JOHN, disc, cams for steam-engine valve-gear 164
Throttling *vs.* cut-off regulation 111
THURSTON, R. H., disc., driving cut and wire nails, 1013; efficiency of boilers, 971; governing by compression, 443; new coal calorimeter, 1056; new Porter steam engine, 153; trials of recent compound engine. 183

Digitized by Google

PAGE
Topical discussions and interchange of data..... 590, 1168
TOWL, FORREST M., disc., changing the suction system of a pumping engine..... 44
Tremont turbine..... 707
TWEDDELL, R. H., memorial notice of..... 1198

WAGNER, J. R., disc., efficiency of boilers..... 976
WARNER, W. R., disc., boiler and engine plants, 604; monthly meetings of Society, 31; piece-rate system..... 900
WEBB, J. B., disc., counterbalance in locomotive drive-wheels..... 319
WEBBER, SAMUEL, and WEBBER, S. S., *trial of a vertical triple-expansion pumping engine of the Trenton Water Works*..... 49
WEBBER, SAMUEL, disc., the old and the new..... 745
WEBBER, W. O., disc., efficiency of boilers..... 974
WEBSTER, JOHN H., memorial notice of..... 1196
WELLINGTON, ARTHUR MELLEN, memorial notice of..... 1197
WEST, THOMAS D., disc., tests of cast iron..... 571
WHEELER, S. S., disc., the use of the decimal thickness gauge..... 35
WHITNEY, E. H., disc., new forms friction brakes..... 822
WILLIS, E. J., *horse-power planimeter*, 1161; disc., distribution of moisture in steam, 1034; new forms friction brakes..... 824
Winans' cam motion..... 163
WOOLSON, O. C., disc., boiler and engine plants..... 607
WOOD, DE VOLSON, *analysis of the Tremont turbine*, 707; *the strength of iron as affected by tensile stress while hot*, 739; disc., moment of inertia, 494; coatings for iron and steel..... 425
WOOD, M. P., *rustless coatings for iron and steel—galvanizing, electric-chemical treatment, painting, and other preservative methods*, second paper, 350; *rustless coatings for iron and steel*, third paper, 668; disc., illuminating gas, 625; strength of car axles, 247; tests of cast iron..... 577
WOODBURY, C. J. H., disc., drawing office appliances, 108; telephone systems..... 623
WORTHEN, W. E., disc., old and new..... 747
WRIGHT, LOUIS S., disc., forms of filing cabinets..... 628

Digitized by Google

Digitized by Google

TRANSACTIONS

OF THE

AMERICAN SOCIETY

OF

MECHANICAL ENGINEERS.

VOL. XVI.

1895.

NEW YORK CITY:
PUBLISHED BY THE SOCIETY,
FROM THE LIBRARY BUILDING,
No. 12 WEST THIRTY-FIRST STREET.
1895.

Digitized by Google

Digitized by Google

Digitized by Google

Digitized by Google

Digitized by Google

Digitized by Google

Digitized by Google

Digitized by Google

NON-CIRCULATING
DO NOT REMOVE
FROM LIBRARY

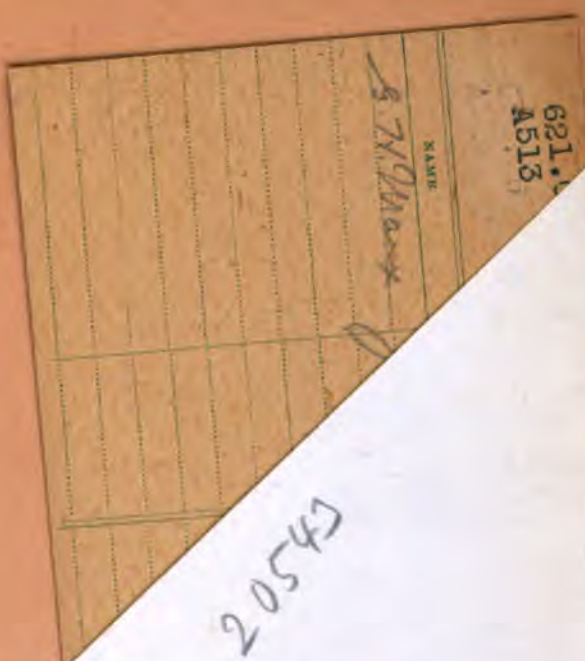

20543

Digitized by Google

Digitized by Google

NON-CIRCULATING
DO NOT REMOVE
FROM LIBRARY

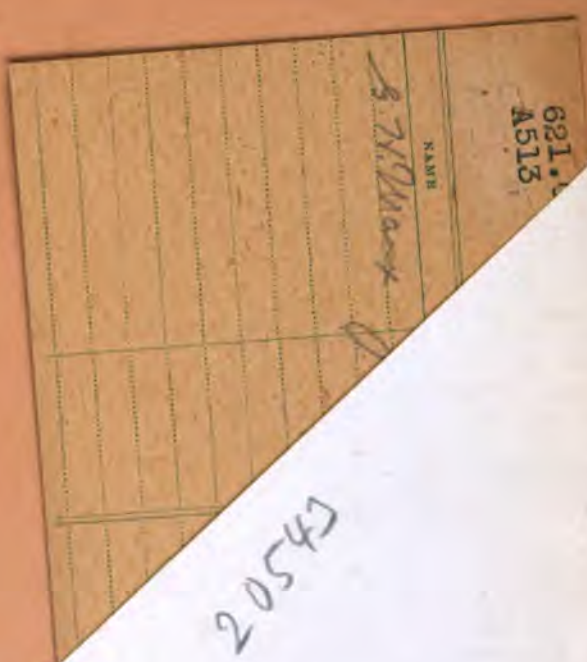

20543

Digitized by Google

Digitized by Google